IDENTIFICATION STAMP
DIV. OF THE STATE ARCHITECT
APP: 01-119031 INC:
REVIEWED FOR
SS ☑ FLS ☑ ACS ☑
DATE: 10/22/2020

LAS POSITAS TEMPORARY FACULTY VILLAGE MODULAR OFFICES

Las Positas Community College
Livermore, CA

FOR CONSTRUCTION

08.28.2020

VOLUME 1

LPAS

2484 Natomas Park Drive Suite 100 Sacramento CA 95833
916 443 0335 lpasdesign.com Architecture + Design

Project # 863-0005

A0.00s

ABBREVIATIONS & CHARACTER SYMBOLS

#	POUND OR NUMBER
&	AND
(E)	EXISTING
(N)	NEW
@	AT
L	ANGLE
Ø	DIAMETER OR ROUND
℄	CENTERLINE
℘	PROPERTY LINE
A.C.	ASPHALT CONCRETE
A.C.P.	ALUMINUM COMPOSITE PANEL
A.D.	AREA DRAIN
A.F.F.	ABOVE FINISH FLOOR
A.L.S.	ASSISTED LISTENING SYSTEM
ACOUS.	ACOUSTICAL
ADJ.	ADJUSTABLE *OR* ADJACENT
AGGR.	AGGREGATE
ALUM.	ALUMINUM
APPROX.	APPROXIMATELY
ARCH.	ARCHITECTURAL
ASB.	ASBESTOS
ASPH.	ASPHALT
BD.	BOARD
BITUM.	BITUMINOUS
BLDG.	BUILDING
BLK.	BLOCK
BLKG.	BLOCKING
BM.	BEAM
BOTT.	BOTTOM
C.B.	CATCH BASIN
C.B.C.	CALIFORNIA BUILDING CODE
C.G.	CORNER GUARD
C.I.	CAST IRON
C.I.P.	CAST IN PLACE
C.J.	CONTROL JOINT
C.L.	CENTERLINE
C.O.	CASED OPENING
C.W.	CURTAIN WALL
CAB.	CABINET
CEM.	CEMENT
CER.	CERAMIC
CLG.	CEILING
CLKG.	CAULKING
CLO.	CLOSET
CLR.	CLEAR
CNTR.	COUNTER
COL.	COLUMN
COMP.	COMPOSITE
CONC.	CONCRETE
CONN.	CONNECTION
CONSTR.	CONSTRUCTION
CONT.	CONTINUOUS
CORR.	CORRIDOR
CTR.	CENTER
CTSK.	COUNTERSUNK
D.F.	DRINKING FOUNTAIN
D.G.	DECOMPOSED GRANITE
D.O.	DOOR OPENING
D.S.	DOWNSPOUT
D.S.P.	DRY STANDPIPE
DBL.	DOUBLE
DEMO.	DEMOLISH
DEPT.	DEPARTMENT
DET.	DETAIL
DIA.	DIAMETER
DIM.	DIMENSION
DISP.	DISPENSER
DN.	DOWN
DR.	DOOR
DTL.	DETAIL
DWG.	DRAWING
DWR.	DRAWER
E.	EAST
E.J.	EXPANSION JOINT
E.O.S.	EDGE OF SLAB
E.P.	ELEC. PANEL
E.W.C.	ELEC. WATER COOLER
EA.	EACH
EL.	ELEVATION
ELEC.	ELECTRICAL
ELEV.	ELEVATOR
EMER.	EMERGENCY
ENCL.	ENCLOSURE
EQ.	EQUAL
EQPT.	EQUIPMENT
EXP.	EXPANSION
EXPO.	EXPOSED
EXST.	EXISTING
EXT.	EXTERIOR
F.A.	FIRE ALARM
F.B.	FLAT BAR
F.D.	FLOOR DRAIN
F.E.	FIRE EXTINGUISHER
F.E.C.	FIRE EXTINGUISHER CABINET
F.F.	FINISH FLOOR
F.H.C.	FIRE HOSE CABINET
F.O.C.	FACE OF CONCRETE
F.O.F.	FACE OF FINISH
F.O.M.	FACE OF MASONRY
F.O.S.	FACE OF STUD
F.S.	FIRE SPRINKLER
FDN.	FOUNDATION
FIN.	FINISH
FL.	FLOOR
FLASH.	FLASHING
FLUOR.	FLUORESCENT
FPRF.	FIREPROOF
FRMG.	FRAMING
FT.	FOOT *OR* FEET
FTG.	FOOTING
FURR.	FURRING
FUT.	FUTURE
G.B.	GRAB BAR
G.S.M.	GALVANIZED SHEET METAL
GA.	GAUGE
GALV.	GALVANIZED
GL.	GLASS
GND.	GROUND
GR.	GRADE
GYP.	GYPSUM
H.B.	HOSE BIB
H.C.	HOLLOW CORE
H.M.	HOLLOW METAL
HDWD.	HARDWOOD
HDWR.	HARDWARE
HORIZ.	HORIZONTAL
HR.	HOUR
HT.	HEIGHT
I.D.	INSIDE DIAMETER
I.S.A.	INTERNATIONAL SYMBOL OF ACCESSIBILITY
INSUL.	INSULATION
INT.	INTERIOR
JAN.	JANITOR
JT.	JOINT
L.F.	LINEAL FOOT
LAM.	LAMINATE
LAV.	LAVATORY
LKR.	LOCKER
LT.	LIGHT
M.H.	MANHOLE
M.O.	MASONRY OPENING
MAX.	MAXIMUM
MECH.	MECHANICAL
MED.	MEDIUM
MEMB.	MEMBRANE
MFR.	MANUFACTURER
MIN.	MINIMUM
MIR.	MIRROR
MISC.	MISCELLANEOUS
MTD.	MOUNTED
MTL.	METAL
MUL.	MULLION
N.	NORTH
N.I.C.	NOT IN CONTRACT
N.R.	NON RATED
N.T.S.	NOT TO SCALE
NO.	NUMBER
NOM.	NOMINAL
O.A.	OVERALL
O.C.	ON CENTER
O.D.	OUTSIDE DIAMETER
O.F.C.I.	OWNER FURNISHED CONTRACTOR INSTALLED
O.F.D.	OVERFLOW DRAIN
O.F.O.I.	OWNER FURNISHED OWNER INSTALLED
O.H.	OPPOSITE HAND
O.S.B.	ORIENTED STRAND BOARD
O/	OVER
OBS.	OBSCURE
OCC.	OCCUPANTS *OR* OCCUPANCY
OFC.	OFFICE
OPNG.	OPENING
OPP.	OPPOSITE
P.L.	PROPERTY LINE
P.LAM.	PLASTIC LAMINATE
P.T.D.	PAPER TOWEL DISPENSER
P.T.D./R.	PAPER TOWEL DISPENSER/RECEPTACLE
P.T.D.F.	PRESSURE TREATED DOUG FIR
PL.	PLATE
PLAS.	PLASTER
PLYWD.	PLYWOOD
PNTD.	PAINTED
PR.	PAIR
PRCST.	PRECAST
R.C.	RESILIENT CHANNEL
R.D.	ROOF DRAIN
R.O.	ROUGH OPENING
R.R.	RESTROOM
R.W.L.	RAIN WATER LEADER
RAD.	RADIUS
REC.	RECESSED
REF.	REFERENCE
REFR.	REFRIGERATOR
REINF.	REINFORCED
REQ.	REQUIRED
RESIL.	RESILIENT
RGTR.	REGISTER
RISER	RISER
RM.	ROOM
RWD.	REDWOOD
S.	SOUTH
S.A.M.	SELF-ADHERED MEMBRANE
S.C.	SOLID CORE
S.C.D.	SEAT COVER DISPENSER
S.D.	SOAP DISPENSER
S.F.	SQUARE FOOT
S.M.S.	SHEET METAL SCREW
S.N.D.	SANITARY NAPKIN DISPENSER
S.N.R.	SANITARY NAPKIN RECEPTACLE
S.O.G.	SLAB ON GRADE
S.S.	STAINLESS STEEL
SCHED.	SCHEDULE
SECT.	SECTION
SEP.	SEPARATE *OR* SEPARATION
SHT.	SHEET
SHTG.	SHEATHING
SHWR.	SHOWER
SIM.	SIMILAR
SPEC.	SPECIFICATION
SQ.	SQUARE
ST.	STATION
STD.	STANDARD
STL.	STEEL
STOR.	STORAGE
STRL.	STRUCTURAL
SUSP.	SUSPENDED
SYM.	SYMMETRICAL
T&G	TONGUE AND GROOVE
T.	TEMPERED GLASS
T.B.	TOWEL BAR
T.O.C.	TOP OF CONCRETE
T.O.P.	TOP OF PARAPET
T.O.STL.	TOP OF STEEL
T.O.W.	TOP OF WALL
T.P.	TOP OF PAVEMENT
T.P.D.	TOILET PAPER DISPENSER
TEL.	TELEPHONE
TER.	TERRAZZO
THK.	THICK
TRANS.	TRANSITION
TRD.	TREAD
TYP.	TYPICAL
U.O.N.	UNLESS OTHERWISE NOTED
UNF.	UNFINISHED
UR.	URINAL
UTIL.	UTILITY
V.I.F.	VERIFY IN FIELD
VER.	VERIFY
VERT.	VERTICAL
VEST.	VESTIBULE
W.	WEST
W.C.	WATER CLOSET
W.O.	WHERE OCCURS
W.P.	WATERPROOF
W.V.	WOOD VENEER
W/	WITH
W/O	WITHOUT
WD.	WOOD
WSCT.	WAINSCOT
WT.	WEIGHT

DRAFTING & MATERIAL SYMBOLS

GENERAL NOTES

1. CONTRACTOR SHALL VERIFY ALL CONDITIONS AND DIMENSIONS ON SITE PRIOR TO STARTING CONSTRUCTION. SHOULD A DISCREPANCY APPEAR IN THE SPECIFICATIONS OR DRAWINGS, OR IN THE WORK DONE BY OTHERS FROM THE CONTRACT DOCUMENTS THAT AFFECT ANY WORK, NOTIFY THE ARCHITECT AT ONCE FOR INSTRUCTION ON HOW TO PROCEED. IF THE CONTRACTOR PROCEEDS WITH THE WORK AFFECTED WITHOUT INSTRUCTIONS FROM THE ARCHITECT, THE CONTRACTOR SHALL MAKE GOOD ANY RESULTING DAMAGE OR DEFECT TO THE SATISFACTION OF THE ARCHITECT. SHOULD A CONFLICT OCCUR IN OR BETWEEN DRAWINGS AND SPECIFICATIONS, OR WHERE DETAIL REFERENCES ON CONTRACT DRAWINGS HAVE BEEN OMITTED, THE CONTRACTOR IS DEEMED TO HAVE ESTIMATED THE MOST EXPENSIVE MATERIALS AND CONSTRUCTION METHOD INVOLVED, UNLESS A WRITTEN DECISION FROM THE ARCHITECT HAS BEEN OBTAINED WHICH DESCRIBES AN ALTERNATE METHOD AND/OR MATERIALS.
2. THE CONTRACTOR SHALL CONFINE HIS OPERATIONS ON THE SITE TO AREAS PERMITTED BY THE OWNER. THE WORK SHALL BE DONE IN ACCORDANCE WITH APPLICABLE LAWS, LOCAL ORDINANCES, PERMITS AND THE CONTRACT DOCUMENTS. THE JOB SITE SHALL BE MAINTAINED IN A CLEAN, ORDERLY CONDITION FREE OF DEBRIS AND LITTER, AND SHALL NOT BE UNREASONABLY ENCUMBERED WITH ANY MATERIALS OR EQUIPMENT. EACH SUB-CONTRACTOR IMMEDIATELY UPON COMPLETION OF EACH PHASE OF HIS/HER WORK SHALL REMOVE ALL TRASH AND DEBRIS AS A RESULT OF HIS OPERATION.
3. CONTRACTOR SHALL NOTIFY THE ARCHITECT WHERE A CONFLICT OCCURS ON ANY OF THE CONTRACT DOCUMENTS OR DRAWINGS. CONTRACTOR IS NOT TO ORDER MATERIAL OR CONSTRUCT ANY PORTION OF THE BUILDING THAT IS IN CONFLICT UNTIL CONFLICT IS RESOLVED WITH THE AFFECTED PARTIES.
4. DIMENSIONSING RULES:
   - A. NOTED DIMENSIONS SHALL AT ALL TIMES TAKE PRECEDENCE OVER SCALED DIMENSIONS
   - B. ALL DIMENSIONS OF NEW WORK ARE TO THE FACE OF STUD U.O.N.
   - C. ALL DIMENSIONS OF EXISTING WORK ARE TO FACE OF FINISH U.O.N.
   - D. CEILING HEIGHT DIMENSIONS ARE FROM TOP OF FLOOR SLAB TO FINISH FACE OF CEILING.
   - E. DIMENSIONS NOTED "CLEAR" OR "CLR" MUST BE PRECISELY MAINTAINED.
   - F. DIMENSIONS ARE NOT ADJUSTABLE WITHOUT APPROVAL OF THE ARCHITECT.
   - G. +/-. VERTICAL DIMENSIONS ARE FROM THE TOP OF THE FLOOR SLAB DATUM LINE, ESTABLISHED BY THE CONTRACTOR SUBJECT TO THE APPROVAL OF THE OWNER OR ARCHITECT, UNLESS OTHERWISE NOTED.
   - H. DIMENSIONS MARKED "A.F.F." ARE ABOVE FINISHED FLOOR MATERIALS. IN CARPETED AREAS, THE TOP OF SLAB IS CONSIDERED TO BE THE FINISHED FLOOR.
   - I. DIMENSIONS MARKED V.I.F. SHALL BE "VERIFIED" IN THE FIELD BY THE CONTRACTOR.
   - J. ALL DIMENSIONS ARE TO STRUCTURAL COMPONENTS UNLESS OTHERWISE NOTED.
   - K. DIMENSIONS LOCATING DOORS ARE TO THE INSIDE EDGE OF JAMB, U.N.O.
5. SHOULD ANY CONDITIONS DEVELOP NOT COVERED BY THE CONTRACT DOCUMENTS, OR IF A CHANGE IN THE SCOPE OF WORK IS PROPOSED, A CHANGE ORDER DETAILING AND SPECIFYING THE REQUIRED CHANGE(S) SHALL BE SUBMITTED TO AND APPROVED BY DSA-ACCESS BEFORE PROCEEDING WITH THE WORK.

APPLICABLE CODES

2019 CALIFORNIA CODE OF REGULATIONS, TITLE 24

PART 1	CALIFORNIA ADMINISTRATIVE CODE
PART 2	CALIFORNIA BUILDING CODE
PART 3	CALIFORNIA ELECTRICAL CODE
PART 4	CALIFORNIA MECHANICAL CODE
PART 5	CALIFORNIA PLUMBING CODE
PART 6	CALIFORNIA ENERGY CODE
PART 9	CALIFORNIA FIRE CODE
PART 11	CALIFORNIA GREEN BUILDING STANDARDS CODE
PART 12	CALIFORNIA REFERENCED STANDARDS CODE

CALIFORNIA CODE OF REGULATIONS, TITLE 19
PUBLIC SAFETY STATE FIRE MARSHAL REGULATIONS

2017 NFPA 17	STANDARD FOR DRY CHEMICAL EXTINGUISHING SYSTEMS
2017 NFPA 17A	STANDARD FOR WET CHEMICAL EXTINGUISHING SYSTEM
2016 NFPA 72	NATIONAL FIRE ALARM AND SIGNALING CODE (CA AMENDED)
2003 UL 464	AUDIBLE SIGNALING DEVICES FOR FIRE ALARM AND SIGNALING SYSTEMS, INCLUDING ACCESSORIES
1999 UL 521	STANDARD FOR HEAT DETECTORS FOR FIRE PROTECTIVE SIGNALING SYSTEMS
2002 (R2010) UL 1971	STANDARD FOR SIGNALING DEVICES FOR THE HEARING IMPAIRED

PROJECT INFORMATION

PROJECT NAME: LAS POSITAS TEMPORARY FACULTY VILLAGE MODULAR OFFICES

PROJECT LOCATION: LAS POSITAS COMMUNITY COLLEGE, LIVERMORE, CA

PROJECT DESCRIPTION

THE PROJECT WORK WILL BE PERFORMED BY TWO CONTRACTORS. THERE WILL BE A SITE CONTRACTOR AND A MODULAR CONTRACTOR. THE PROJECT IS NOT BEING SUBMITTED IN INCREMENTS.

SITE WORK:
AN EXISTING PARKING LOT IS BEING CONVERTED INTO A VILLAGE TO HOUSE TEMPORARY FACULTY FACILITIES. SITE WORK INCLUDES DEMOLITION TO SUPPORT NEW CONSTRUCTION OF UTILTIES. A RAISED COVERED WALKWAY WILL CONNECT ENTRY DOORS FOR ALL MODULAR BUILDINGS. FIRE SPRINKLERS ARE NOT REQUIRED. NEW ASPHALT IS PROVIDED IN SPECIFIC AREAS TO ACCOMPLISH AN ACCESSIBLE PATHWAY, AND TO PROVIDE LEVEL SETTING FOR MODULAR BUILDINGS. LANDSCAPE IS LIMITED TO TREES LOCATED ABOVE-GRADE IN BOXES AND EXTENSION OF IRRIGATION. EXISTING UTILITIES TO REMAIN SHALL BE PROTECTED IN-PLACE INCLUDING ELECTRICAL POLE LIGHTS AND PARKING TICKET DISPENSERS. LIMITED WORK INSIDE MODULARS INCLUDES PULLING WIRING AND INSTALLATION OF FACE PLATE/DEVICES FOR LOW VOLTAGE DATA AND FIRE ALARM. SEE VOLUME 2 SHEETS ALT-01 - ALT-08 AND ALT-D1. PLUMBING AND ELECTRICAL CONNECTIONS TO THE MODULAR BUILDING WILL BE PROVIDED BY THE SITE CONTRACTOR. THESE DRAWINGS ARE FOUND IN VOLUME 1.

MODULAR CONSTRUCTION WORK:
8 MODULAR BUILDINGS WILL BE LEASED BY LAS POSITAS COLLEGE FOR NO MORE THAN THREE YEARS. THESE MODULARS WILL PROVIDE TEMPORARY FACULTY FACILITIES DURING THE DEMOLITION AND CONSTRUCTION OF NEW FACILITIES. MODULAR SCOPE OF WORK INCLUDES FACULTY OFFICES, MEETING ROOMS, BREAK ROOM AND RESTROOMS. MODULAR MANUFACTURER TO PROVIDE WALKWAYS FROM EXITS AT THE BACK OF THE MODULAR BUILDINGS. THESE DRAWINGS ARE FOUND IN VOLUME 2.

PROJECT LOCATION

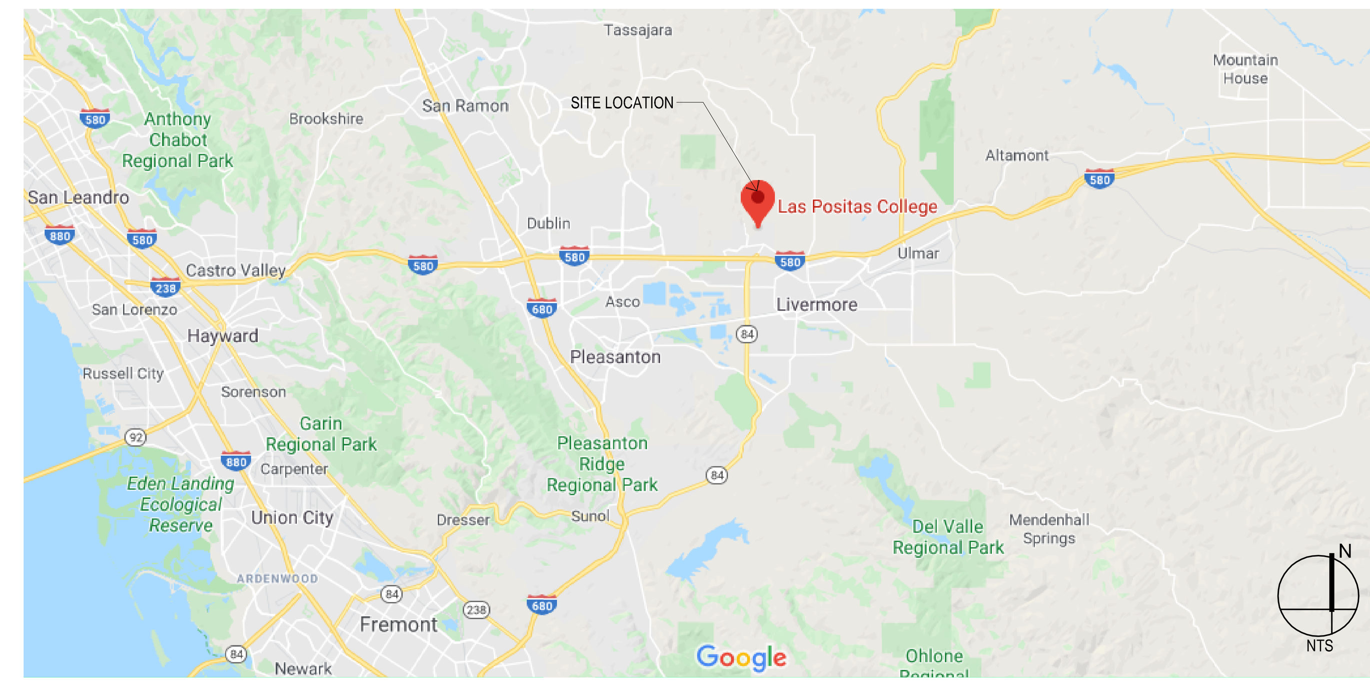

PROJECT TEAM

OWNER/DEVELOPER
CHABOT-LAS POSITAS COMMUNITY COLLEGE DISTRICT
7600 DUBLIN BLVD., 3RD FLOOR
DUBLIN, CA 94568

CIVIL ENGINEER
BKF ENGINEERS
4670 WILLOW ROAD, STE. 250
PLEASANTON, CA 94588

CONTACT: STEVEN REYNOLDS
925.396.7723
SREYNOLDS@BKF.COM

ARCHITECT
LPAS ARCHITECTURE + DESIGN
2484 NATOMAS PARK DR., SUITE 100
SACRAMENTO, CA 95833

CONTACT: TRACY HART
916.443.0335
THART@LPAS.COM

STRUCTURAL ENGINEER
THORNTON TOMASETTI, INC.
650 CALIFORNIA STREET, STE. 1400
SAN FRANCISCO, CA 94108

CONTACT: JUSTIN FAHEY
415.365.6968
JFAHEY@THORNTONTOMASETTI.COM

LANDSCAPE ARCHITECT
LPAS ARCHITECTURE + DESIGN
2484 NATOMAS PARK DR., SUITE 100
SACRAMENTO, CA 95833

CONTACT: THAIS DEL CASTILLO
916.443.0335
TDELCASTILLO@LPAS.COM

ELECTRICAL/PLUMBING
INTERFACE ENGINEERING, INC.
135 MAN STREET, STE. 400
SAN FRANCISCO, CA 94105

ELECTRICAL
CONTACT: THOMAS JUN
415.489.7252
THOMASJ@INTERFACEENG.COM

PLUMBING
GEORGE EDPALINA
415.489.3206
GEORGEE@INTERFACEENG.COM

STATEMENT OF GENERAL CONFORMANCE

FOR THE ARCHITECTS/ENGINEERS WHO UTILIZE PLANS, INCLUDING, BUT NOT LIMITED TO SHOP DRAWINGS, PREPARED BY OTHER LICENSED DESIGN PROFESSIONALS AND/OR CONSULTANTS (APPLICATION NO.01-119031F**ILE NO.** 1-/C2)

THE DRAWINGS OR SHEETS LISTED ON THE COVER OR INDEX SHEET
THIS DRAWING, PAGE OF SPECIFICATIONS/CALCULATIONS

HAVE BEEN PREPARED BY OTHER DESIGN PROFESSIONALS OR CONSULTANTS WHO ARE LICENSED AND/OR AUTHORIZED TO PREPARE SUCH DRAWINGS IN THIS STATE. IT HAS BEEN EXAMINED BY ME FOR:

1) DESIGN INTENT AND APPEARS TO MEET THE APPROPRIATE REQUIREMENTS OF TITLE 24, CALIFORNIA CODE OF REGULATIONS AND THE PROJECT SPECIFICATIONS PREPARED BY ME, AND
2) COORDINATION WITH MY PLANS AND SPECIFICATIONS AND IS ACCEPTABLE FOR INCORPORATING[INTO THE CONSTRUCTION OF THIS PROJECT.

THE STATEMENT OF GENERAL CONFORMANCE"SHALL NOT BE CONSTRUCTED AS RELIEVING ME OF MY RIGHTS, DUTIES, AND RESPONSIBILITIES UNDER SECTIONS 17302 AND 81138 OF THE EDUCATION CODE AND SECTIONS 4-336, 40241 AND 4-344" OF TITLE 24, PART 1 (TITLE 24, PART 1, SECTION 4-137(B))

ARCHITECT OF RECORD: ____________ DATE: 09/22/2020

IDENTIFICATION STAMP
DIV. OF THE STATE ARCHITECT
APP: 01-119031 INC:
REVIEWED FOR
SS ☑ FLS ☑ ACS ☑
DATE: 10/22/2020

LPAS
2484 Natomas Park Drive Suite 100 Sacramento CA 95833
916 443 0335 lpasdesign.com
Architecture + Design

LAS POSITAS TEMPORARY FACULTY VILLAGE MODULAR OFFICES

LAS POSITAS COMMUNITY COLLEGE
LIVERMORE, CA

ARCHITECT'S STAMP

APPROVAL

THIS DOCUMENT CONTAINS INFORMATION THAT IS PROPRIETARY TO LPAS, INC. AND IS FURNISHED FOR THE PURPOSES OF REVIEW, BIDDING OR CONSTRUCTION OF THE PROJECT LISTED IN THE JOB TITLE BOX ABOVE AND SHALL NOT BE USED FOR ANY OTHER PURPOSE OR RELEASED TO ANY OTHER PARTY WITHOUT THE WRITTEN CONSENT OF LPAS, INC. INFORMATION CONTAINED HEREIN IS AN INSTRUMENT OF PROFESSIONAL SERVICES AND SHALL REMAIN THE PROPERTY OF LPAS, INC. ALL RIGHTS RESERVED COPYRIGHT © 2009.

THIS DRAWING IS NOT FINAL OR TO BE USED FOR CONSTRUCTION UNTIL IT IS SIGNED BY THE ARCHITECT AND ENGINEER.

CONSULTANT

GENERAL INFORMATION

PROJECT NO:
DATE: 2020-08-28

SHEET NO:
A0.01s

DRAWING INDEX

VOLUME 1

A0.00s VOLUME 1 COVER SHEET

GENERAL

A0.01s GENERAL INFORMATION
A0.02s SHEET INDEX
A0.10s OVERALL CAMPUS PLAN
A0.20s CODE AND SITE ANALYSIS
A0.30s SITE ACCESSIBILITY PLAN
A0.40s FIRE ACCESS PLAN

CIVIL
C1.01 EXISTING CONDITIONS
C1.02 EXISTING CONDITIONS
C2.00 SITE DEMOLITION PLAN
C3.00 SITE UTILITY PLAN
C4.00 SITE PAVING AND GRADING PLAN
C5.00 HORIZONTAL CONTROL PLAN
C6.00 EROSION CONTROL PLAN
C7.00 CIVIL DETAILS

ARCHITECTURAL
A1.00s OVERALL SITE PLAN
A1.11s SIGNAGE PLAN AND DETAILS
A2.01s OVERALL PLANS
A3.01s ENLARGED SECTIONS & DETAILS

STRUCTURAL
S1.00s COVER SHEET & DRAWING LIST & ABBREVIATIONS
S1.01s CONCRETE STEEL & DETAILS
S2.01s PLANS AND SECTIONS
S3.00s TYPICAL WOOD DETAILS AND SCHEDULES
S3.01s TYPICAL WOOD DETAILS

PLUMBING
P0.10 SYMBOL LIST, GENERAL NOTES - PLUMBING
P1.10 SITE PLAN - PLUMBING

ELECTRICAL
E0.10s SYMBOL LIST, GENERAL NOTES AND LUMINAIRE SCHEDULE - ELECTRICAL
E0.20s TITLE 24 FORMS - ELECTRICAL
E0.30s TITLE 24 FORMS - ELECTRICAL
E1.10s SITE PLAN - POWER
E2.10s FLOOR PLAN - LIGHTING
E3.10s FLOOR PLAN - POWER
E4.10s PANEL SCHEDULE, PARTIAL SINGLE LINE-ELECTRICAL
E5.10s DETAILS - ELECTRICAL

FIRE ALARM
FA0.01 SYMBOL LIST, GENERAL NOTES - FIRE ALARM
FA2.10 FIRST FLOOR PLAN - FIRE ALARM
FA3.10 CALCULATIONS - FIRE ALARM

TECHNOLOGY
T0.10 SYMBOLS LIST & GENERAL NOTES - TECHNOLOGY
T1.10 SITE PLAN - TECHNOLOGY
T2.10 FLOOR PLAN - TECHNOLOGY
T3.10 DETAILS AND RISER DIAGRAMS - TECHNOLOGY
T3.20 DETAILS - TECHNOLOGY

LANDSCAPE AND IRRIGATION
L1.00 LANDSCAPE PLAN
L2.00 IRRIGATION PLAN
L2.20 HYDROZONE PLAN

VOLUME 2

A0.00 VOLUME 2 COVER

LAS POSITAS - CHABOT P-20-2321 B/S/G

COVER

A0.0 COVER SHEET
A0.0.1 PROJECT OPTIONS SCHEDULE
A0.1 TYPICAL KEY PLAN AND SCHEDULES, GEN NOTES
A0.2 SIGNAGE AND SYMBOLS
A0.4 DSA-103 T&I PLYWOOD FLOORS
A0.5 CALGREEN SPEC'S

ARCHITECTURAL

A1.1 12X40 OPTION 2 A/B FLOOR PLAN
A2.1 ARCHITECTURAL DETAILS (WOOD FRAMING SHTG FINISH)
A2.9 ARCHITECTURAL DETAILS (FLOOR)
A3.1 ACCESSIBILITY AND MOUNTING HEIGHT DETAILS
A3.2.1 RCP OPTION 2 (A) (B)
A3.2.4 CEILING NOTES
A3.3 CEILING DETAILS (T-GRID)
A4.0 ROOF PLAN MONO AND DUAL SLOPE
A4.1 ROOF DETAILS (STANDING SEAM)
A5.0 EXTERIOR ELEVATIONS
A5.1 INTERIOR ELEVATIONS
A6.0 ARCHITECTURAL SECTIONS
A7.1 ADDITIONAL OPTION DETAILS
A7.2 ADDITIONAL OPTION DETAILS

MEP

E0.1 ELECTRICAL GENERAL NOTES
E1.2 12X40 ELECTRICAL PLAN OPTION 2 (A) (B)
E1.4 12X40 ELECTRICAL PLAN WORK ROOM AND ELECTRICAL PANEL SCHEDULE
E2.0 T24 - NRCC-LTI-01 & 02 INDOOR LIGHTING
E2.1 T24 - NRCC-LTO-01/02 OUTDOOR LIGHTING
E2.2 T24 - NRCC-ELC-01 ELECTRICAL POWER DISTRIBUTION

M0.1 MISCELLANEOUS NOTES & DETAILS
M2.0 T24 - NRCC-PRF-01-E PERFORMANCE CERTIFICATE
M2.1 T24 - NRCC-PRF-01-E PERFORMANCE CERTIFICATE
M2.2 T24 - NRCC-PRF-01-E PERFORMANCE CERTIFICATE

P1.2 12X40 SUPPLY & ISO OPTION 2 (A) (B)
P2.2 12X40 WASTE & ISO OPTION 2 (A) (B)

FOUNDATION

F1.10 WOOD FOUNDATION PLAN

STRUCTURAL

S0.1 STRUCTURAL GEN NOTES
S1.0.1 WOOD SHEATHING FLOOR FRAMING PLAN
S1.2 STRUCTURAL DETAILS (FLOOR)
S3.0 ROOF FRAMING PLANS
S3.1 STRUCTURAL DETAILS (ROOF)
S3.3 ROOF PERIMETER TRUSS
S4.1 WD WALL FRAMING ELEVATIONS
S4.2 WALL DETAILS (WOOD FRAMING)
S4.4 TYP FRAMING
S4.5 FRAMING SCHEDULES
S5.0 LONG SECTION - (DUAL)

UNDER SEPARATE COVER

ALT-01 AWNING FRAMING AND CONNECTION DETAILS

LAS POSITAS - CHABOT P-20-2314 A/B/C/D - P-20-2320 A/B

COVER

A0.0 COVER SHEET
A0.0.1 PROJECT OPTIONS SCHEDULE
A0.1 TYPICAL KEY PLAN AND SCHEDULES, GEN NOTES
A0.2 SIGNAGE AND SYMBOLS
A0.4 DSA-103 T&I PLYWOOD FLOORS
A0.5 CALGREEN SPEC'S

ARCHITECTURAL

A1.0 24X40 FLOOR PLAN
A1.2 48X40 FLOOR PLAN
A2.1 ARCHITECTURAL DETAILS (WOOD FRAMING SHTG FINISH)
A2.9 ARCHITECTURAL DETAILS (FLOOR)
A3.1 SINGLE OCC BATHROOM
A3.2 RCP
A3.2.1 CEILING NOTES
A3.3 CEILING DETAILS (T-GRID)
A3.4 CEILING DETAILS (GYP BOARD)
A4.0.1 ROOF PLAN MONO SLOPE (STANDING SEAM)
A4.1 ROOF DETAILS (STANDING SEAM)
A5.0 SIDEWALL ELEVATIONS
A5.1 ENDWALL ELEVATIONS
A5.2 INTERIOR ELEVATIONS
A6.0 SECTION - STANDING SEAM (MONO)
A6.2 SECTION
A7.1 ADDITIONAL OPTION DETAILS
A7.2 ADDITIONAL OPTION DETAILS

MEP

E1.0 ELECTRICAL PLAN 24X40
E1.1 ELECTRICAL SCHEDULE 24X40
E1.4 ELECTRICAL PLAN 48X40
E1.5 ELECTRICAL SCHEDULE 48X40
E2.1 120'X40' T24 CZ 16 (WALL AC)
E2.2 120'X40' T24 CZ 16 (WALL AC)
E2.3 120'X40' T24 CZ 16 (WALL AC)

M0.1 MISCELLANEOUS NOTES & DETAILS
M2.1 120'X40' T24 CZ 16 (WALL AC)
M2.2 120'X40' T24 CZ 16 (WALL AC)
M2.3 120'X40' T24 CZ 16 (WALL AC)
M2.4 120'X40' T24 CZ 16 (WALL AC)
M5.1 MECHANICAL CEILING PLAN 24X40
M7.1 MECHANICAL CEILING PLAN 48X40

P1.0 TYPICAL PLUMBING DETAILS

STRUCTURAL

S0.1 STRUCTURAL GEN NOTES
S1.0.1 WD SHTH'G FLR FRM'G PLAN (50+15 PSF)
S1.2 STRUCTURAL DETAILS (FLOOR)
S3.0.1 MONO SLOPE ROOF FRM'G PLAN
S3.1 STRUCTURAL DETAILS (ROOF)
S3.3 ROOF PERIMETER TRUSS
S4.1 WD WALL FRAMING ELEVATIONS
S4.2 WALL DETAILS (WOOD FRAMING)
S4.4 TYP FRAMING
S4.5 FRAMING SCHEDULES
S5.0 LONG, SECTION - (MONO)
SR0 MODULE PLAN AND NOTES
SR1 RAMP AND LANDING PLAN
SR2 RAMP AND LANDING FRAMING
SR3 FOUNDATION PLAN
SR4 RAMP AND LANDING / STAIR FRAMING ELEVATION
SR5 RAMP DETAILS
SR6 RAMP DETAILS
SR7 STAIR CONN

UNDER SEPARATE COVER

ALT-01 48'X40' OFFICE BUILDING A1 & A2
ALT-02 48'X40' OFFICE BUILDING A1 & A2
ALT-03 48'X40' OFFICE BUILDING A1 & A2
ALT-04 48'X40' OFFICE BUILDING B1, B2, B3, B4
ALT-05 48'X40' OFFICE BUILDING B1, B2, B3, B4
ALT-06 48'X40' OFFICE BUILDING B1, B2, B3, B4
ALT-07 24'X40' MULTI-PURPOSE BUILDING - C
ALT-08 24'X40' MULTI-PURPOSE BUILDING - C
ALT-D1 ALTERATION

SHEET COUNT: 158

IDENTIFICATION STAMP
DIV. OF THE STATE ARCHITECT
APP: 01-119031 INC:
REVIEWED FOR
SS ☑ FLS ☑ ACS ☑
DATE: 10/22/2020

LPAS

2484 Natomas Park Drive Suite 100 Sacramento CA 95833
916 443 0335 lpasdesign.com **Architecture + Design**

LAS POSITAS
TEMPORARY FACULTY
VILLAGE MODULAR
OFFICES

LAS POSITAS COMMUNITY COLLEGE
LIVERMORE, CA

LICENSED ARCHITECT
ROBERT DWYANE
REGISTRATION
STATE OF CALIFORNIA

ARCHITECT'S STAMP APPROVAL

THIS DOCUMENT CONTAINS INFORMATION THAT IS PROPRIETARY TO LPAS, INC. AND IS FURNISHED FOR THE PURPOSES OF REVIEW, BIDDING OR CONSTRUCTION OF THE PROJECT LISTED IN THE JOB TITLE BOX ABOVE AND SHALL NOT BE USED FOR ANY OTHER PURPOSE OR RELEASED TO ANY OTHER PARTY WITHOUT THE WRITTEN CONSENT OF LPAS, INC. INFORMATION CONTAINED HEREIN IS AN INSTRUMENT OF PROFESSIONAL SERVICES AND SHALL REMAIN THE PROPERTY OF LPAS, INC. ALL RIGHTS RESERVED COPYRIGHT © 2009.

THIS DRAWING IS NOT FINAL OR TO BE USED FOR CONSTRUCTION UNTIL IT IS SIGNED BY THE ARCHITECT AND ENGINEER.

CONSULTANT

SHEET INDEX

PROJECT NO:
DATE: 2020-08-28

SHEET NO:
A0.02s

FOR CONSTRUCTION

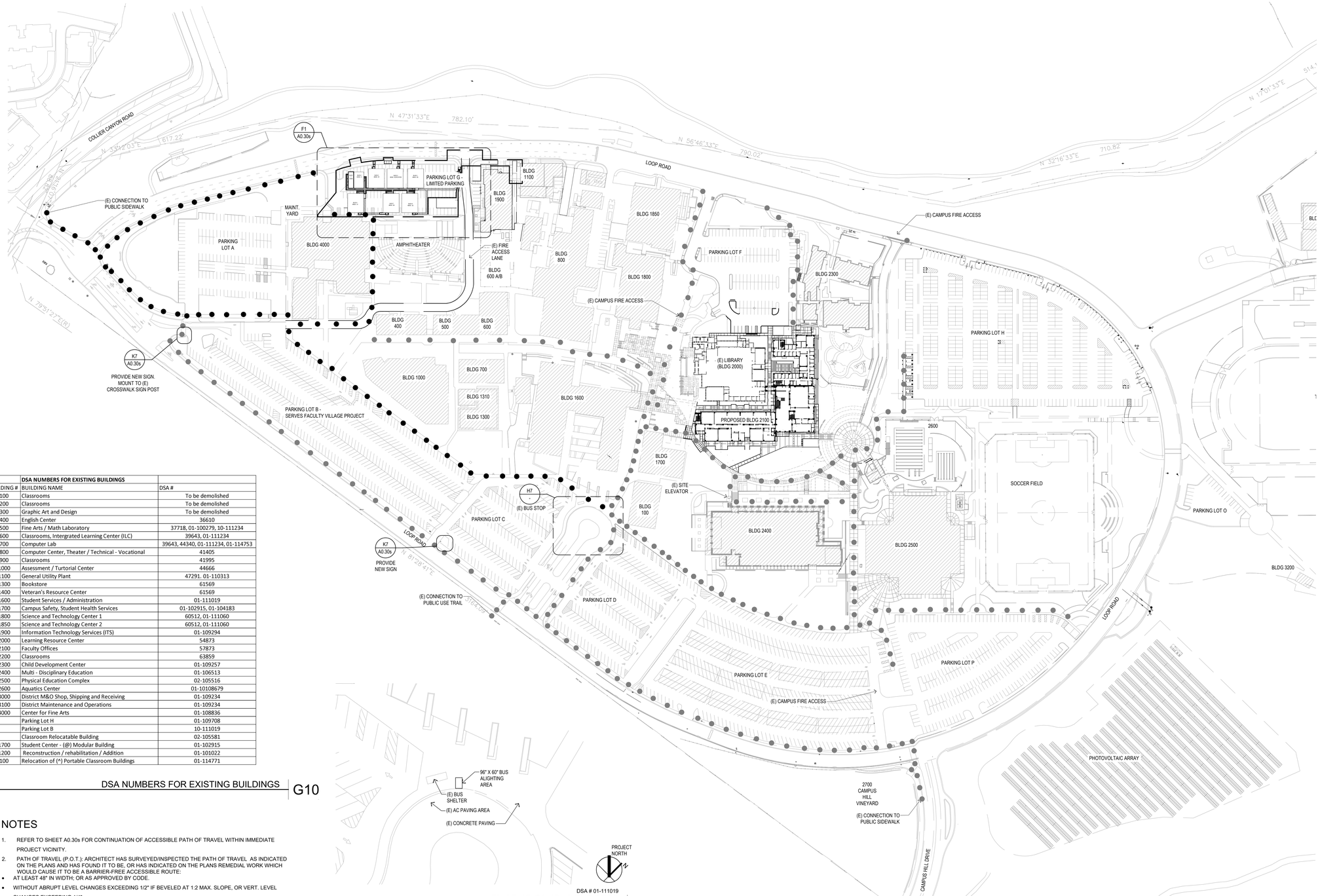

DSA # 01-111019

EXISTING CAMPUS BUS STOP H7
1" = 30'-0"

	DSA NUMBERS FOR EXISTING BUILDINGS	
BUILDING #	BUILDING NAME	DSA #
100	Classrooms	To be demolished
200	Classrooms	To be demolished
300	Graphic Art and Design	To be demolished
400	English Center	36610
500	Fine Arts / Math Laboratory	37718, 01-100279, 10-111234
600	Classrooms, Intergrated Learning Center (ILC)	39643, 01-111234
700	Computer Lab	39643, 44340, 01-111234, 01-114753
800	Computer Center, Theater / Technical - Vocational	41405
900	Classrooms	41995
1000	Assessment / Turtorial Center	44666
1100	General Utility Plant	47291. 01-110313
1300	Bookstore	61569
1400	Veteran's Resource Center	61569
1600	Student Services / Administration	01-111019
1700	Campus Safety, Student Health Services	01-102915, 01-104183
1800	Science and Technology Center 1	60512, 01-111060
1850	Science and Technology Center 2	60512, 01-111060
1900	Information Technology Services (ITS)	01-109294
2000	Learning Resource Center	54873
2100	Faculty Offices	57873
2200	Classrooms	63859
2300	Child Development Center	01-109257
2400	Multi - Disciplinary Education	01-106513
2500	Physical Education Complex	02-105516
2600	Aquatics Center	01-10108679
3000	District M&O Shop, Shipping and Receiving	01-109234
3100	District Maintenance and Operations	01-109234
4000	Center for Fine Arts	01-108836
	Parking Lot H	01-109708
	Parking Lot B	10-111019
	Classroom Relocatable Building	02-105581
1700	Student Center - (@) Modular Building	01-102915
1200	Reconstruction / rehabilitation / Addition	01-101022
100	Relocation of (^) Portable Classroom Buildings	01-114771

DSA NUMBERS FOR EXISTING BUILDINGS G10

NOTES

1. REFER TO SHEET A0.30s FOR CONTINUATION OF ACCESSIBLE PATH OF TRAVEL WITHIN IMMEDIATE PROJECT VICINITY.
2. PATH OF TRAVEL (P.O.T.): ARCHITECT HAS SURVEYED/INSPECTED THE PATH OF TRAVEL AS INDICATED ON THE PLANS AND HAS FOUND IT TO BE, OR HAS INDICATED ON THE PLANS REMEDIAL WORK WHICH WOULD CAUSE IT TO BE A BARRIER-FREE ACCESSIBLE ROUTE:

- AT LEAST 48" IN WIDTH; OR AS APPROVED BY CODE.
- WITHOUT ABRUPT LEVEL CHANGES EXCEEDING 1/2" IF BEVELED AT 1:2 MAX. SLOPE, OR VERT. LEVEL CHANGES EXCEEDING 1/4"
- WITH A FIRM, STABLE, AND SLIP RESISTANT WALKING SURFACE
- WITH A RUNNING SLOPE OF 1:20 OR LESS, UNLESS OTHERWISE INDICATED, AND A CROSS SLOPE OF 1:50 OR LESS
- IS FREE OF OVERHEAD OBSTRUCTIONS WITHIN 80" ABOVE THE WALKING SURFACE, AND
- IS FREE OF OBJECTS WHICH PROTRUDE MORE THAN 4" BETWEEN THE HEIGHTS OF 27" AND 80" ABOVE THE WALKING SURFACE

3. THE PATH OF TRAVEL (P.O.T.) IDENTIFIED IN THESE CONSTRUCTION DOCUMENTS IS COMPLIANT WITH THE CURRENT APPLICABLE CALIFORNIA BUILDING CODE ACCESSIBILITY PROVISIONS FOR PATH OF TRAVEL REQUIREMENTS FOR ALTERATIONS, ADDITIONS AND STRUCTURAL REPAIRS. AS PART OF THE DESIGN OF THIS PROJECT, THE POT WAS EXAMINED AND ANY ELEMENTS, COMPONENTS OR PORTIONS OF THE P.O.T. THAT WERE DETERMINED TO BE NON-COMPLIANT 1) HAVE BEEN IDENTIFIED AND 2) THE CORRECTIVE WORK NECESSARY TO BRING THEM INTO COMPLIANCE HAVE BEEN INCLUDED WITHIN THE SCOPE OF THIS PROJECT'S WORK THROUGH DETAILS, DRAWINGS AND SPECIFICATIONS INCORPORATED INTO THESE CONSTRUCTION DOCUMENTS. ANY NON-COMPLIANT ELEMENTS, COMPONENTS OR PORTIONS OF THE POT THAT WILL NOT BE CORRECTED BY THIS PROJECT BASED ON VALUATION THRESHOLD LIMITATIONS OR A FINDING OF UNREASONABLE HARDSHIP ARE SO INDICATED IN THESE CONSTRUCTION DOCUMENTS.
DURING CONSTRUCTION, IF POT ITEMS WITHIN THE SCOPE OF THE PROJECT REPRESENTED AS CODE COMPLIANT ARE FOUND TO BE NON-CONFORMING BEYOND REASONABLE CONSTRUCTION TOLERANCES, THEY SHALL BE BROUGHT INTO COMPLIANCE WITH THE CBC AS A PART OF THIS PROJECT BY MEANS OF A CONSTRUCTION CHANGE DOCUMENT.

PATH OF TRAVEL NOTES K10
NO SCALE

			TYPE OF PARKING				
	Student Parking	Accessible Parking and Van Parking	Visitor Parking	Staff Only Parking	Other	Comments	Total
PARKING LOT A	120	2 Accessible 3 Van	0	0			125
PARKING LOT B	362	13 Accessible 4 Van	9	35	1 Reserved President Parking 12 Electric, 8 Motorcycle		444
PARKING LOT C	127	7	0	20	1 Security Parking		155
PARKING LOT D	166	12	0	0			178
PARKING LOT E	421	7	0	20			448
PARKING LOT F	12	15 Accessible 1 Van	0	87	2 Electric, 5 15 Minute Parking, 21 Motorcycle, 2 Carpool		124
PARKING LOT G	0	1 Accessible 2 Van	0	8		Temporay Faculty Village - Parking Limited	11
TOTAL	1208	67	9	170	52		1485

CAMPUS PARKING MATRIX K7

PATH OF TRAVEL. (P.O.T.) SPECIFIC TO SCOPE OF WORK CROSS SLOPE SHALL NOT EXCEED 2%. SEE NOTES K10 ON THIS SHEET

PATH OF TRAVEL. (P.O.T.) OVERALL CAMPUS

LEGEND K5
NO SCALE

0 100 200 300
SCALE: 1" = 100'-0" FT

PROJECT NORTH

OVERALL SITE PLAN K1
1" = 100'-0"

IDENTIFICATION STAMP
DIV. OF THE STATE ARCHITECT
APP: 01-119031 INC:
REVIEWED FOR
SS ☑ FLS ☑ ACS ☑
DATE: 10/22/2020

LPAS

2484 Natomas Park Drive Suite 100 Sacramento CA 95833
916 443 0335 lpasdesign.com Architecture + Design

LAS POSITAS
TEMPORARY FACULTY
VILLAGE MODULAR
OFFICES

LAS POSITAS COMMUNITY COLLEGE
LIVERMORE, CA

LICENSED ARCHITECT
GEORGE A. DAYANIS
C-28-21
REGISTERED
DATE
STATE OF CALIFORNIA

ARCHITECT'S STAMP APPROVAL

THIS DOCUMENT CONTAINS INFORMATION THAT IS PROPRIETARY TO LPAS, INC. AND IS FURNISHED FOR THE PURPOSES OF REVIEW, BIDDING OR CONSTRUCTION OF THE PROJECT LISTED IN THE JOB TITLE BOX ABOVE AND SHALL NOT BE USED FOR ANY OTHER PURPOSE OR RELEASED TO ANY OTHER PARTY WITHOUT THE WRITTEN CONSENT OF LPAS, INC. INFORMATION CONTAINED HEREIN IS AN INSTRUMENT OF PROFESSIONAL SERVICES AND SHALL REMAIN THE PROPERTY OF LPAS, INC. ALL RIGHTS RESERVED COPYRIGHT © 2009.

THIS DRAWING IS NOT FINAL OR TO BE USED FOR CONSTRUCTION UNTIL IT IS SIGNED BY THE ARCHITECT AND ENGINEER.

CONSULTANT

OVERALL CAMPUS PLAN

PROJECT NO:
DATE: 2020-08-28

SHEET NO:
A0.10s

FOR CONSTRUCTION

SANDIS | CIVIL ENGINEERS SURVEYORS PLANNERS

FIRE HYDRANT FLOW TEST RESULTS

for
Parking Lot G
Los Positas College
Livermore, CA

Prepared By:
SANDIS
636 9th Street
Oakland, CA 94607
(510) 873-8866

April 27,2020

Project No: 618184

TEST 1: Record static and residual pressure on Hydrant B.
Run flow test and measure static and residual pressure at Hydrant A.

Hydrant	Location	Elevation (ft)	Gauge	Static Pressure (PSI)	Residual Pressure (PSI)	Flow (GPM)
A	Parking Lot G	471	7	115	84	1425
B	Building 1850	475	1	114	91	0

Flow available @ Hydrant B
Q20=(Q*((STATIC-20)/(STATIC-RESIDUAL))0.54)
Q20=(1425*((114-20)/(114-91))0.54)= 3048 gpm

TEST 2: Record static and residual pressure on Hydrant A.
Run flow test and measure static and residual pressure at Hydrant B.

Hydrant	Location	Elevation (ft)	Gauge	Static Pressure (PSI)	Residual Pressure (PSI)	Flow (GPM)
A	Parking Lot G	471	7	115	96	0
B	Building 1850	475	1	114	-*	1400

*No residual pressure recorded

Flow available @ Hydrant A
Q20=(Q*((STATIC-20)/(STATIC-RESIDUAL))0.54)
Q20=(1400*((115-20)/(115-96))0.54)= 3339 gpm

REGISTERED PROFESSIONAL ENGINEER MICHAEL A. KUYKENDALL No. 70870 Exp. 6/30/21 CIVIL STATE OF CALIFORNIA

Michael Kuykendall
Director – Engineering/ Associate Principal

APPLICABLE CODES

OCCUPANCY GROUP: BUSINESS GROUP B

CONSTRUCTION TYPE: TYPE V-B

BUILDING AREA:

BUILDINGS ON THE SAME LOT ARE CONSIDERED AS PORTIONS OF A SINGLE BUILDING IN ACCORDANCE WITH SECTION 503.1.2

ACTUAL PROJECT AREA = 12,915 SF

ALLOWABLE AREA: AREA(TABULAR, NON-SPRINKLERED) + (NON-SPRINKLERED AREA X AREA FACTOR INCREASE)
AREA TABULAR:9000 SF
AREA FACTOR INCREASE :0.67(SEE CALCULATIONS BELOW)
ALLOWABLE AREA: 9000 + (9000 X 0.67)
ALLOWABLE AREA: 15,030SF
AREA FACTOR INCREASE= [F/P-.25]W/30
F=340 LF
P=460 LF
W= (NORTH [L X w]+ EAST [L X w] + SOUTH[L X w] + WEST[L X w])/P
NORTH = 156 FT X 30 = 4680
EAST = 96 FT X 30 = 2880
SOUTH = 120 FT X 0 = 0
WEST = 88 FT X 30 = 2640
W=(4680 + 2880 + 0 + 2640)/P
W=10200/460
W=22
AREA FACTOR INCREASE=[340/460-.25]/(22/30)
AREA FACTOR INCREASE = 0.67

TYPE VB CONSTRUCTION PERMITTED FOR WALKWAY. WALKWAY SURFACE MATERIAL OF DECKS AND PORCHES SHALL BE NONCOMBUSTIBLE AND COMPLY WITH SECTION 709A.

MAXIMUM ALLOWABLE STORIES: 2

ACTUAL NUMBER OF STORIES: 1

ACTUAL BUILDING HEIGHT: 10'-0"

EXIT SEPARATION:

PER 1028.4.2 EXIT IS THROUGH AN EGRESS COURT GREATER THAN 10' IN WIDTH - RATED EGRESS COURT WALLS ARE NOT REQUIRED. EXIT SEPARATION SHALL BE GREATED THAN 1/2 DIAGONAL

RATING OF COMPONENTS (TABLE 601) :

PRIMARY STRUCTURAL FRAME:	0
EXTERIOR LOAD - BEARING WALLS:	0
EXTERIOR NON LOAD-BEARING WALLS:	0
INTERIOR LOAD-BEARING WALLS:	0
INTERIOR NON LOAD-BEARING WALLS/PARTITIONS:	0
FLOORS & SECONDARY MEMBERS:	0
ROOFS & SECONDARY MEMBERS:	0
SUPPORTING STRUCTURE FOR HORIZONTAL ASSEMBLIES:	
ROOF COVERING CLASSIFICATION:	A

PROJECT IS LOCATED WITHIN A WILDLIFE URBAN INTERFACE (WUI)
CHAPTER 7A REQUIREMENTS:

705A.4	ROOF GUTTERS SHALL PREVENT THE ACCUMULATION OF LEAVES AND DEBRIS IN THE GUTTER.
709A	WALKWAY SURFACE MATERIALS OF DECKS AND PORCHES SHALL BE NON-COMBUSTIBLE.

DOOR SWING IN ANY POSITION SHALL NOT REDUCE THE REQUIRED WIDTH BY MORE THAN ONE-HALF
REQUIRED WIDTH: 44"
ONE-HALF OF 44" = 22"
WALKWAY WIDTH = 60" - 37" DOOR SWING = 23"

DOORS, WHEN FULLY OPENED, SHALL NOT REDUCE THE REQUIRED WIDTH BY MORE THAN 7"
REQUIRED WIDTH 44" - 7" = 37" CLEAR
PROVIDED WIDTH = 40" CLEAR

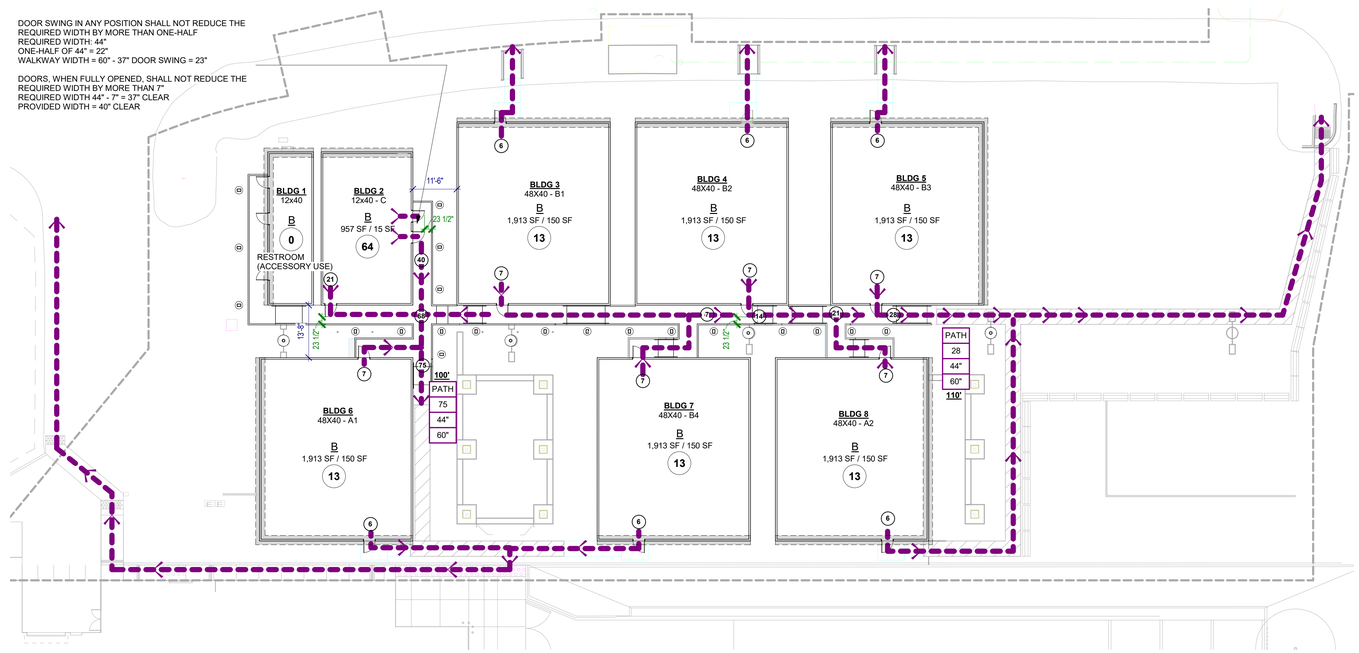

EXITING PLAN
1/16" = 1'-0"
H1

IDENTIFIES PERIMETER USED TO CALCULATE ALLOWABLE AREA

TOTAL PERIMETER: **460 FT**

NORTH PERIMETER: 156 FT
EAST PERIMETER: 96 FT
SOUTH PERIMETER: 120FT
WEST PERIMETER: 88 FT

BLDG. NUMBER AND ALTERNATE PLAN TO PC DRAWINGS:

BLDG 1	RESTROOM BLDG. SEE SHEET A1.1
BLDG 2	MULTIPURPOSE BLDG. SEE SHEET ALT-07
BLDG 3,4,5,7	OFFICE BLDG. SEE SHEET ALT-04
BLDG 6,8	OFFICE BLDG. SEE SHEET ALT-01

SYMBOL LEGEND

B	OCCUPANT TYPE
49	OCCUPANT LOAD OF ROOM OR AREA
#	PATH AND DIRECTION OF EGRESS, WITH CUMULATIVE LOAD ALONG PATH EGRESS TRAVEL
DOOR	EGRESS COMPONENT
#	CUMULATIVE OCCUPANT LOAD
#	REQUIRED WIDTH
#	PROVIDED WIDTH
150'	LONGEST PATH OF TRAVEL: DISTANCE FROM FURTHEST POINT OF EGRESS PATH TO EXIT

IDENTIFICATION STAMP
DIV. OF THE STATE ARCHITECT
APP: 01-119031 INC:
REVIEWED FOR
SS ☑ FLS ☑ ACS ☑
DATE: 10/22/2020

LPAS

2484 Natomas Park Drive Suite 100 Sacramento CA 95833
916 443 0335 lpasdesign.com Architecture + Design

LAS POSITAS TEMPORARY FACULTY VILLAGE MODULAR OFFICES

LAS POSITAS COMMUNITY COLEGE
LIVERMORE, CA

NO.	ISSUE	DATE

LICENSED ARCHITECT PURVI A. OWYANG C-18752 RENEWAL DATE STATE OF CALIFORNIA

ARCHITECT'S STAMP APPROVAL

THIS DOCUMENT CONTAINS INFORMATION THAT IS PROPRIETARY TO LPAS, INC. AND IS FURNISHED FOR THE PURPOSES OF REVIEW, BIDDING OR CONSTRUCTION OF THE PROJECT LISTED IN THE JOB TITLE BOX ABOVE AND SHALL NOT BE USED FOR ANY OTHER PURPOSE OR RELEASED TO ANY OTHER PARTY WITHOUT THE WRITTEN CONSENT OF LPAS, INC. INFOMATION CONTAINED HEREIN IS AN INSTRUMENT OF PROFESSIONAL SERVICES AND SHALL REMAIN THE PROPERTY OF LPAS, INC. ALL RIGHTS RESERVED COPYRIGHT © 2009.

THIS DRAWING IS NOT FINAL OR TO BE USED FOR CONSTRUCTION UNTIL IT IS SIGNED BY THE ARCHITECT AND ENGINEER.

CONSULTANT

CODE AND SITE ANALYSIS

PROJECT NO: 863-0005
DATE: 08-28-2020

SHEET NO:

A0.20s

FOR CONSTRUCTION

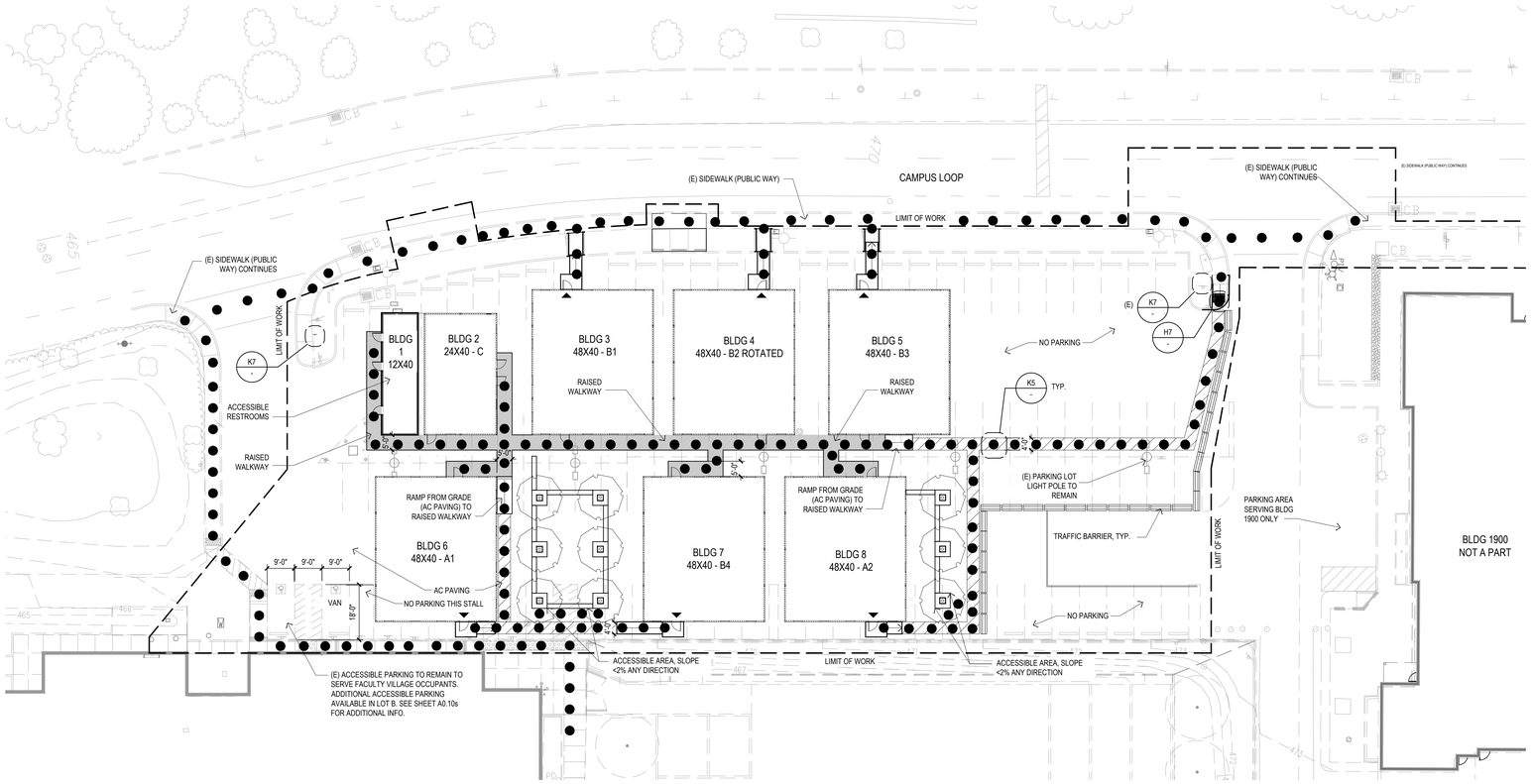

SITE ACCESSIBILITY PLAN 1" = 20'-0" F1

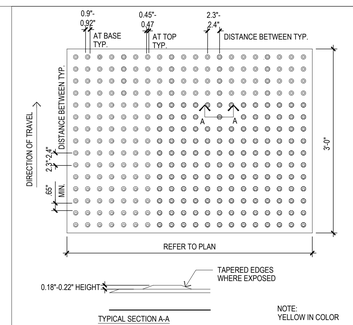

TRUNCATED DOME MAT - IN-LINE PATTERN 1" = 1'-0" H9

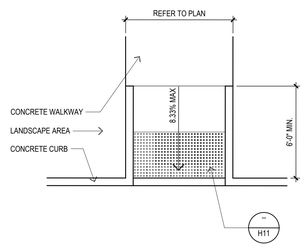

STRAIGHT CURB RAMP 1/4" = 1'-0" H7

EGRESS ONLY DOORS

PATH OF TRAVEL. (P.O.T.) CROSS SLOPE SHALL NOT EXCEED 2%. SEE NOTES K10/A0.10

LEGEND NO SCALE G1

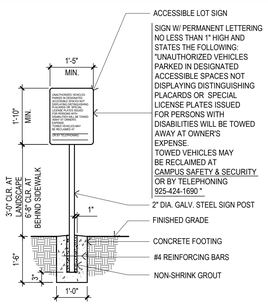

ACCESSIBLE PARKING LOT SIGN 1/2" = 1'-0" K7

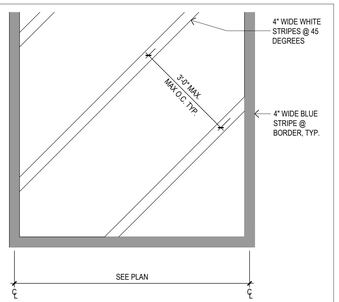

ACCESSIBLE PATH OF TRAVEL STRIPING 1/2" = 1'-0" K5

IDENTIFICATION STAMP
DIV. OF THE STATE ARCHITECT
APP: 01-119031 INC:
REVIEWED FOR
SS ☑ FLS ☑ ACS ☑
DATE: 10/22/2020

LPAS

2484 Natomas Park Drive Suite 100 Sacramento CA 95833
916 443 0335 lpasdesign.com Architecture + Design

LAS POSITAS
TEMPORARY FACULTY
VILLAGE MODULAR
OFFICES

LAS POSITAS COMMUNITY COLLEGE
LIVERMORE, CA

LICENSED ARCHITECT
PAUL A. DWYANE
C-29026-27
EXPIRES 12/31/2021
DATE
STATE OF CALIFORNIA

ARCHITECT'S STAMP APPROVAL

THIS DOCUMENT CONTAINS INFORMATION THAT IS PROPRIETARY TO LPAS, INC. AND IS FURNISHED FOR THE PURPOSES OF REVIEW, BIDDING OR CONSTRUCTION OF THE PROJECT LISTED IN THE JOB TITLE BOX ABOVE AND SHALL NOT BE USED FOR ANY OTHER PURPOSE OR RELEASED TO ANY OTHER PARTY WITHOUT THE WRITTEN CONSENT OF LPAS, INC. INFORMATION CONTAINED HEREIN IS AN INSTRUMENT OF PROFESSIONAL SERVICES AND SHALL REMAIN THE PROPERTY OF LPAS, INC. ALL RIGHTS RESERVED COPYRIGHT © 2009.

THIS DRAWING IS NOT FINAL OR TO BE USED FOR CONSTRUCTION UNTIL IT IS SIGNED BY THE ARCHITECT AND ENGINEER.

CONSULTANT

SITE ACCESSIBILITY PLAN

PROJECT NO:
DATE: 2020-08-28

SHEET NO:
A0.30s

FOR CONSTRUCTION

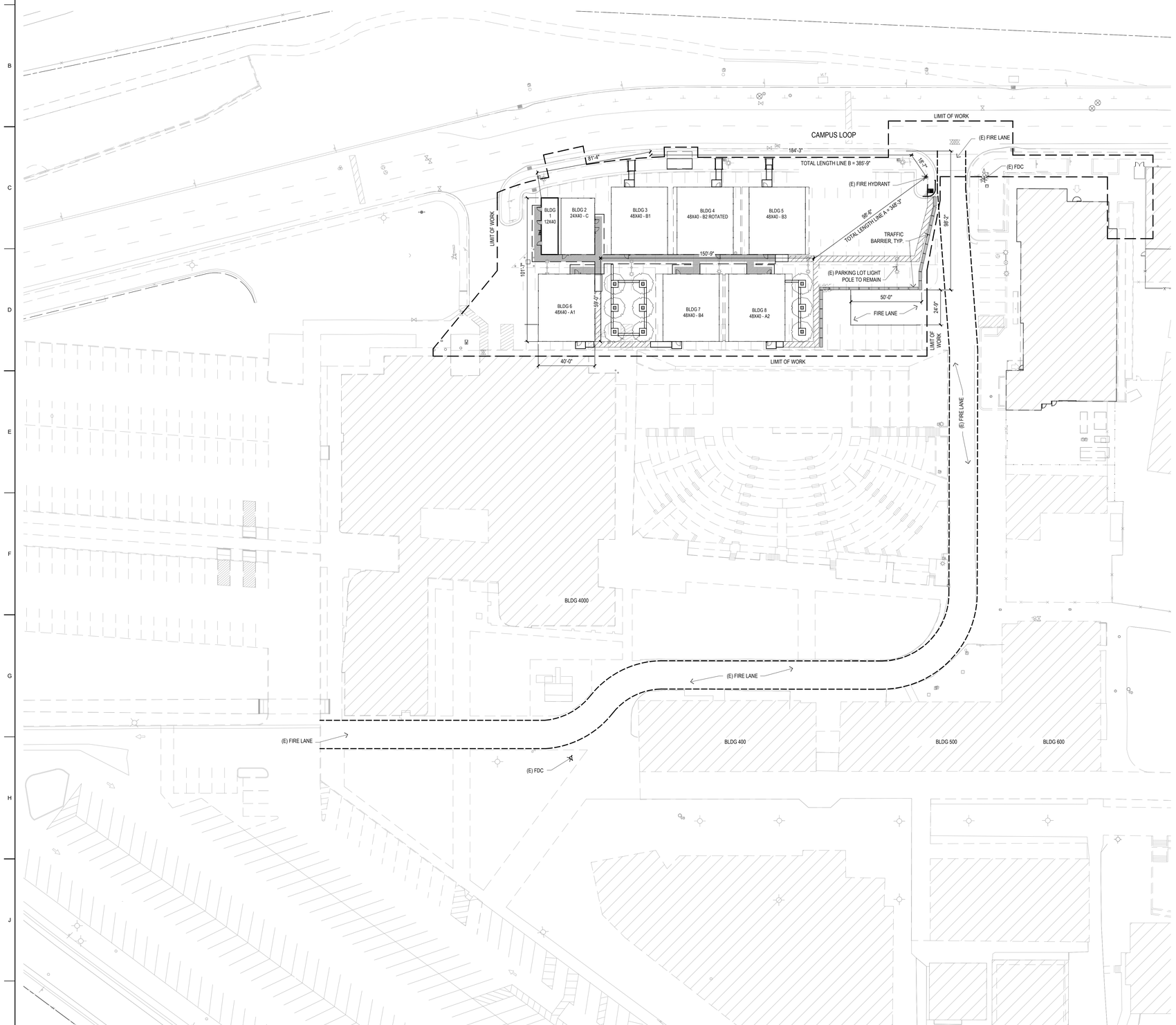

FIRE ACCESS PLAN
1" = 30'-0"
K3

DSA 810

FIRE & LIFE SAFETY SITE CONDITIONS SUBMITTAL

Division of the State Architect (DSA) documents referenced within this publication are available on the DSA Forms or DSA Publications webpages.

To facilitate the Division of the State Architect's (DSA) fire and life safety plan review of project site conditions, DSA requires the design professional to provide the following information at time of project submittal for projects consisting of construction of a new campus, construction of new building(s), additions to existing buildings, and for site alternate design means for fire department emergency vehicle access, and fire suppression water supply.

Information associated with compliance items 1 through 3 below is to be provided for all project types indicated above. Information associated with items 4 through 7 is to be completed when an alternate means is utilized. Acknowledgement by the school district and signature from the Local Fire Authority (LFA) is only required when an alternate design means is being requested.

The Project Information and Fire & Life Safety Information sections are to be completed for all projects and imaged onto the fire access site plan. When an alternate design/means is proposed, all sections on pages 1 and 2 are to be completed and imaged on the fire access site plan.

For additional information refer to the instructions at the end of this form and DSA Policy *PL 09-01: Fire Flow for Buildings.*

PROJECT INFORMATION	
School District/Owner:	CHABOT LAS POSITAS COMMUNITY COLLEGE DISTRICT
Project Name/School:	LAS POSITAS TEMPORARY FACULTY VILLAGE MODULAR OFFICES PROJECT
Project Address:	3000 CAMPUS HILL DRIVE, LIVERMORE, CA 94551

FIRE & LIFE SAFETY INFORMATION				
1.	Has a fire hydrant flow test been performed within the past 12 months? *(If yes, provide a copy of the test data.)*	Yes ☑		No ☐
2.	Was the fire hydrant water flow test performed as part of this LFA review?	Yes ☑		No ☐
3.	Is the project located within a designated fire hazard severity zone (FHSZ) as established by Cal-Fire? *(If yes, indicate FHSZ classification below.)*	Yes ☑		No ☐
	Refer to the following website for FHSZ locations: http://maps.fire.ca.gov/FHSZ/	Moderate ☐	High ☐	Very High ☐
	Wildland Interface Area (WIFA) *(If any designations are checked, project design must meet the requirements of CBC Chapter 7A.)*			WIFA ☑

DGS DSA 810 (revised 01/30/20) DIVISION OF THE STATE ARCHITECT — DEPARTMENT OF GENERAL SERVICES — Page 1 of 4 STATE OF CALIFORNIA

DSA 810
FIRE & LIFE SAFETY SITE CONDITIONS SUBMITTAL

CONDITION MEANS AND METHODS RESOLUTION		ALTERNATE ACCEPTED Yes	No	N/A	N/R
4.	Emergency vehicle access roadways do not meet CFC requirements.			✓	
4a.	**Acceptable Alternate:** Emergency vehicle and personnel access as proposed by the project architect is acceptable for providing fire suppression and protection of life and property.				
5.	**Fire Hydrants:** Number and spacing does not meet CFC requirements.			✓	
5a.	**Acceptable Alternate:** Number of fire hydrants and spacing as proposed by the project architect is acceptable for fire suppression and protection of life and property.	✓			
6.	**Fire Hydrants:** Water flow and pressure are less than CFC minimum.			✓	
6a.	**Acceptable Alternate:** The available flow and pressure is acceptable for providing fire suppression and protection of life and property.				
7.	Location of fire department connection(s) serving fire sprinkler systems or standpipe systems does not meet CFC requirements.			✓	
7a.	**Acceptable Alternate:** The location of fire department connection serving the fire sprinkler system and/or standpipe system is acceptable for providing fire suppression and protection of life and property.				

School District Acceptance of Acceptable Design Alternates

By signing this form, the school district acknowledges and accepts the proposed design as an alternative to California Building Code (CBC) and California Fire Code (CFC) minimum requirements, as indicated by one or more of the conditions indicated at items 4a, 5a, 6a, 7a, for providing fire and life safety protection of life and property.

Accepted by: Ann Cohen Title: VP Campus Planning

Signature: Date: 8/27/2020

LOCAL FIRE AUTHORITY (LFA) INFORMATION	
LFA Agency Name:	Livermore-Pleasanton Fire Dept
LFA Review Official:	
Title: Fire Marshal	Work Phone: 925 454-2330
Work Email:	

LFA Reviewer's Signature: Date: 8-27-20

DGS DSA 810 (revised 01/30/20) DIVISION OF THE STATE ARCHITECT — DEPARTMENT OF GENERAL SERVICES — Page 2 of 4 STATE OF CALIFORNIA

DSA FORM 810 - LOCAL FIRE AUTHORITY
NO SCALE
K1

IDENTIFICATION STAMP
DIV. OF THE STATE ARCHITECT
APP: 01-119031 INC:
REVIEWED FOR
SS ☑ FLS ☑ ACS ☑
DATE: 10/22/2020

LPAS

2484 Natomas Park Drive Suite 100 Sacramento CA 95833
916 443 0335 lpasdesign.com Architecture + Design

LAS POSITAS
TEMPORARY FACULTY
VILLAGE MODULAR
OFFICES

LAS POSITAS COMMUNITY COLLEGE
LIVERMORE, CA

LICENSED ARCHITECT
BURCE A. DWANG
STATE OF CALIFORNIA

ARCHITECT'S STAMP APPROVAL

THIS DOCUMENT CONTAINS INFORMATION THAT IS PROPRIETARY TO LPAS, INC. AND IS FURNISHED FOR THE PURPOSES OF REVIEW, BIDDING OR CONSTRUCTION OF THE PROJECT LISTED IN THE JOB TITLE BOX ABOVE AND SHALL NOT BE USED FOR ANY OTHER PURPOSE OR RELEASED TO ANY OTHER PARTY WITHOUT THE WRITTEN CONSENT OF LPAS, INC. INFORMATION CONTAINED HEREIN IS AN INSTRUMENT OF PROFESSIONAL SERVICES AND SHALL REMAIN THE PROPERTY OF LPAS, INC. ALL RIGHTS RESERVED COPYRIGHT © 2009.

THIS DRAWING IS NOT FINAL OR TO BE USED FOR CONSTRUCTION UNTIL IT IS SIGNED BY THE ARCHITECT AND ENGINEER.

CONSULTANT

FIRE ACCESS PLAN

PROJECT NO:
DATE: 2020-08-28

SHEET NO:
A0.40s

FOR CONSTRUCTION

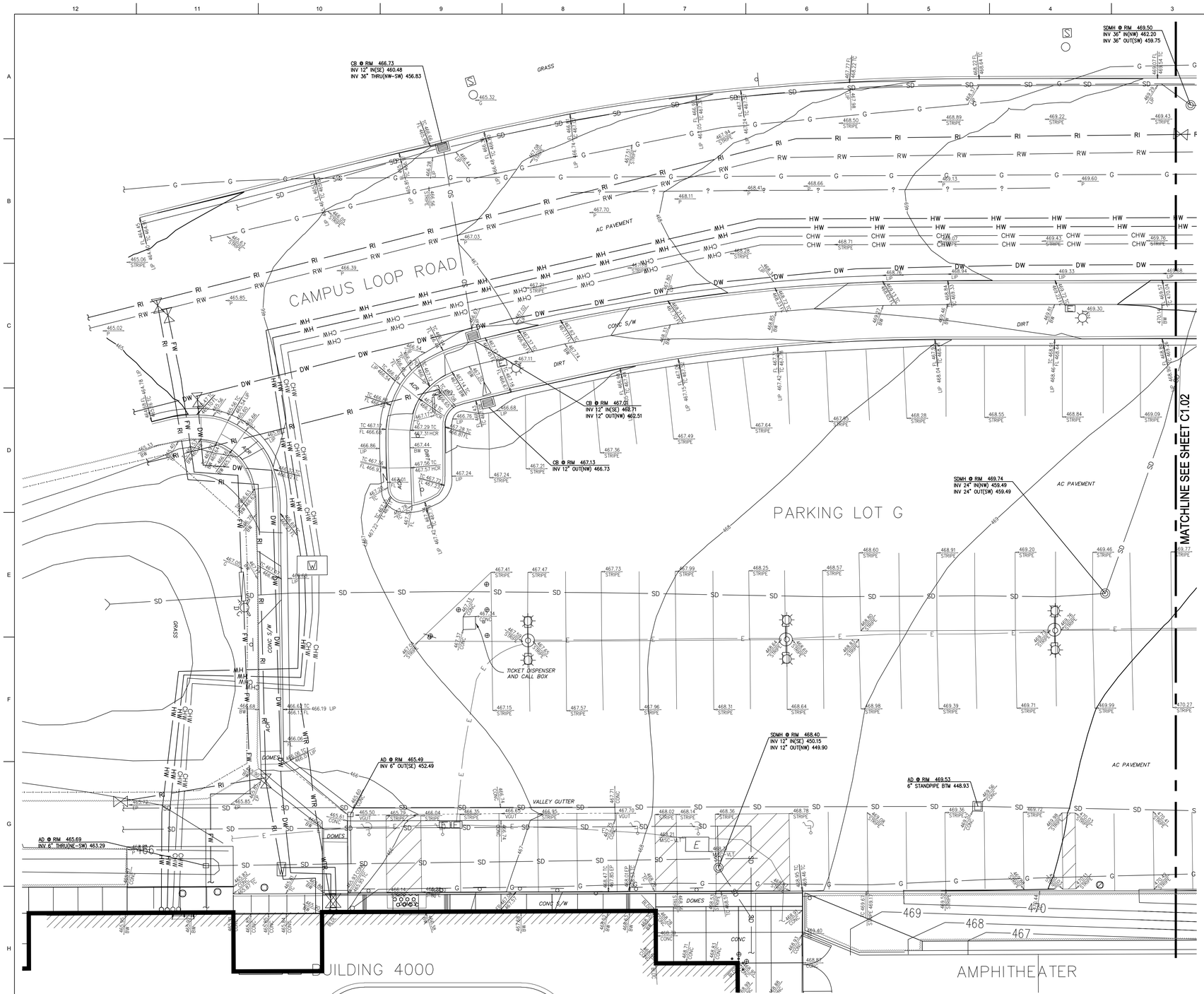

GENERAL NOTES

1. TOPOGRAPHIC SURVEY AND EXISTING UTILITIES PROVIDED BY THE SCHOOL DISTRICT

ABBREVIATIONS

AD	– AREA DRAIN
AP	– ANGLE POINT
BFP	– BACKFLOW PREVENTOR
BLDC	– BUILDING CORNER
BLDL	– BUILDING LINE
BOLL	– BOLLARD
BW	– BACK OF WALK
CAB	– CABINET
CLF	– CHAIN LINK FENCE
CNTNR	– CONTAINER
COM–PB	– COMMUNICATIONS PULLBOX
CONC	– CONCRETE
EP	– EDGE OF PAVEMENT
EPB	– ELECTRICAL PULLBOX
FDC	– FIRE DEPARTMENT CONNECTION
FH	– FIRE HYDRANT
FL	– FLOW LINE
FLP	– FLOW POINT
G	– GROUND
GRATE	– DRAIN INLET GRATE
GV	– GAS VALVE
HCR	– ACCESSIBLE RAMP
IF	– IRON FENCE
LIP	– LIP OF GUTTER
MISC–CO	– MISCELLANEOUS CLEANOUT
MISC–PB	– MISCELLANEOUS PULLBOX
MISC–VLT	– MISCELLANEOUS VAULT
P	– PAVEMENT ELEVATION
PNL	ELECTRIC PANEL
RAIL	– HANDRAIL / GUARDRAIL
RWL	– RAINWATER LEADER
SDMH	– STORM DRAIN MANHOLE
SSCO	– SANITARY SEWER CLEANOUT
STL	– STREET LIGHT
STL–D	– DOUBLE–ARM STREET LIGHT
STPB	– STREET LIGHT PULLBOX
TC	– TOP OF CURB
TC@CB	– TOP OF CURB AT CATCH BASIN
TOW	– TOP OF WALL
TS	– TOP OF STAIR
VGUT	– VALLEY GUTTER
WPB	– WATER VAULT
WV	– WATER VALVE

LEGEND

ALL DISTANCES AND DIMENSIONS ARE SHOWN IN FEET AND DECIMALS THEREOF.

- BUILDING FACE
- EDGE OF PAVEMENT
- CURB LINE
- CURB & GUTTER LINE
- RETAINING / SCREENING WALL, HEIGHT AS INDICATED
- 95 / 94 — CONTOURS
- FLOW LINE
- X — FENCE LINE, TYPE / HEIGHT AS INDICATED
- SD — STORM DRAIN LINE
- SS — SANITARY SEWER LINE
- WTR — WATER LINE
- DW — DOMESTIC WATER LINE
- FW — FIRE WATER LINE
- RW — RECYCLED WATER LINE
- G — NATURAL GAS LINE
- E — UNDERGROUND ELECTRIC LINE
- CMN — COMMUNICATION LINE
- ? — UNKNOWN UTILITY LINE
- CHW — CHILLED WATER LINE
- HW — HOT WATER LINE
- STORM DRAIN MANHOLE
- STORM DRAIN CLEANOUT
- DRAIN INLET ON CURB
- SANITARY SEWER CLEANOUT
- WATER METER / BOX
- BACKFLOW PREVENTOR
- WATER VALVE
- FIRE HYDRANT
- FIRE DEPARTMENT CONNECTION
- PIV — POST INDICATOR VALVE
- GV — GAS VALVE
- C — COMMUNICATIONS VAULT / PULLBOX
- E — ELECTRIC VAULT / PULLBOX
- ELECTROLIER ON TOP OF POLE
- DOUBLE ELECTROLIER WITH MAST ARMS
- STREET LIGHT PULLBOX
- MISCELLANEOUS PULLBOX
- SIGN
- BOLLARD
- 197.45 SYMBOL — 198.70 CONC — 195.74 BOW — 195.72 TC 194.72 FL — SPOT ELEVATION

SURVEY NOTES

1. ALL DISTANCES AND DIMENSIONS ARE SHOWN IN FEET AND DECIMALS THEREOF.
2. DATES OF FIELD SURVEY: 03/02/2020, 03/03/2020.
3. COORDINATES, BEARINGS, AND DISTANCES SHOWN ARE BASED ON AN ASSUMED COORDINATE SYSTEM. SEE SURVEY CONTROL TABLE BELOW FOR PROJECT COORDINATES. THE VERTICAL DATUM FOR THE SURVEY IS BASED ON LAS POSITAS COLLEGE BENCHMARK NO. 22 – 3/4" IRON PIPE WITH PLUG ON THE SOUTH SIDE OF THE LOOP ROAD, APPROX. 1100' FROM THE WEST ENTRY TO THE CAMPUS FROM COLLIER CANYON ROAD.

   ELEVATION = 466.71

SURVEY CONTROL TABLE

Point #	Elevation	Northing	Easting	Description
1	544.08	13183.80	13290.31	CUT X
3	540.66	13065.26	12784.71	CNTL
35	530.04	12503.70	12911.45	CUT X
37	537.93	12217.93	13008.92	60D FEATHER
38	515.89	11929.30	12605.77	CUT X

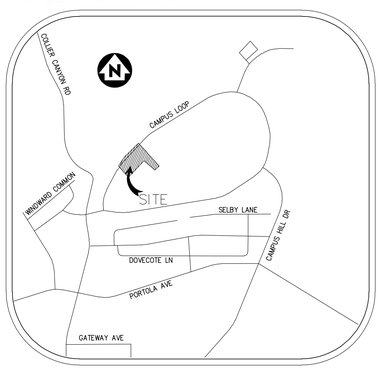

VICINITY MAP
N.T.S.

GRAPHIC SCALE
10 0 5 10 20 40
(IN FEET)
1 inch = 10 ft.

IDENTIFICATION STAMP
DIV. OF THE STATE ARCHITECT
APP: 01-119031 INC:
REVIEWED FOR
SS ☑ FLS ☑ ACS ☑
DATE: 10/22/2020

LPAS

2484 Natomas Park Drive Suite 100 Sacramento CA 95833
916 443 0335 lpasdesign.com Architecture + Design

LAS POSITAS
TEMPORARY FACULTY
VILLAGE MODULAR
OFFICES

LAS POSITAS COMMUNITY COLLEGE
LIVERMORE, CA

ARCHITECT'S STAMP APPROVAL

THIS DOCUMENT CONTAINS INFORMATION THAT IS PROPRIETARY TO LPAS, INC. AND IS FURNISHED FOR THE PURPOSES OF REVIEW, BIDDING OR CONSTRUCTION OF THE PROJECT LISTED IN THE JOB TITLE BOX ABOVE AND SHALL NOT BE USED FOR ANY OTHER PURPOSE OR RELEASED TO ANY OTHER PARTY WITHOUT THE WRITTEN CONSENT OF LPAS, INC. INFORMATION CONTAINED HEREIN IS AN INSTRUMENT OF PROFESSIONAL SERVICES AND SHALL REMAIN THE PROPERTY OF LPAS, INC. ALL RIGHTS RESERVED COPYRIGHT © 2009.

THIS DRAWING IS NOT FINAL OR TO BE USED FOR CONSTRUCTION UNTIL IT IS SIGNED BY THE ARCHITECT AND ENGINEER.

CONSULTANT

REGISTERED PROFESSIONAL ENGINEER STEVEN REYNOLDS C 77988 CIVIL STATE OF CALIFORNIA

BKF 100+ YEARS
ENGINEERS . SURVEYORS . PLANNERS
4670 WILLOW RD
SUITE 250
PLEASANTON, CA 94588
925-396-7700
925-396-7799 (FAX)

EXISTING CONDITIONS

PROJECT NO:
DATE: 2020-08-28

SHEET NO:
C1.01

FOR CONSTRUCTION

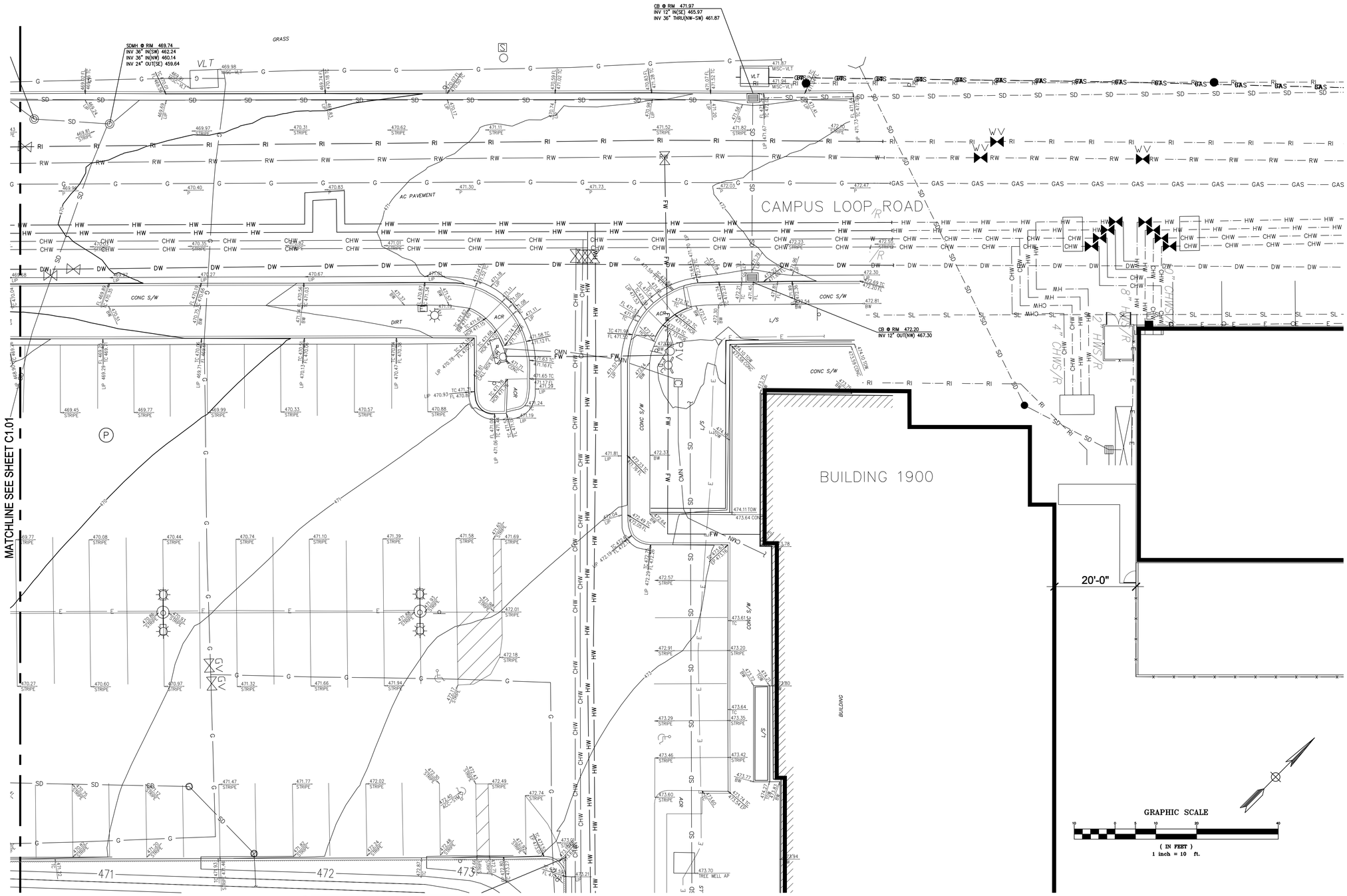

SURVEY NOTES

1. ALL DISTANCES AND DIMENSIONS ARE SHOWN IN FEET AND DECIMALS THEREOF.
2. DATES OF FIELD SURVEY: 03/02/2020, 03/03/2020.
3. COORDINATES, BEARINGS, AND DISTANCES SHOWN ARE BASED ON AN ASSUMED COORDINATE SYSTEM. SEE SURVEY CONTROL TABLE BELOW FOR PROJECT COORDINATES. THE VERTICAL DATUM FOR THE SURVEY IS BASED ON LAS POSITAS COLLEGE BENCHMARK NO. 22 – 3/4" IRON PIPE WITH PLUG ON THE SOUTH SIDE OF THE LOOP ROAD, APPROX. 1100' FROM THE WEST ENTRY TO THE CAMPUS FROM COLLIER CANYON ROAD.

   ELEVATION = 466.71

SURVEY CONTROL TABLE

Point #	Elevation	Northing	Easting	Description
1	544.08	13183.80	13290.31	CUT X
3	540.66	13065.26	12784.71	CNTL
35	530.04	12503.70	12911.45	CUT X
37	537.93	12217.93	13008.92	60D FEATHER
38	515.89	11929.30	12605.77	CUT X

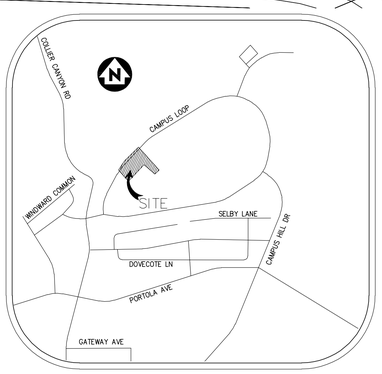

VICINITY MAP

N.T.S.

ABBREVIATIONS

AD	– AREA DRAIN	GV	– GAS VALVE
AP	– ANGLE POINT	HCR	– ACCESSIBLE RAMP
BFP	– BACKFLOW PREVENTOR	IF	– IRON FENCE
BLDC	– BUILDING CORNER	LIP	– LIP OF GUTTER
BLDL	– BUILDING LINE	MISC–CO	– MISCELLANEOUS CLEANOUT
BOLL	– BOLLARD	MISC–PB	– MISCELLANEOUS PULLBOX
BW	– BACK OF WALK	MISC–VLT	– MISCELLANEOUS VAULT
CAB	– CABINET	P	– PAVEMENT ELEVATION
CLF	– CHAIN LINK FENCE	PNL	– ELECTRIC PANEL
CNTNR	– CONTAINER	RAIL	– HANDRAIL / GUARDRAIL
COM–PB	– COMMUNICATIONS PULLBOX	RWL	– RAINWATER LEADER
CONC	– CONCRETE	SDMH	– STORM DRAIN MANHOLE
EP	– EDGE OF PAVEMENT	SSCO	– SANITARY SEWER CLEANOUT
EPB	– ELECTRICAL PULLBOX	STL	– STREET LIGHT
FDC	– FIRE DEPARTMENT CONNECTION	STL–D	– DOUBLE–ARM STREET LIGHT
FH	– FIRE HYDRANT	STPB	– STREET LIGHT PULLBOX
FL	– FLOW LINE	TC	– TOP OF CURB
FLP	– FLOW POINT	TC@CB	– TOP OF CURB AT CATCH BASIN
G	– GROUND	TOW	– TOP OF WALL
GRATE	– DRAIN INLET GRATE	TS	– TOP OF STAIR
		VGUT	– VALLEY GUTTER
		WPB	– WATER VAULT
		WV	– WATER VALVE

GENERAL NOTES

1. TOPOGRAPHIC SURVEY AND EXISTING UTILITIES PROVIDED BY THE SCHOOL DISTRICT

LEGEND

ALL DISTANCES AND DIMENSIONS ARE SHOWN IN FEET AND DECIMALS THEREOF.

- BUILDING FACE
- EDGE OF PAVEMENT
- CURB LINE
- CURB & GUTTER LINE
- RETAINING / SCREENING WALL, HEIGHT AS INDICATED
- 95 — CONTOURS
- 94
- FLOW LINE
- X — FENCE LINE, TYPE / HEIGHT AS INDICATED
- SD — STORM DRAIN LINE
- SS — SANITARY SEWER LINE
- WTR — WATER LINE
- DW — DOMESTIC WATER LINE
- FW — FIRE WATER LINE
- RW — RECYCLED WATER LINE
- G — NATURAL GAS LINE
- E — UNDERGROUND ELECTRIC LINE
- CMN — COMMUNICATION LINE
- ? — UNKNOWN UTILITY LINE
- CHW — CHILLED WATER LINE
- HW — HOT WATER LINE

- STORM DRAIN MANHOLE
- STORM DRAIN CLEANOUT
- DRAIN INLET ON CURB
- SANITARY SEWER CLEANOUT
- V — WATER METER / BOX
- BACKFLOW PREVENTOR
- WATER VALVE
- FIRE HYDRANT
- FIRE DEPARTMENT CONNECTION
- PIV — POST INDICATOR VALVE
- GV — GAS VALVE
- C — COMMUNICATIONS VAULT / PULLBOX
- E — ELECTRIC VAULT / PULLBOX
- ELECTROLIER ON TOP OF POLE
- DOUBLE ELECTROLIER WITH MAST ARMS
- STREET LIGHT PULLBOX
- MISCELLANEOUS PULLBOX
- SIGN
- BOLLARD
- 472.30 STRIPE, 198.76 TC@BC, 198.76 BOW, 195.12 TC HDR PVT — SPOT ELEVATION

IDENTIFICATION STAMP
DIV. OF THE STATE ARCHITECT
APP: 01-119031 INC:
REVIEWED FOR
SS ☑ FLS ☑ ACS ☑
DATE: 10/22/2020

LPAS

2484 Natomas Park Drive Suite 100 Sacramento CA 95833
916 443 0335 lpasdesign.com Architecture + Design

LAS POSITAS
TEMPORARY FACULTY
VILLAGE MODULAR
OFFICES

LAS POSITAS COMMUNITY COLLEGE
LIVERMORE, CA

ARCHITECT'S STAMP APPROVAL

THIS DOCUMENT CONTAINS INFORMATION THAT IS PROPRIETARY TO LPAS, INC. AND IS FURNISHED FOR THE PURPOSES OF REVIEW, BIDDING OR CONSTRUCTION OF THE PROJECT LISTED IN THE JOB TITLE BOX ABOVE AND SHALL NOT BE USED FOR ANY OTHER PURPOSE OR RELEASED TO ANY OTHER PARTY WITHOUT THE WRITTEN CONSENT OF LPAS, INC. INFORMATION CONTAINED HEREIN IS AN INSTRUMENT OF PROFESSIONAL SERVICES AND SHALL REMAIN THE PROPERTY OF LPAS, INC. ALL RIGHTS RESERVED COPYRIGHT © 2009.

THIS DRAWING IS NOT FINAL OR TO BE USED FOR CONSTRUCTION UNTIL IT IS SIGNED BY THE ARCHITECT AND ENGINEER.

CONSULTANT

REGISTERED PROFESSIONAL ENGINEER STEVEN REYNOLDS C77988 CIVIL STATE OF CALIFORNIA

BKF 100+ YEARS
ENGINEERS . SURVEYORS . PLANNERS
4670 WILLOW RD
SUITE 250
PLEASANTON, CA 94588
925-396-7700
925-396-7799 (FAX)

EXISTING CONDITIONS

PROJECT NO:

DATE: 2020-08-28

SHEET NO:

C1.02

FOR CONSTRUCTION

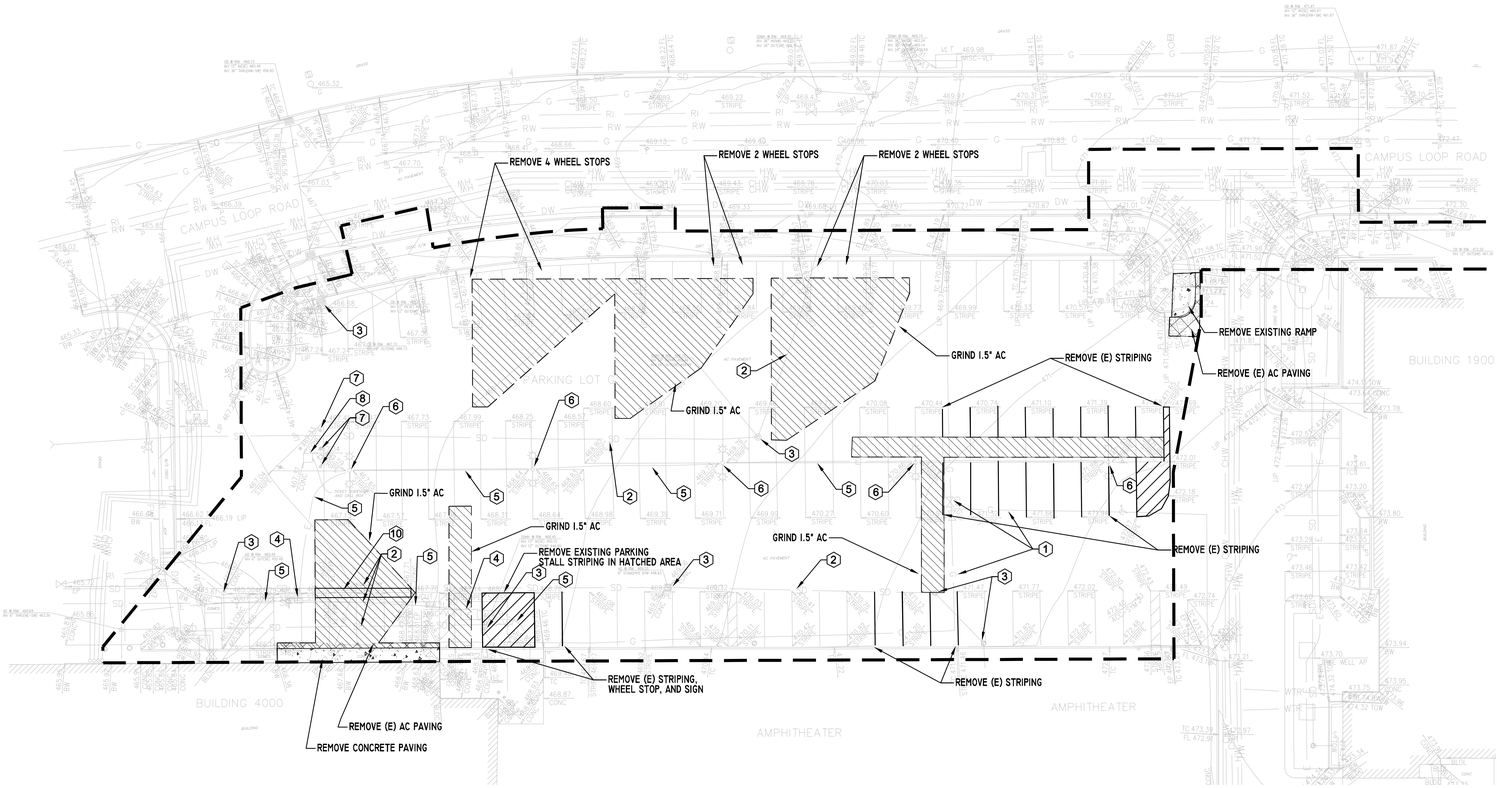

LEGEND

- REMOVE (E) ASPHALT PAVEMENT SECTION
- GRIND 1.5" AC FOR OVERLAY
- REMOVE EXISTING CONCRETE SECTION
- NEATLY SAWCUT EXISTING PAVEMENT
- LIMIT OF WORK

GENERAL NOTES

1. CALL 811 USA UNDERGROUND BEFORE YOU DIG.
2. EXISTING IRRIGATION TO REMAIN SHALL BE PROTECTED AND REPAIRED IF DAMAGED.
3. ALL IRRIGATION PIPING, STRUCTURES, AND EQUIPMENT DAMAGED DURING CONSTRUCTION SHALL BE REPLACED IN KIND.
4. SEE EROSION CONTROL PLAN FOR PROTECTION OF DRAIN INLETS.
5. ALL EXISTING UTILITIES WHETHER SHOWN OR NOT ARE TO REMAIN AND BE PROTECTED FROM DAMAGE.

DEMOLITION NOTES

1. EXISTING GAS LINE AND VALVES TO REMAIN. PROTECT IN PLACE
2. EXISTING STORM DRAIN LINE TO REMAIN. PROTECT IN PLACE
3. EXISTING STORM STRUCTURE TO REMAIN. PROTECT IN PLACE
4. EXISTING ELECTRICAL VAULT TO REMAIN. PROTECT IN PLACE
5. EXISTING ELECTRICAL TO REMAIN. PROTECT IN PLACE
6. EXISTING LIGHTPOLE TO REMAIN. PROTECT IN PLACE
7. REMOVE AND REPLACE EXISTING TICKET DISPENSER BOLLARDS AS NEEDED FOR UTILITY TRENCHING AND/OR CONSTRUCTION METHODS (TYPICAL)
8. EXISTING TICKET DISPENSER TO REMAIN. PROTECT IN PLACE
9. EXISTING CURB AND GUTTER TO REMAIN. PROTECT IN PLACE
10. REMOVE EXISTING CONCRETE VALLEY GUTTER

GRAPHIC SCALE

20 0 10 20 40 80

(IN FEET)
1 inch = 20 ft.

IDENTIFICATION STAMP
DIV. OF THE STATE ARCHITECT
APP: 01-119031 INC:
REVIEWED FOR
SS ☑ FLS ☑ ACS ☑
DATE: 10/22/2020

LPAS

2484 Natomas Park Drive Suite 100 Sacramento CA 95833
916 443 0335 lpasdesign.com Architecture + Design

LAS POSITAS
TEMPORARY FACULTY
VILLAGE MODULAR
OFFICES

LAS POSITAS COMMUNITY COLLEGE
LIVERMORE, CA

ARCHITECT'S STAMP APPROVAL

THIS DOCUMENT CONTAINS INFORMATION THAT IS PROPRIETARY TO LPAS, INC. AND IS FURNISHED FOR THE PURPOSES OF REVIEW, BIDDING OR CONSTRUCTION OF THE PROJECT LISTED IN THE JOB TITLE BOX ABOVE AND SHALL NOT BE USED FOR ANY OTHER PURPOSE OR RELEASED TO ANY OTHER PARTY WITHOUT THE WRITTEN CONSENT OF LPAS, INC. INFORMATION CONTAINED HEREIN IS AN INSTRUMENT OF PROFESSIONAL SERVICES AND SHALL REMAIN THE PROPERTY OF LPAS, INC. ALL RIGHTS RESERVED COPYRIGHT © 2009.

THIS DRAWING IS NOT FINAL OR TO BE USED FOR CONSTRUCTION UNTIL IT IS SIGNED BY THE ARCHITECT AND ENGINEER.

CONSULTANT

REGISTERED PROFESSIONAL ENGINEER
STEVEN REYNOLDS
C 77988
CIVIL
STATE OF CALIFORNIA

BKF 100+ YEARS
ENGINEERS . SURVEYORS . PLANNERS
4670 WILLOW RD
SUITE 250
PLEASANTON, CA 94588
925-396-7700
925-396-7799 (FAX)

SITE DEMOLITION PLAN

PROJECT NO:
DATE: 2020-08-28

SHEET NO:
C2.00

FOR CONSTRUCTION

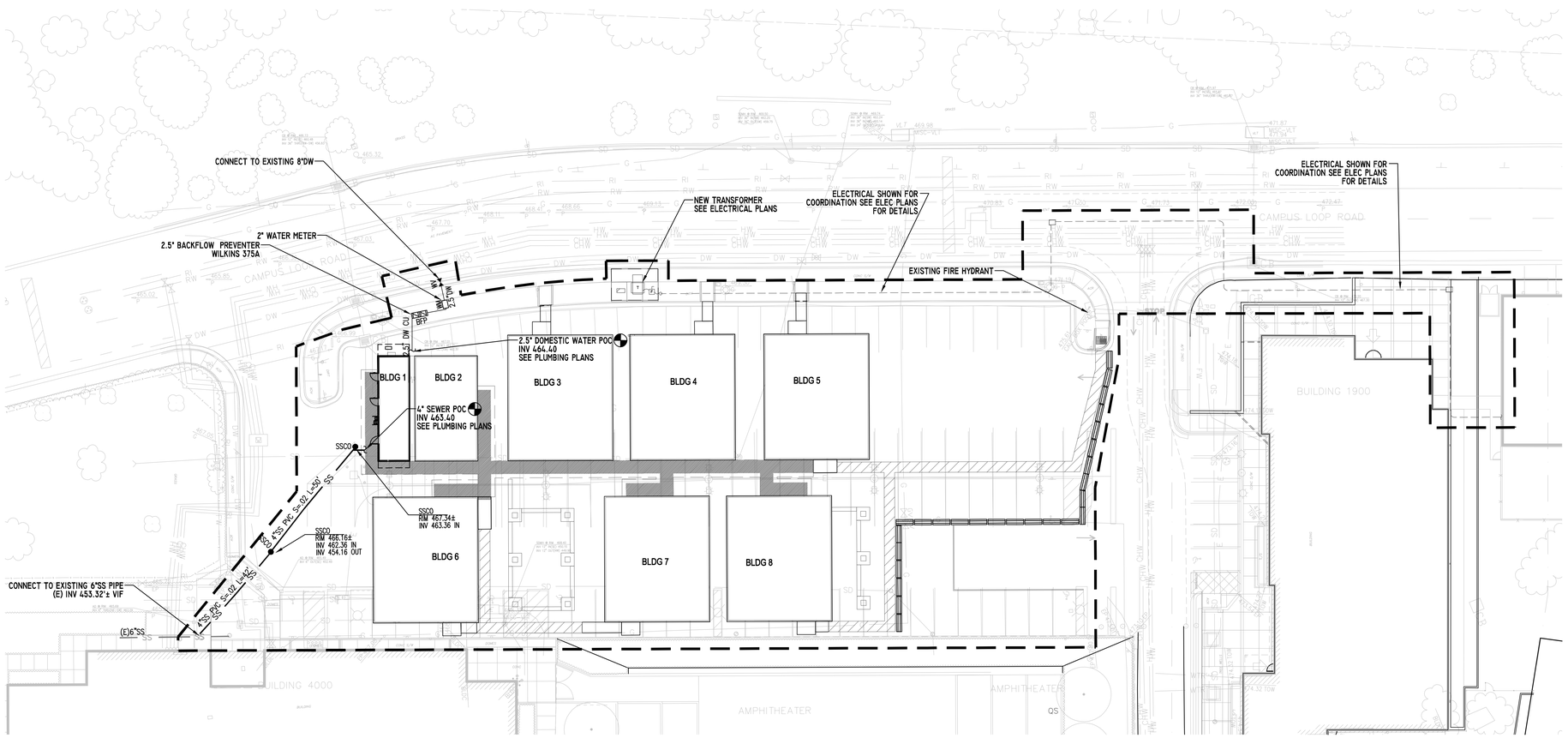

LEGEND

DW DW	DOMESTIC WATER PIPE
FW FW	FIRE WATER PIPE
SS SS	SANITARY SEWER PIPE
	LIMIT OF WORK
WV	WATER VALVE
BFP	BACKFLOW PREVENTER
WM	WATER METER
FH	FIRE HYDRANT
	SANITARY SEWER MANHOLE
SSCO	SANITARY SEWER CLEANOUT

ABBREVIATIONS

BFP	BACKFLOW PREVENTER
DW	DOMESTIC WATER
FH	FIRE HYDRANT
FW	FIRE WATER
INV	INVERT ELEVATION
POC	POINT OF CONNECTION
RW	RECYCLED WATER
SD	STORM DRAIN
SS	SANITARY SEWER
SSCO	SANITARY SEWER CLEANOUT
SSMH	SANITARY SEWER MANHOLE
VIF	VERIFY IN FIELD
WM	WATER METER
WV	WATER VALVE

GENERAL NOTES

1. SITE PLAN PROVIDED BY THE ARCHITECT
2. CALL 811 USA UNDERGROUND BEFORE YOU DIG
3. SEWER PIPE SHALL BE PVC SDR 26
4. SEWER AND WATER SHALL HAVE 4' HORIZONTAL CLEARANCE AND 1' VERTICAL CLEARANCE
5. POTHOLE EXISTING UTILITY CROSSINGS AS FIRST ORDER OF WORK
6. CONTRACTOR SHALL START SEWER PIPE INSTALLATION AT THE DOWNSTREAM POINT OF CONNECTION AND WORK UPSTREAM
7. CONTRACTOR SHALL REPAIR AND RESTORE EXISTING HARDSCAPE AND LANDSCAPE DISTURBED DUE TO TRENCHING AND/OR CONSTRUCTION ACTIVITIES. SEE SITE RESTORATION AND REHABILITATION SPECIFICATION 32 00 01 FOR ADDITIONAL INFORMATION.

GRAPHIC SCALE

20 0 10 20 40 80

(IN FEET)
1 inch = 20 ft.

IDENTIFICATION STAMP
DIV. OF THE STATE ARCHITECT
APP: 01-119031 INC:
REVIEWED FOR
SS ☑ FLS ☑ ACS ☑
DATE: 10/22/2020

LPAS

2484 Natomas Park Drive Suite 100 Sacramento CA 95833
916 443 0335 lpasdesign.com Architecture + Design

LAS POSITAS
TEMPORARY FACULTY
VILLAGE MODULAR
OFFICES

LAS POSITAS COMMUNITY COLLEGE
LIVERMORE, CA

ARCHITECT'S STAMP APPROVAL

THIS DOCUMENT CONTAINS INFORMATION THAT IS PROPRIETARY TO LPAS, INC. AND IS FURNISHED FOR THE PURPOSES OF REVIEW, BIDDING OR CONSTRUCTION OF THE PROJECT LISTED IN THE JOB TITLE BOX ABOVE AND SHALL NOT BE USED FOR ANY OTHER PURPOSE OR RELEASED TO ANY OTHER PARTY WITHOUT THE WRITTEN CONSENT OF LPAS, INC. INFORMATION CONTAINED HEREIN IS AN INSTRUMENT OF PROFESSIONAL SERVICES AND SHALL REMAIN THE PROPERTY OF LPAS, INC. ALL RIGHTS RESERVED COPYRIGHT © 2009.

THIS DRAWING IS NOT FINAL OR TO BE USED FOR CONSTRUCTION UNTIL IT IS SIGNED BY THE ARCHITECT AND ENGINEER.

CONSULTANT

REGISTERED PROFESSIONAL ENGINEER
STEVEN REYNOLDS
C 77988
CIVIL
STATE OF CALIFORNIA

BKF 100+ YEARS
ENGINEERS . SURVEYORS . PLANNERS
4670 WILLOW RD
SUITE 250
PLEASANTON, CA 94588
925-396-7700
925-396-7799 (FAX)

SITE UTILITY PLAN

PROJECT NO:
DATE: 2020-08-28

SHEET NO:
C3.00

FOR CONSTRUCTION

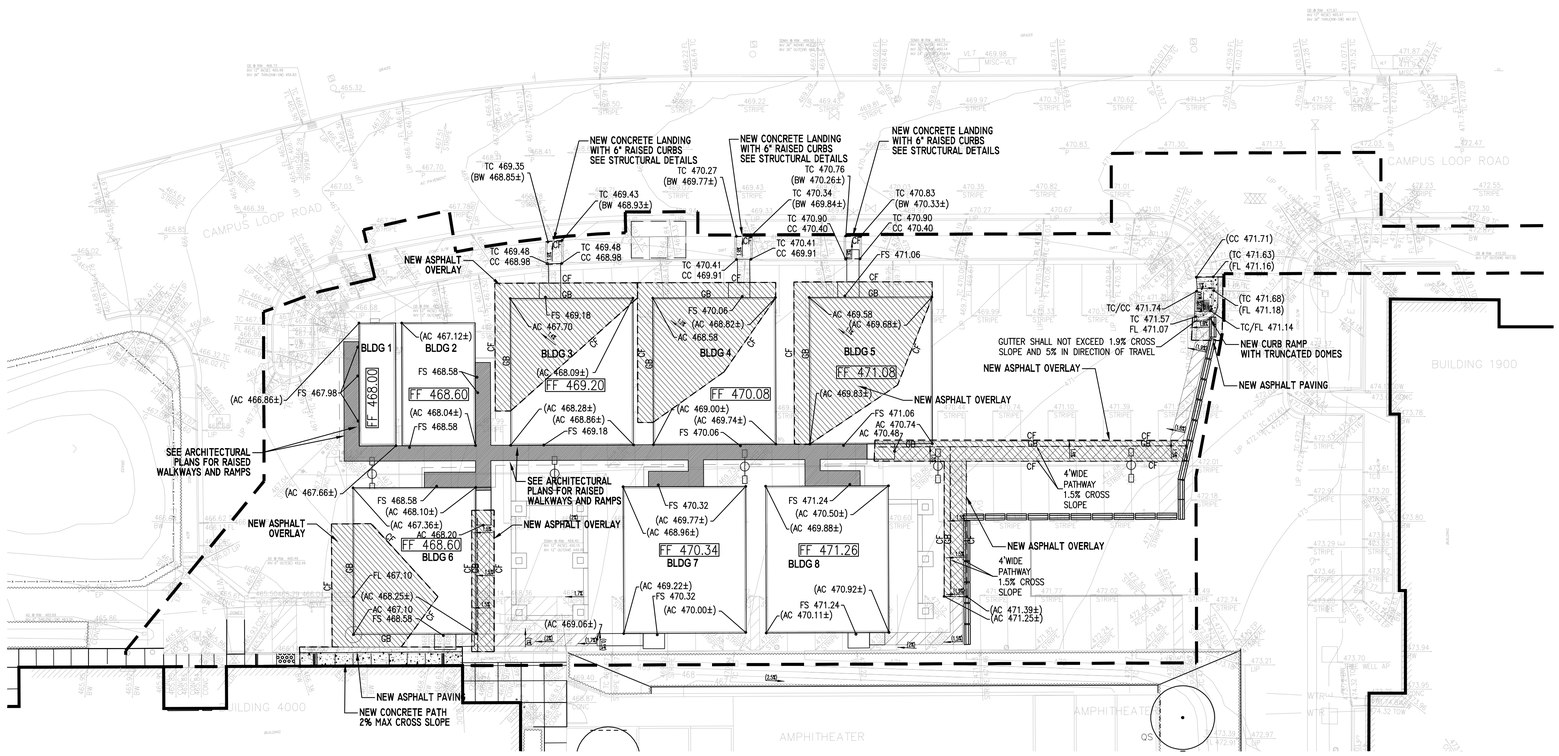

ABBREVIATIONS

AC	ASPHALT CONCRETE PAVEMENT
BC	BOTTOM OF CURB
BW	BACK OF WALK
CC	CONCRETE PAVEMENT
CF	CONFORM
EX	EXISTING
FF	FINISHED FLOOR
FL	FLOWLINE
FS	FINISHED SURFACE
SDDI	STORM DRAIN INLET
TC	TOP OF CURB

LEGEND

TC 108.40 / AC 107.90	GRADE CALL-OUT
(107.20)	EXISTING GRADE ELEVATION/CONFORM
3.1%	SLOPE/DIRECTION
	LIMIT OF WORK
	GRADE BREAK
	CONFORM
	NEW VEHICULAR ASPHALT (2 / C-700)
	NEW AC OVERLAY (5 / C-700) (9 / C-700)
	NEW CONCRETE (3 / C-700)

GENERAL NOTES

1.) ACCESSIBLE PATHS OF TRAVEL SHALL BE STABLE, FIRM AND SLIP RESISTANT IN CONFORMANCE WITH 2019 CBC 11B-302.1

2.) PATH OF TRAVEL SHALL NOT EXCEED 1:48 MAX CROSS SLOPE. EXISTING SLOPES ARE INTERPOLATED FROM TOPOGRAPHIC SURVEY INFORMATION PROVIDED. CONTRACTOR SHALL VERIFY CROSS SLOPES IN FIELD ALONG DESIGNATED ACCESSIBLE PATH OF TRAVEL AND REPLACE PAVEMENT TO MEET PROPOSED GRADES AND MAXIMUM CROSS SLOPES AS NEEDED.

3.) CONTRACTOR SHALL VERIFY EXISTING SLOPES AT PROPOSED STRIPED ACCESSIBLE PATHWAYS AS SHOWN ON C4.00 AND REMOVE AND REPLACE EXISTING PAVING AS NECESSARY TO MEET THE MAXIMUM SLOPE REQUIREMENTS FOR THE PATHWAY

GRAPHIC SCALE

20 0 10 20 40 80

(IN FEET)
1 inch = 20 ft.

IDENTIFICATION STAMP
DIV. OF THE STATE ARCHITECT
APP: 01-119031 INC:
REVIEWED FOR
SS ☑ FLS ☑ ACS ☑
DATE: 10/22/2020

LPAS
2484 Natomas Park Drive Suite 100 Sacramento CA 95833
916 443 0335 lpasdesign.com Architecture + Design

LAS POSITAS
TEMPORARY FACULTY
VILLAGE MODULAR
OFFICES

LAS POSITAS COMMUNITY COLLEGE
LIVERMORE, CA

ARCHITECT'S STAMP APPROVAL

THIS DOCUMENT CONTAINS INFORMATION THAT IS PROPRIETARY TO LPAS, INC. AND IS FURNISHED FOR THE PURPOSES OF REVIEW, BIDDING OR CONSTRUCTION OF THE PROJECT LISTED IN THE JOB TITLE BOX ABOVE AND SHALL NOT BE USED FOR ANY OTHER PURPOSE OR RELEASED TO ANY OTHER PARTY WITHOUT THE WRITTEN CONSENT OF LPAS, INC. INFORMATION CONTAINED HEREIN IS AN INSTRUMENT OF PROFESSIONAL SERVICES AND SHALL REMAIN THE PROPERTY OF LPAS, INC. ALL RIGHTS RESERVED COPYRIGHT © 2009.

THIS DRAWING IS NOT FINAL OR TO BE USED FOR CONSTRUCTION UNTIL IT IS SIGNED BY THE ARCHITECT AND ENGINEER.

CONSULTANT

REGISTERED PROFESSIONAL ENGINEER
STEGEN REYNOLDS
C77988
CIVIL
STATE OF CALIFORNIA

BKF 100+ YEARS
ENGINEERS . SURVEYORS . PLANNERS
4670 WILLOW RD
SUITE 250
PLEASANTON, CA 94588
925-396-7700
925-396-7799 (FAX)

SITE PAVING AND GRADING PLAN

PROJECT NO:
DATE: 2020-08-28

SHEET NO:
C4.00

FOR CONSTRUCTION

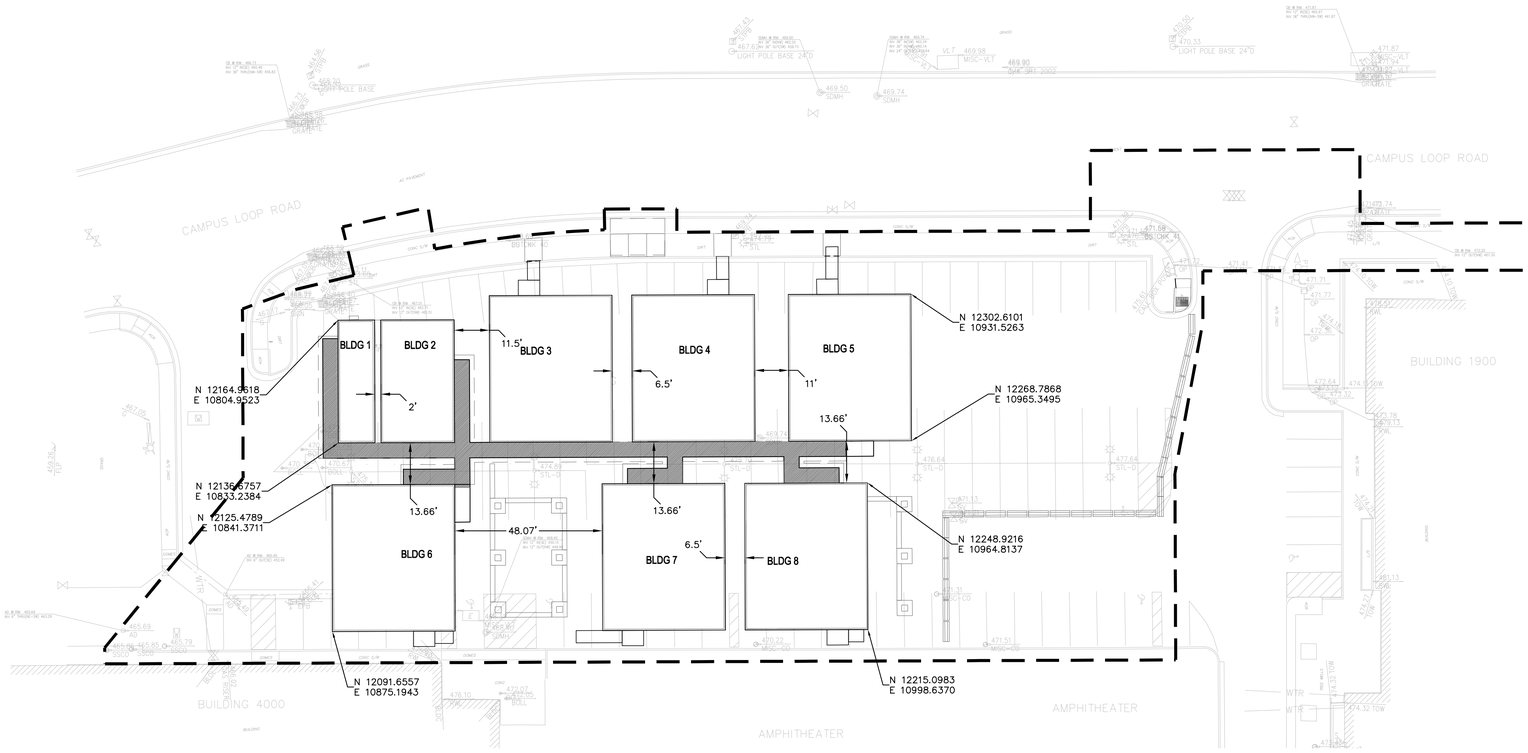

SURVEY NOTES

1. COORDINATES, BEARINGS, AND DISTANCES SHOWN ARE BASED ON AN ASSUMED COORDINATE SYSTEM. SEE SURVEY CONTROL TABLE BELOW FOR PROJECT COORDINATES. THE VERTICAL DATUM FOR THE SURVEY IS BASED ON LAS POSITAS COLLEGE BENCHMARK NO. 22 – 3/4" IRON PIPE WITH PLUG ON THE SOUTH SIDE OF THE LOOP ROAD, APPROX. 1100' FROM THE WEST ENTRY TO THE CAMPUS FROM COLLIER CANYON ROAD.

   ELEVATION = 466.71

2. SEE SHEET C1.01 AND C1.02 FOR EXISTING CONDITIONS AND ADDITIONAL SITE INFORMATION

SURVEY CONTROL TABLE

Point #	Elevation	Northing	Easting	Description
1	544.08	13183.80	13290.31	CUT X
3	540.66	13065.26	12784.71	CNTL
35	530.04	12503.70	12911.45	CUT X
37	537.93	12217.93	13008.92	60D FEATHER
38	515.89	11929.30	12605.77	CUT X

LEGEND

LIMIT OF WORK

GRAPHIC SCALE

20 0 10 20 40 80

(IN FEET)
1 inch = 20 ft.

IDENTIFICATION STAMP
DIV. OF THE STATE ARCHITECT
APP: 01-119031 INC:
REVIEWED FOR
SS ☑ FLS ☑ ACS ☑
DATE: 10/22/2020

LPAS

2484 Natomas Park Drive Suite 100 Sacramento CA 95833
916 443 0335 lpasdesign.com Architecture + Design

LAS POSITAS
TEMPORARY FACULTY
VILLAGE MODULAR
OFFICES

LAS POSITAS COMMUNITY COLLEGE
LIVERMORE, CA

ARCHITECT'S STAMP APPROVAL

THIS DOCUMENT CONTAINS INFORMATION THAT IS PROPRIETARY TO LPAS, INC. AND IS FURNISHED FOR THE PURPOSES OF REVIEW, BIDDING OR CONSTRUCTION OF THE PROJECT LISTED IN THE JOB TITLE BOX ABOVE AND SHALL NOT BE USED FOR ANY OTHER PURPOSE OR RELEASED TO ANY OTHER PARTY WITHOUT THE WRITTEN CONSENT OF LPAS, INC. INFORMATION CONTAINED HEREIN IS AN INSTRUMENT OF PROFESSIONAL SERVICES AND SHALL REMAIN THE PROPERTY OF LPAS, INC. ALL RIGHTS RESERVED COPYRIGHT © 2009.

THIS DRAWING IS NOT FINAL OR TO BE USED FOR CONSTRUCTION UNTIL IT IS SIGNED BY THE ARCHITECT AND ENGINEER.

CONSULTANT

REGISTERED PROFESSIONAL ENGINEER
STEVEN REYNOLDS
C 77988
CIVIL
STATE OF CALIFORNIA

BKF 100+ YEARS
ENGINEERS . SURVEYORS . PLANNERS
4670 WILLOW RD
SUITE 250
PLEASANTON, CA 94588
925-396-7700
925-396-7799 (FAX)

HORIZONTAL CONTROL PLAN

PROJECT NO:
DATE: 2020-08-28

SHEET NO:
C5.00

FOR CONSTRUCTION

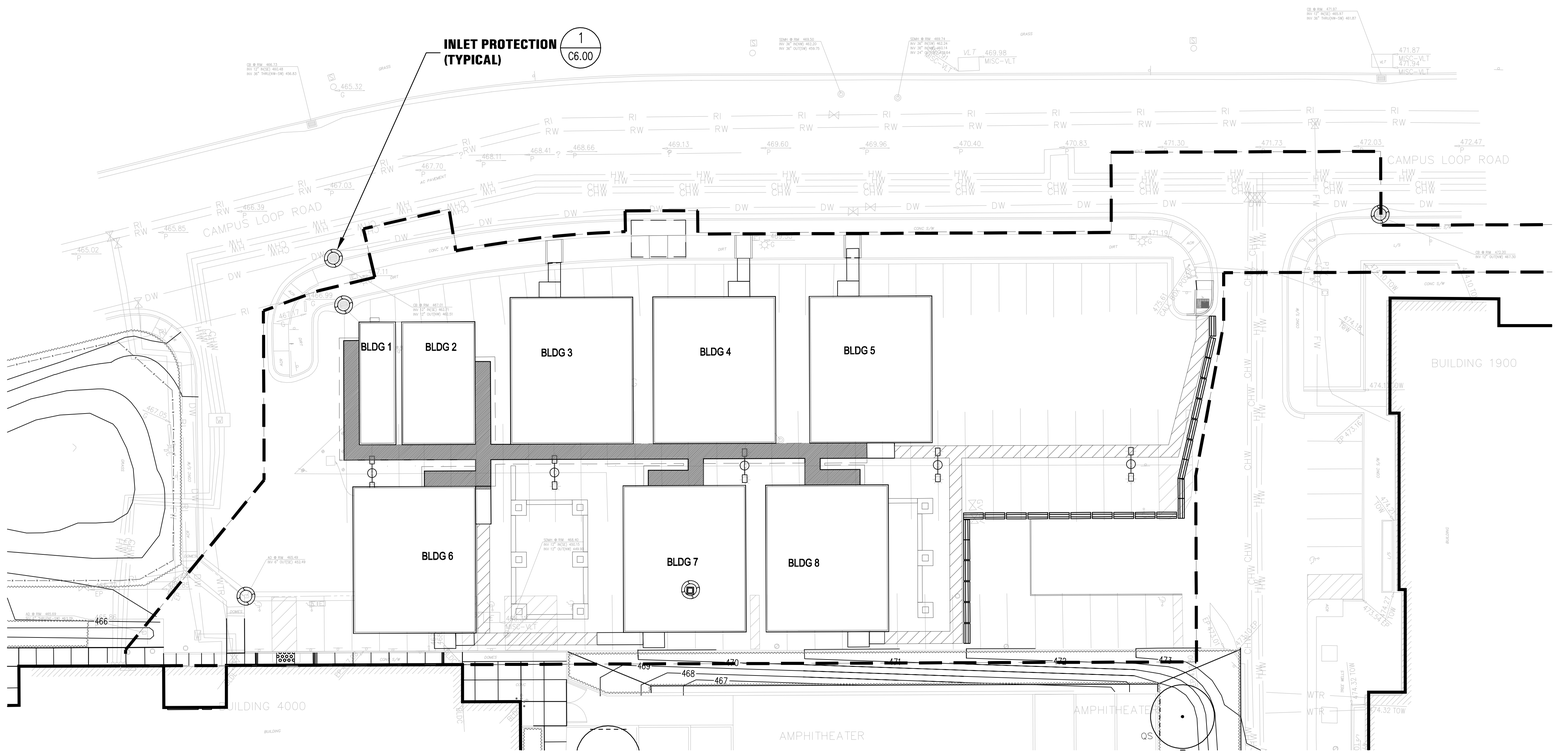

LEGEND

STORM DRAIN INLET PROTECTION

LIMIT OF WORK

EROSION CONTROL NOTES

1. SEE COUNTY OF ALAMEDA EROSION CONTROL TEMPLATES FOR BEST MANAGEMENT PRACTICES AND EROSION CONTROL DETAILS.
2. FIBER ROLLS SHALL BE INSTALLED AROUND THE PERIMETER ALONG THE CONSTRUCTION FENCE.
3. THIS SHEET IS INTENDED FOR EROSION CONTROL ONLY
4. THIS PLAN MAY NOT COVER ALL THE SITUATIONS THAT ARISE DURING CONSTRUCTION DUE TO UNANTICIPATED FIELD CONDITIONS. IN GENERAL, THE CONTRACTOR IS RESPONSIBLE FOR KEEPING ANY SEDIMENT FROM LEAVING THE SITE. FIBER ROLLS, SAND BAGS AND ADDITIONAL SILT FENCES SHALL BE USED BY THE CONTRACTOR ON AN AS NEEDED BASIS TO INHIBIT SILT FROM LEAVING THE SITE AND ENTERING THE STORM DRAIN SYSTEM. ALL EXISTING, TEMPORARY OR PERMANENT CATCH BASINS SHALL USE THE SEDIMENT BARRIERS SHOWN ON THIS PLAN.

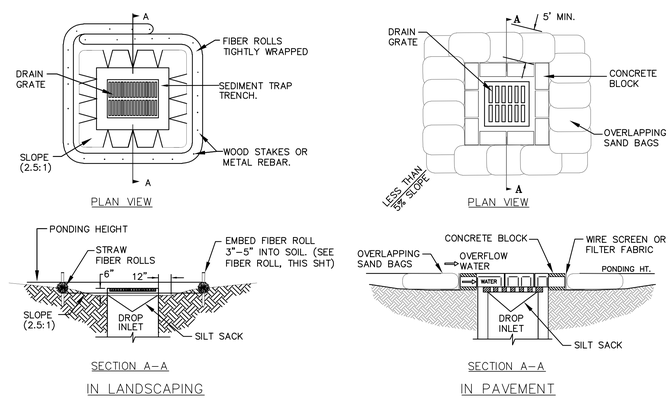

1 DRAIN INLET PROTECTION
CASQA SE-10

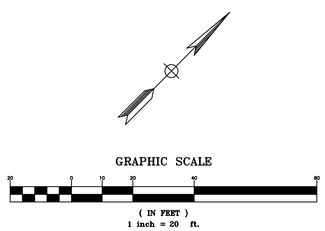

IDENTIFICATION STAMP
DIV. OF THE STATE ARCHITECT
APP: 01-119031 INC:
REVIEWED FOR
SS ☑ FLS ☑ ACS ☑
DATE: 10/22/2020

LPAS

2484 Natomas Park Drive Suite 100 Sacramento CA 95833
916 443 0335 lpasdesign.com Architecture + Design

LAS POSITAS
TEMPORARY FACULTY
VILLAGE MODULAR
OFFICES

LAS POSITAS COMMUNITY COLLEGE
LIVERMORE, CA

ARCHITECT'S STAMP APPROVAL

THIS DOCUMENT CONTAINS INFORMATION THAT IS PROPRIETARY TO LPAS, INC. AND IS FURNISHED FOR THE PURPOSES OF REVIEW, BIDDING OR CONSTRUCTION OF THE PROJECT LISTED IN THE JOB TITLE BOX ABOVE AND SHALL NOT BE USED FOR ANY OTHER PURPOSE OR RELEASED TO ANY OTHER PARTY WITHOUT THE WRITTEN CONSENT OF LPAS, INC. INFORMATION CONTAINED HEREIN IS AN INSTRUMENT OF PROFESSIONAL SERVICES AND SHALL REMAIN THE PROPERTY OF LPAS, INC. ALL RIGHTS RESERVED COPYRIGHT © 2009.

THIS DRAWING IS NOT FINAL OR TO BE USED FOR CONSTRUCTION UNTIL IT IS SIGNED BY THE ARCHITECT AND ENGINEER.

CONSULTANT

REGISTERED PROFESSIONAL ENGINEER STEVEN REYNOLDS C 77988 CIVIL STATE OF CALIFORNIA

BKF 100+ YEARS
ENGINEERS . SURVEYORS . PLANNERS
4670 WILLOW RD
SUITE 250
PLEASANTON, CA 94588
925-396-7700
925-396-7799 (FAX)

EROSION CONTROL PLAN

PROJECT NO:
DATE: 2020-08-28

SHEET NO:
C6.00

FOR CONSTRUCTION

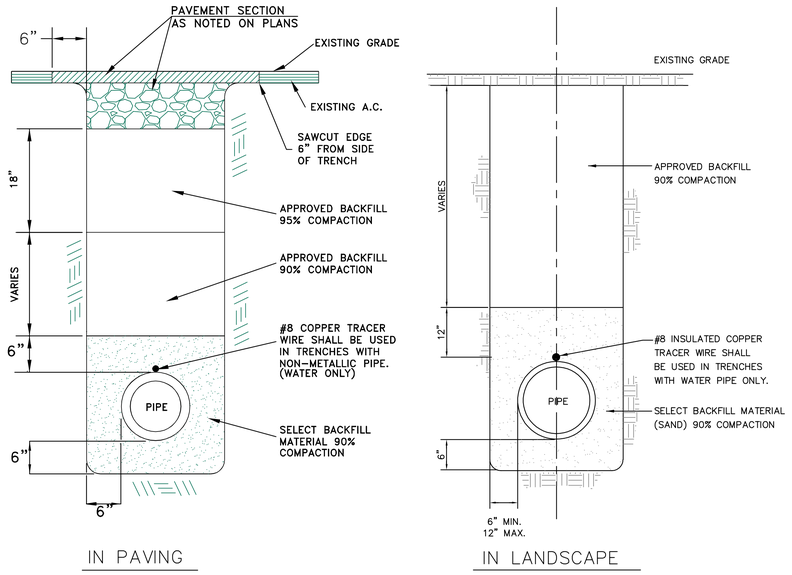

1 TRENCH BACKFILL AND RESURFACING
N.T.S.

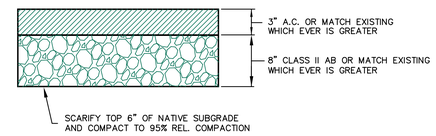

2 AC ROAD SECTION
N.T.S.

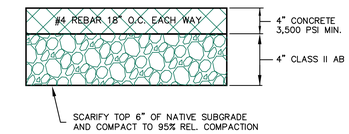

3 PEDESTRIAN CONCRETE SECTION
N.T.S.

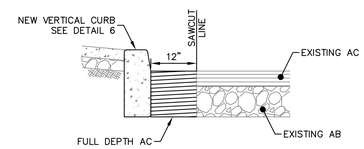

4 PAVEMENT CONFORM WITH VERTICAL CURB
NTS

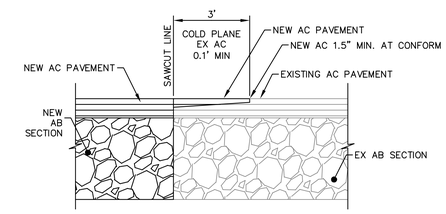

5 PAVEMENT CONFORM
NTS

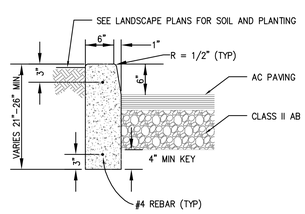

NOTES:

1. CONCRETE COMPRESSIVE STRENGTH SHALL BE 3,500 PSI
2. PROVIDE MEDIUM BROOM FINISH FOR CONCRETE

6 VERTICAL CURB
N.T.S.

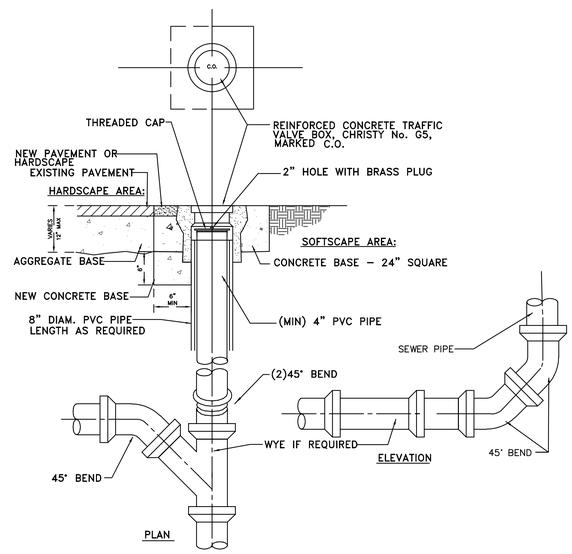

7 CLEANOUT
N.T.S.

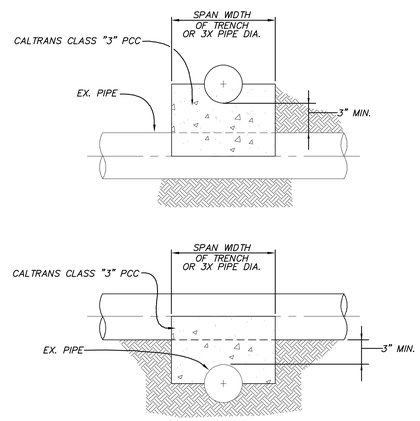

8 PIPE SADDLE
N.T.S.

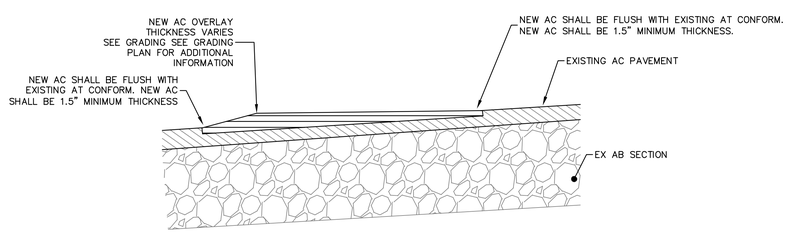

9 AC OVERLAY AND CONFORMS
N.T.S.

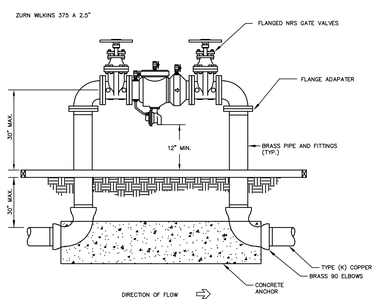

NOTES:

1. INLET AND OUTLET PIPES MAY VARY IN ELEVATION BASED ON BUILDING ENTRANCE LOCATIONS AND ELEVATIONS. CONSTRUCT THRUST BLOCKS AS REQUIRED.
2. PAINT BACKFLOW CARBON BLACK: KELLY MOORE 1245-407
3. ADD CATHODIC PROTECTION FOR ALL METALIC PIPE AND FITTINGS PER SPECIFICATIONS

10 REDUCED PRESSURE BACKFLOW PREVENTER
N.T.S.

IDENTIFICATION STAMP
DIV. OF THE STATE ARCHITECT
APP: 01-119031 INC:
REVIEWED FOR
SS ☑ FLS ☑ ACS ☑
DATE: 10/22/2020

LPAS

2484 Natomas Park Drive Suite 100 Sacramento CA 95833
916 443 0335 lpasdesign.com Architecture + Design

LAS POSITAS
TEMPORARY FACULTY
VILLAGE MODULAR
OFFICES

LAS POSITAS COMMUNITY COLLEGE
LIVERMORE, CA

ARCHITECT'S STAMP APPROVAL

THIS DOCUMENT CONTAINS INFORMATION THAT IS PROPRIETARY TO LPAS, INC. AND IS FURNISHED FOR THE PURPOSES OF REVIEW, BIDDING OR CONSTRUCTION OF THE PROJECT LISTED IN THE JOB TITLE BOX ABOVE AND SHALL NOT BE USED FOR ANY OTHER PURPOSE OR RELEASED TO ANY OTHER PARTY WITHOUT THE WRITTEN CONSENT OF LPAS, INC. INFORMATION CONTAINED HEREIN IS AN INSTRUMENT OF PROFESSIONAL SERVICES AND SHALL REMAIN THE PROPERTY OF LPAS, INC. ALL RIGHTS RESERVED COPYRIGHT © 2009.

THIS DRAWING IS NOT FINAL OR TO BE USED FOR CONSTRUCTION UNTIL IT IS SIGNED BY THE ARCHITECT AND ENGINEER.

CONSULTANT

REGISTERED PROFESSIONAL ENGINEER STEVEN REYNOLDS C 77988 CIVIL STATE OF CALIFORNIA

BKF 100+ YEARS
ENGINEERS . SURVEYORS . PLANNERS
4670 WILLOW RD
SUITE 250
PLEASANTON, CA 94588
925-396-7700
925-396-7799 (FAX)

CIVIL DETAILS

PROJECT NO:
DATE: 2020-08-28

SHEET NO:
C7.00

FOR CONSTRUCTION

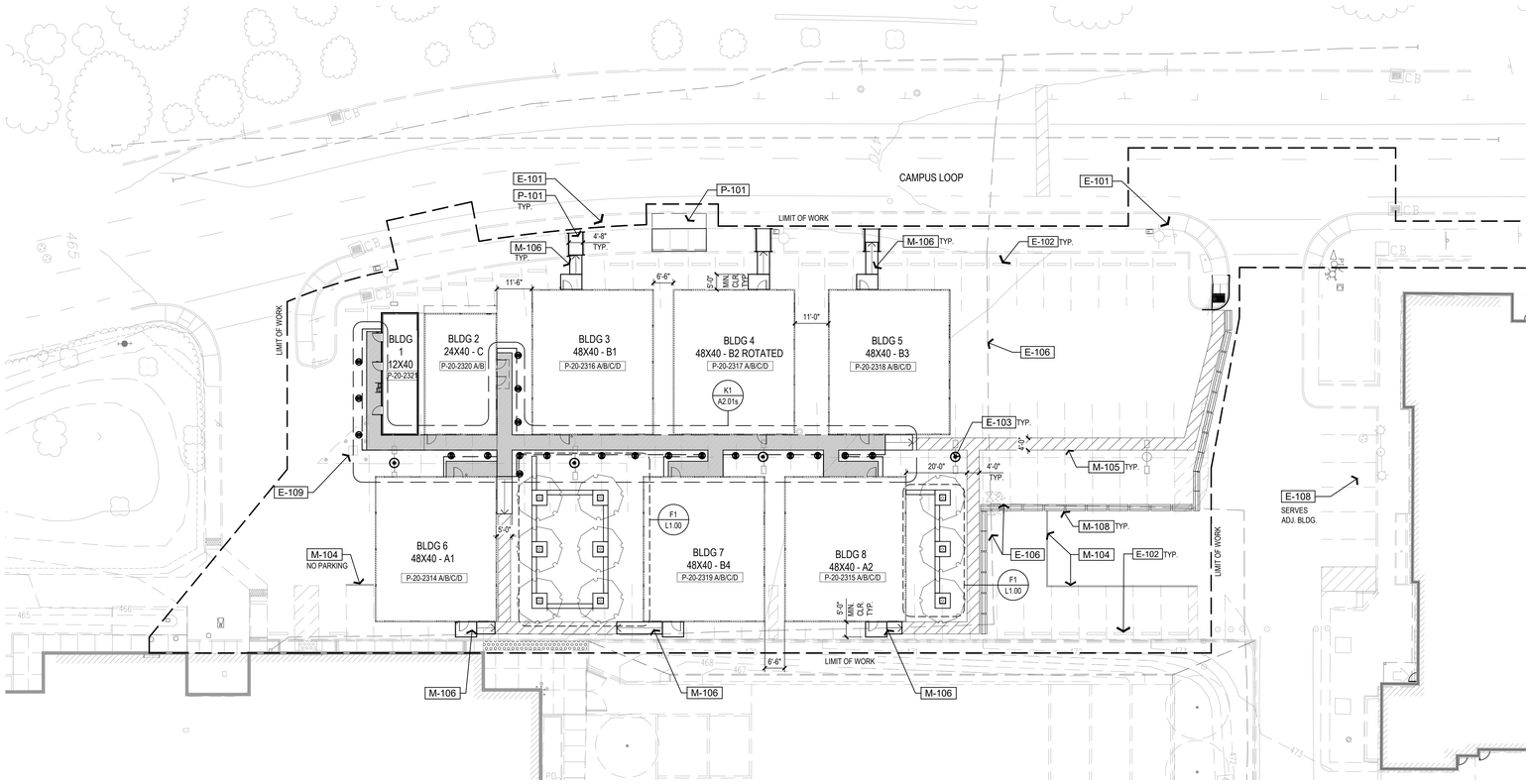

OVERALL SITE PLAN 1" = 20'-0" F1

NOTE:
ALL CONCRETE EDGES TO HAVE TOOLED ½" RADIUS.

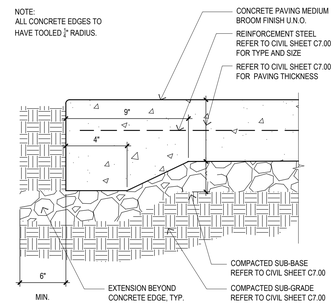

CONCRETE PAVING 3" = 1'-0" H7

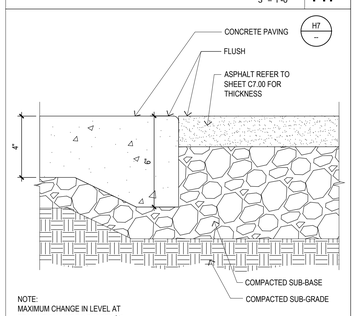

NOTE:
MAXIMUM CHANGE IN LEVEL AT TRANSITION NOT TO EXCEED ¼"

FLUSH TRANSITION 863-0005_A1-00 SCALE: 3" = 1'-0" K7

REFERENCE NOTES SCHEDULE

SYMBOL	EXISTING IMPROVEMENTS DESCRIPTION	DETAIL
E-101	CONCRETE PAVING	
E-102	PARKING BUMPER TO REMAIN	
E-103	PARKING LOT LIGHT AND BASE TO REMAIN	
E-104	PARKING LOT STRIPING TO REMAIN	
E-105	AC PAVING TO REMAIN	
E-106	GAS LINE TO REMAIN	
E-107	UTILITIES TO REMAIN	
E-108	PARKING AREA TO REMAIN, NOT IN CONTRACT	
E-109	PARKING PERMIT DISPENSER TO REMAIN	

SYMBOL	MISCELLANEOUS MATERIALS DESCRIPTION	DETAIL
M-101	SHADE TREES IN 24" BOX CONTAINERS	H4 / L1.00
M-103	NOT USED	
M-104	4" WIDE STRIPING, COLOR WHITE	K5 / A0.30s
M-105	4" WIDE STRIPING, COLOR BLUE	K5 / A0.30s
M-106	RAMP AND LANDING BY CLASS LEASING. SEE 1/SR1	
M-107	WOOD BENCH	K4 / L1.00
M-108	TRAFFIC BARRIER	

SYMBOL	PAVING DESCRIPTION	DETAIL
P-101	CONCRETE PAVING	H7 / A1.00s

REFERENCE NOTES SCHEDULE 1" = 20'-0" K4

1. CONTRACTOR SHALL INFORM ARCHITECT OF ANY DISCREPANCIES BETWEEN THE PLANS AND FIELD CONDITIONS. THE WRITTEN DIMENSION SHALL SUPERSEDE THE DRAWN DIMENSION. ALL FIELD CHANGES MUST BE APPROVED BY THE ARCHITECT PRIOR TO INSTALLATION.

2. ALL DIMENSIONS ARE TO FACE OF CURB AND FACE OF WALL UNLESS OTHERWISE NOTED. ALL DIMENSIONS ARE AT 90 DEGREES OR 45 DEGREES UNLESS OTHERWISE NOTED.

3. SLEEVING SHALL BE PROVIDED AND COORDINATED BY CONTRACTOR DURING CONCRETE WORK AND WALL CONSTRUCTION. ALL SLEEVES SHALL BE SCHEDULE 40 PVC, SIZE AS NOTED. REFER TO CIVIL AND IRRIGATION PLANS FOR LOCATIONS OF SLEEVES.

4. PROVIDE A CROSS SLOPE ON ALL CONCRETE WALKS AND PAVING OF 2% MAXIMUM, 1% MINIMUM TO PROVIDE POSITIVE DRAINAGE. REFER TO CIVIL PLANS FOR MORE INFORMATION.

5. FINISH GRADE SHALL HAVE A MINIMUM OF 2% SLOPE AWAY FROM ALL WALLS AND STRUCTURES UNLESS OTHERWISE SPECIFIED. REFER TO CIVIL PLANS FOR MORE INFORMATION.

6. CONTRACTOR SHALL VERIFY LOCATION OF ALL EXISTING UNDERGROUND UTILITIES AND STRUCTURES PRIOR TO ANY EXCAVATION. CONTACT COMMON GROUND ALLIANCE (C.G.A.) @ 811. CALL AT LEAST 48 HOURS PRIOR TO PERFORMING ANY EXCAVATION. CONTRACTOR SHALL REPAIR ANY DAMAGE TO UTILITIES CAUSED BY HIS WORK AT NO ADDITIONAL COST TO THE OWNER.

7. WHERE CONTRACTOR'S WORK INTERFACES WITH EXISTING IMPROVEMENTS, CARE SHALL BE TAKEN TO AVOID DAMAGING EXISTING LANDSCAPING, IRRIGATION AND UTILITIES, ANY DAMAGE TO EXISTING CONDITIONS SHALL BE REPAIRED WITHIN 48 HOURS AT NO ADDITIONAL COST TO THE OWNER.

8. CONTRACTOR IS RESPONSIBLE FOR ADJUSTING THE ELEVATIONS OF ALL NEW AND EXISTING UTILITY VAULTS, BOXES, MANHOLES, AND OTHER STRUCTURES TO NEW FINISH GRADE.

9. REFER TO SPECIFICATIONS FOR MORE INFORMATION.

10. TRAFFIC BARRIER TO BE EITHER WATER-FILLED PLASTIC BARRIER OR CONCRETE BARRIER. ALL BARRIERS SHALL BE THE SAME MATERIAL, COLOR AND FINISH.

SITE NOTES K1

IDENTIFICATION STAMP
DIV. OF THE STATE ARCHITECT
APP: 01-119031 INC:
REVIEWED FOR
SS ☑ FLS ☑ ACS ☑
DATE: 10/22/2020

LPAS

2484 Natomas Park Drive Suite 100 Sacramento CA 95833
916 443 0335 lpasdesign.com Architecture + Design

LAS POSITAS
TEMPORARY FACULTY
VILLAGE MODULAR
OFFICES

LAS POSITAS COMMUNITY COLLEGE
LIVERMORE, CA

LICENSED ARCHITECT
PURNIE A. OWYANG
C-18-26
LICENSE NO.
REGISTRATION
DATE
STATE OF CALIFORNIA

ARCHITECT'S STAMP APPROVAL

THIS DOCUMENT CONTAINS INFORMATION THAT IS PROPRIETARY TO LPAS, INC. AND IS FURNISHED FOR THE PURPOSES OF REVIEW, BIDDING OR CONSTRUCTION OF THE PROJECT LISTED IN THE JOB TITLE BOX ABOVE AND SHALL NOT BE USED FOR ANY OTHER PURPOSE OR RELEASED TO ANY OTHER PARTY WITHOUT THE WRITTEN CONSENT OF LPAS, INC. INFORMATION CONTAINED HEREIN IS AN INSTRUMENT OF PROFESSIONAL SERVICES AND SHALL REMAIN THE PROPERTY OF LPAS, INC. ALL RIGHTS RESERVED COPYRIGHT © 2009.

THIS DRAWING IS NOT FINAL OR TO BE USED FOR CONSTRUCTION UNTIL IT IS SIGNED BY THE ARCHITECT AND ENGINEER.

CONSULTANT

OVERALL SITE PLAN

PROJECT NO:
DATE: 2020-08-28

SHEET NO:
A1.00s

FOR CONSTRUCTION

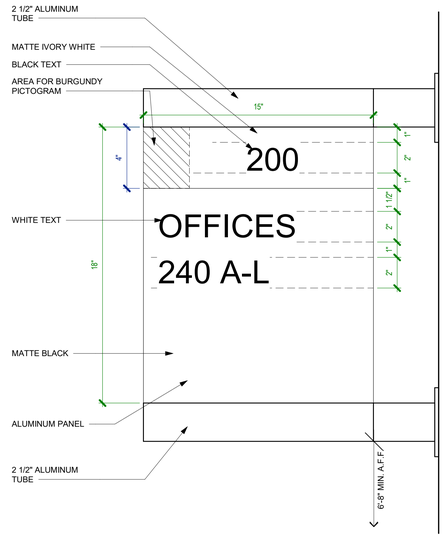

BUILDING BLADE SIGNAGE 3" = 1'-0" | D10

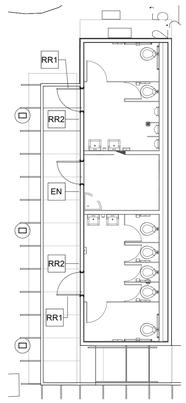

SIGNAGE PLAN - BLDG 1 RESTROOM 1/8" = 1'-0" | D4

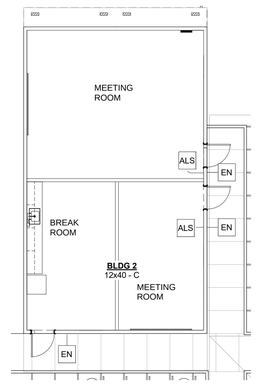

FLOOR PLAN 1/8" = 1'-0" | D1

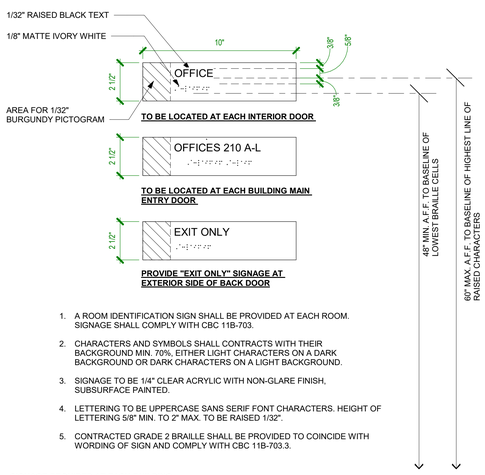

1. A ROOM IDENTIFICATION SIGN SHALL BE PROVIDED AT EACH ROOM. SIGNAGE SHALL COMPLY WITH CBC 11B-703.
2. CHARACTERS AND SYMBOLS SHALL CONTRACTS WITH THEIR BACKGROUND MIN. 70%, EITHER LIGHT CHARACTERS ON A DARK BACKGROUND OR DARK CHARACTERS ON A LIGHT BACKGROUND.
3. SIGNAGE TO BE 1/4" CLEAR ACRYLIC WITH NON-GLARE FINISH, SUBSURFACE PAINTED.
4. LETTERING TO BE UPPERCASE SANS SERIF FONT CHARACTERS. HEIGHT OF LETTERING 5/8" MIN. TO 2" MAX. TO BE RAISED 1/32".
5. CONTRACTED GRADE 2 BRAILLE SHALL BE PROVIDED TO COINCIDE WITH WORDING OF SIGN AND COMPLY WITH CBC 11B-703.3.

SIGNAGE REQUIRED AT EACH BUILDING:

BUILDING 1:
PROVIDE 3 BUILDING ENTRY SIGNS AT EXTERIOR DOOR.
PROVIDE 3 EXIT SIGNS AT INTERIOR SIDE OF EXTERIOR DOORS
BUILDING 2:
PROVIDE 3 BUILDING ENTRY SIGNS AT EXTERIOR DOOR.
PROVIDE 3 EXIT SIGNS AT INTERIOR SIDE OF EXTERIOR DOORS
PROVIDE 2 ASSISTED LISTENING SIGNAGE, ONE FOR EACH MEETING ROOMS
BUILDING 3,4,5 & 7:
PROVIDE 1 BUILDING ENTRY SIGN AT EXTERIOR DOOR
PROVIDE 1 BUILDING "EXIT ONLY" SIGN AT EXTERIOR DOOR
PROVIDE 2 EXIT SIGNS AT INTERIOR SIDE OF EXTERIOR DOORS
PROVIDE 12 INTERIOR OFFICE SIGNS
BUILDING 6 & 8:
PROVIDE 1 BUILDING ENTRY SIGN AT EXTERIOR DOOR
PROVIDE 1 BUILDING "EXIT ONLY" SIGN AT EXTERIOR DOOR
PROVIDE 2 EXIT SIGNS AT INTERIOR SIDE OF EXTERIOR DOORS
PROVIDE 11 INTERIOR OFFICE SIGNS

SIGN - ROOM IDENTIFICATION @OFFICE/BLDG ENTRY 3" = 1'-0" | H10

SIGNAGE LOCATIONS LEGEND

EN	ENTRY DOOR SIGNAGE. PLACE AT EVERY MAIN BUILDING ENTRY DOOR. SEE DETAIL	H10 A1.11s
BL	BUILDING BLADE SIGNAGE. MOUNTED ABOVE 8'- 8" AFF. SEE DETAIL	D10 A1.11s AND K1 A2.01s FOR LOCATIONS
EX1	BUILDING "EXIT ONLY" SIGNS. PLACE AT EXTERIOR SIDE OF EXTERIOR BACK DOOR. SEE DETAIL	H10 A1.11s
EX2	REQUIRED EXIT DOOR SIGNAGE. SEE DETAILS	K8 A1.11s, K6 A1.11s
ALS	ASSISTED LISTENING SIGNAGE. SEE DETAILS	K4 A1.11s
INT	INTERIOR ROOM SIGN. SEE DETAIL	H10 A1.11s
RR1	RESTROOM DOOR SIGN. SEE **3/A0.2** 12' X 40' MODULAR DRAWING PROVIDED AND INSTALLED BY CLASS LEASING	
RR2	RESTROOM WALL SIGN.	K2 A1.11s

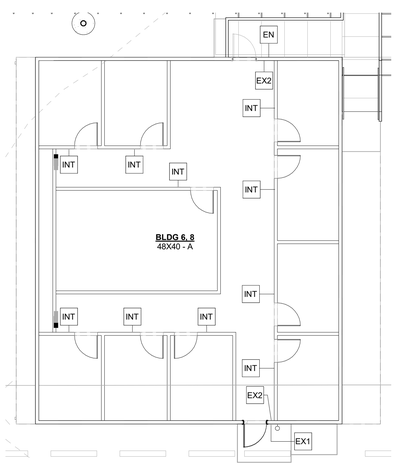

SIGNAGE PLAN BLDG A 48' X 40' OFFICE BLDG 1/8" = 1'-0" | H4

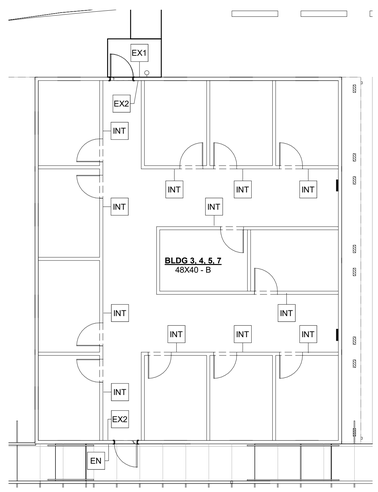

SIGNAGE PLAN BLDG B - 48' X 40' OFFICE BLDG 1/8" = 1'-0" | H1

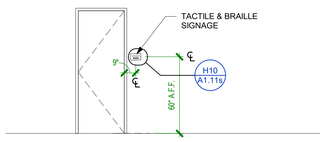

ROOM ID SIGNAGE LOCATION 1/4" = 1'-0" | K10

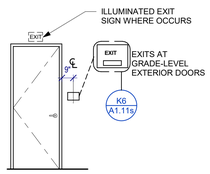

REQUIRED EXIT DOOR SIGNAGE 1/4" = 1'-0" | K8

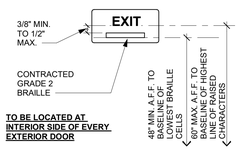

TO BE LOCATED AT INTERIOR SIDE OF EVERY EXTERIOR DOOR

1. TACTILE EXIT SIGNAGE SHALL BE INSTALLED WHERE REQUIRED BY CBC 11B-703.4. SIGNAGE SHALL COMPLY WITH CBC 11B-703.
2. CHARACTERS AND SYMBOLS SHALL CONTRACTS WITH THEIR BACKGROUND MIN. 70%, EITHER LIGHT CHARACTERS ON A DARK BACKGROUND OR DARK CHARACTERS ON A LIGHT BACKGROUND.
3. SIGNAGE TO BE 1/4" CLEAR ACRYLIC WITH NON-GLARE FINISH, SUBSURFACE PAINTED.
4. LETTERING TO BE UPPERCASE SANS SERIF FONT CHARACTERS. HEIGHT OF LETTERING 5/8" MIN. TO 2" MAX. TO BE RAISED 1/32".
5. CONTRACTED GRADE 2 BRAILLE SHALL BE PROVIDED TO COINCIDE WITH WORDING OF SIGN AND COMPLY WITH CBC 11B-703.3.

TACTILE EXIT SIGN 1" = 1'-0" | K6

1. 1. ASSISTIVE LISTENING SYSTEM SIGN SHALL BE PROVIDED AT EACH CONFERENCE ROOM STATING "ASSISTIVE LISTENING SYSTEM AVAILABLE AT ____". LOCATION TO BE PROVIDED BY OWNER. SIGNAGE SHALL COMPLY WITH CBC 11B-703.5 AND 11B-703.7.2.4
2. CHARACTERS AND SYMBOLS SHALL CONTRAST WITH THEIR BACKGROUND MIN. 70%, EITHER LIGHT CHARACTERS ON A DARK BACKGROUND OR DARK CHARACTERS ON A LIGHT BACKGROUND.
3. SIGNAGE TO BE 1/4" CLEAR ACRYLIC WITH NON-GLARE FINISH, SUBSURFACE PAINTED.
4. LETTERING TO BE UPPERCASE SANS SERIF FONT CHARACTERS. HEIGHT OF LETTERING TO BE 5/8" MIN. TO 2" MAX.

ASSISTED LISTENING SIGNAGE 1" = 1'-0" | K4

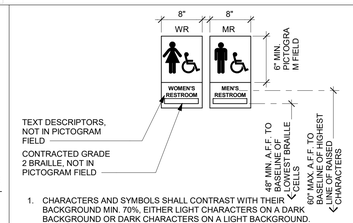

1. CHARACTERS AND SYMBOLS SHALL CONTRAST WITH THEIR BACKGROUND MIN. 70%, EITHER LIGHT CHARACTERS ON A DARK BACKGROUND OR DARK CHARACTERS ON A LIGHT BACKGROUND.
2. SIGNAGE TO BE 3/8" CLEAR ACRYLIC WITH A NON-GLARE FINISH BACKPAINT TO MATCH COLOR SELECTED BY ARCHITECT, U.O.N.
3. LETTERING TO BE UPPERCASE SANS SERIF FONT CHARACTERS. HEIGHT OF LETTERING 5/8" MIN. TO 2" MAX. COLOR SHALL BE SELECTED BY ARCHITECT, U.O.N. 70% MIN CONTRAST.
4. CONTRACTED GRADE 2 BRAILLE SHALL BE PROVIDED TO COINCIDE WITH WORDING OF SIGN AND COMPLY WITH CBC 11B-703.3.

SIGN - RESTROOM WALL 1" = 1'-0" | K2

IDENTIFICATION STAMP
DIV. OF THE STATE ARCHITECT
APP: 01-119031 INC:
REVIEWED FOR
SS ☑ FLS ☑ ACS ☑
DATE: 10/22/2020

LPAS

2484 Natomas Park Drive Suite 100 Sacramento CA 95833
916 443 0335 lpasdesign.com **Architecture + Design**

LAS POSITAS
TEMPORARY FACULTY
VILLAGE MODULAR
OFFICES

LAS POSITAS COMMUNITY COLEGE
LIVERMORE, CA

NO.	ISSUE	DATE

ARCHITECT'S STAMP APPROVAL

THIS DOCUMENT CONTAINS INFORMATION THAT IS PROPRIETARY TO LPAS, INC. AND IS FURNISHED FOR THE PURPOSES OF REVIEW, BIDDING OR CONSTRUCTION OF THE PROJECT LISTED IN THE JOB TITLE BOX ABOVE AND SHALL NOT BE USED FOR ANY OTHER PURPOSE OR RELEASED TO ANY OTHER PARTY WITHOUT THE WRITTEN CONSENT OF LPAS, INC. INFORMATION CONTAINED HEREIN IS AN INSTRUMENT OF PROFESSIONAL SERVICE AND SHALL REMAIN THE PROPERTY OF LPAS, INC. ALL RIGHTS RESERVED COPYRIGHT © 2020.

THIS DRAWING IS NOT FINAL OR TO BE USED FOR CONSTRUCTION UNTIL IT IS SIGNED BY THE ARCHITECT AND ENGINEER.

CONSULTANT

SIGNAGE PLAN AND DETAILS

PROJECT NO: 863-0005
DATE: 08-28-2020

SHEET NO:

A1.11s

FOR CONSTRUCTION

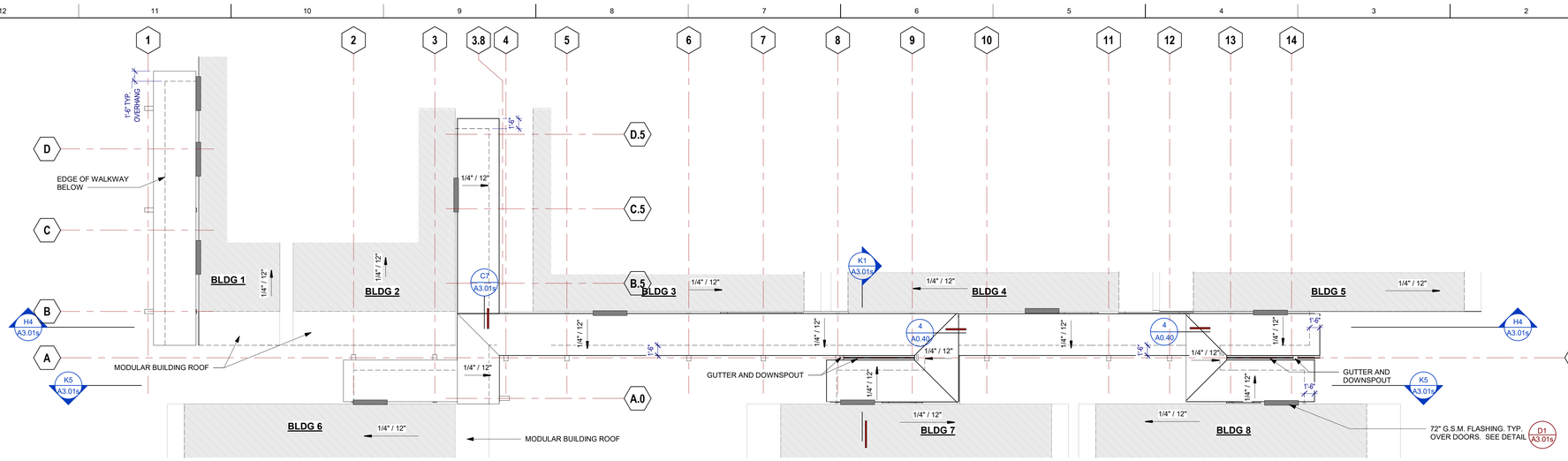

ROOF PLAN 1/8" = 1'-0" C1

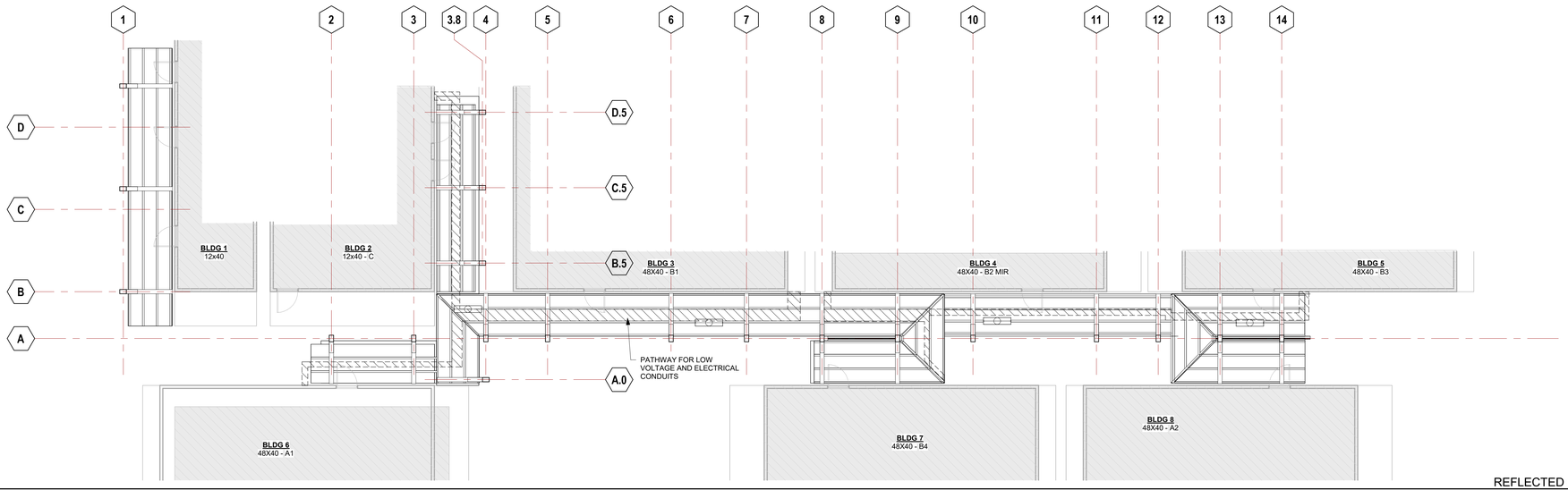

REFLECTED CEILING PLAN 1/8" = 1'-0" F1

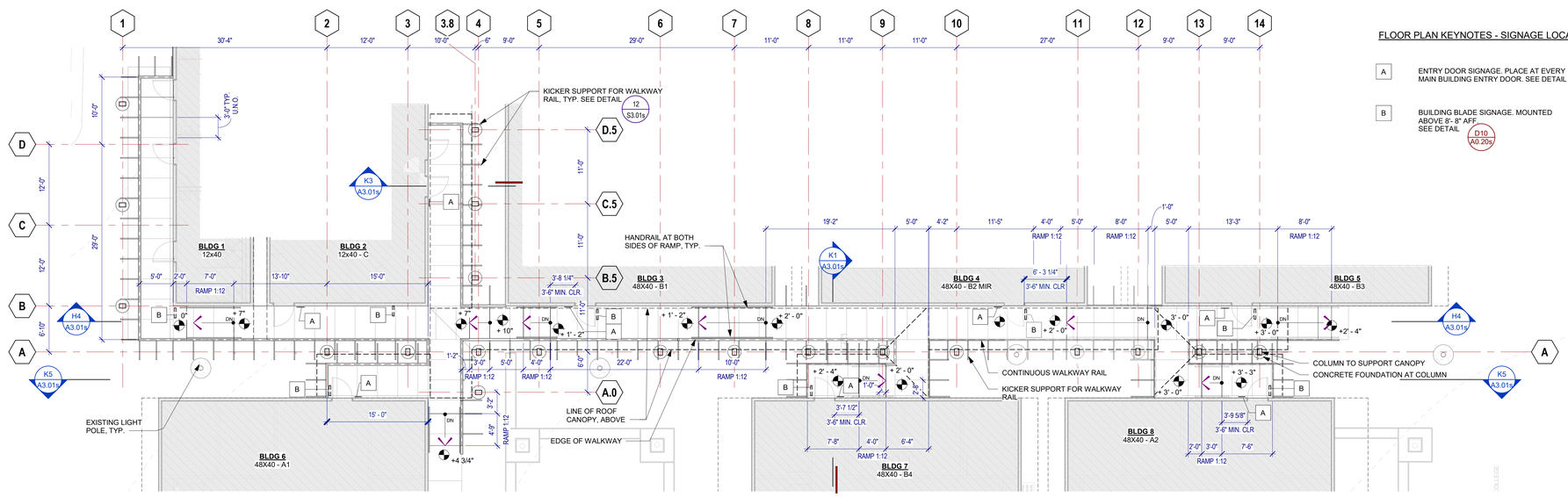

FLOOR PLAN KEYNOTES - SIGNAGE LOCATIONS

A — ENTRY DOOR SIGNAGE. PLACE AT EVERY MAIN BUILDING ENTRY DOOR. SEE DETAIL H10 A0.20s

B — BUILDING BLADE SIGNAGE. MOUNTED ABOVE 8'- 8" AFF. SEE DETAIL D10 A0.20s

FLOOR PLAN 1/8" = 1'-0" K1

IDENTIFICATION STAMP
DIV. OF THE STATE ARCHITECT
APP: 01-119031 INC:
REVIEWED FOR
SS ☑ FLS ☑ ACS ☑
DATE: 10/22/2020

LPAS

2484 Natomas Park Drive Suite 100 Sacramento CA 95833
916 443 0335 lpasdesign.com **Architecture + Design**

LAS POSITAS TEMPORARY FACULTY VILLAGE MODULAR OFFICES

LAS POSITAS COMMUNITY COLEGE
LIVERMORE, CA

NO.	ISSUE	DATE

LICENSED ARCHITECT
PURNIE A. OWYANG
C-18758
REGISTRATION EXPIRES 12-31-20
RENEWAL DATE
STATE OF CALIFORNIA

ARCHITECT'S STAMP APPROVAL

THIS DOCUMENT CONTAINS INFORMATION THAT IS PROPRIETARY TO LPAS, INC. AND IS FURNISHED FOR THE PURPOSES OF REVIEW, BIDDING OR CONSTRUCTION OF THE PROJECT LISTED IN THE JOB TITLE BOX ABOVE AND SHALL NOT BE USED FOR ANY OTHER PURPOSE OR RELEASED TO ANY OTHER PARTY WITHOUT THE WRITTEN CONSENT OF LPAS, INC. INFORMATION CONTAINED HEREIN IS AN INSTRUMENT OF PROFESSIONAL SERVICES AND SHALL REMAIN THE PROPERTY OF LPAS, INC. ALL RIGHTS RESERVED COPYRIGHT © 2006.

THIS DRAWING IS NOT FINAL OR TO BE USED FOR CONSTRUCTION UNTIL IT IS SIGNED BY THE ARCHITECT AND ENGINEER.

CONSULTANT

OVERALL PLANS

PROJECT NO: 863-0005
DATE: 08-28-2020

SHEET NO:

A2.01s

FOR CONSTRUCTION

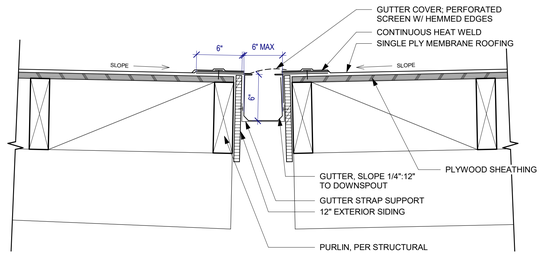

ALL WOOD AND EXTERIOR SIDING TO BE PAINTED.

DETAIL @ GUTTER 1 1/2" = 1'-0" C10

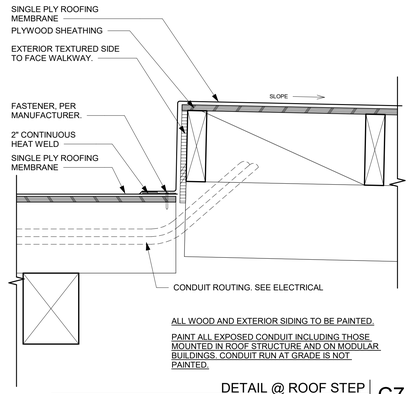

ALL WOOD AND EXTERIOR SIDING TO BE PAINTED.

PAINT ALL EXPOSED CONDUIT INCLUDING THOSE MOUNTED IN ROOF STRUCTURE AND ON MODULAR BUILDINGS. CONDUIT RUN AT GRADE IS NOT PAINTED.

DETAIL @ ROOF STEP 1 1/2" = 1'-0" C7

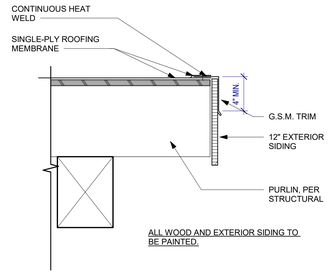

ALL WOOD AND EXTERIOR SIDING TO BE PAINTED.

DETAIL @ ROOF RAKE & LOW EAVE - TYP. 1 1/2" = 1'-0" C4

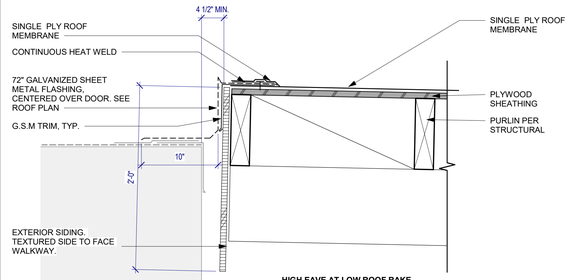

HIGH EAVE AT LOW ROOF RAKE

ALL WOOD AND EXTERIOR SIDING TO BE PAINTED.

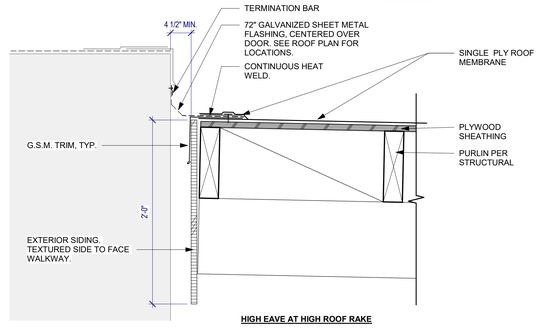

HIGH EAVE AT HIGH ROOF RAKE

DETAIL @ HIGH EAVE 1 1/2" = 1'-0" D1

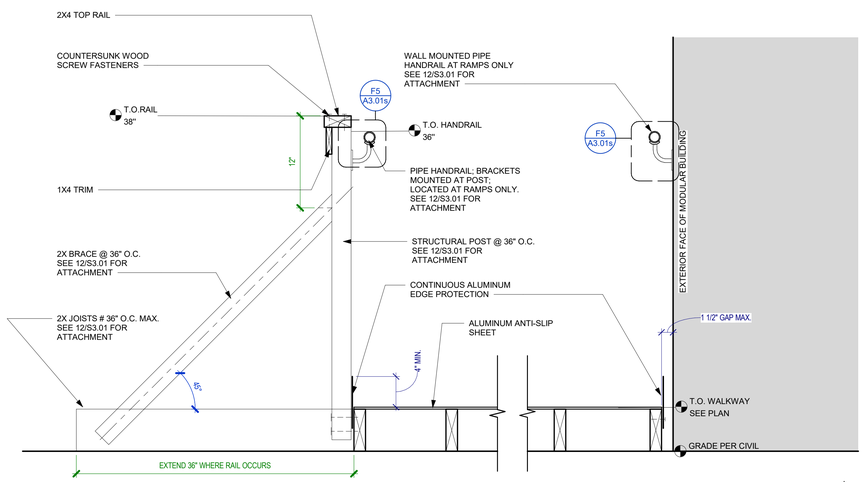

WALKWAY RAIL DETAIL 1 1/2" = 1'-0" F8

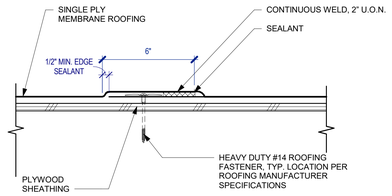

SECTION AT IN-LAP FASTENING 3" = 1'-0" D4

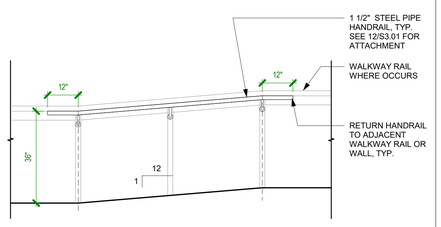

HANDRAIL DETAIL 1/2" = 1'-0" F5

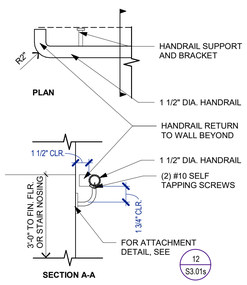

HANDRAIL ATTACHMENT & END RETURN 1 1/2" = 1'-0" F1

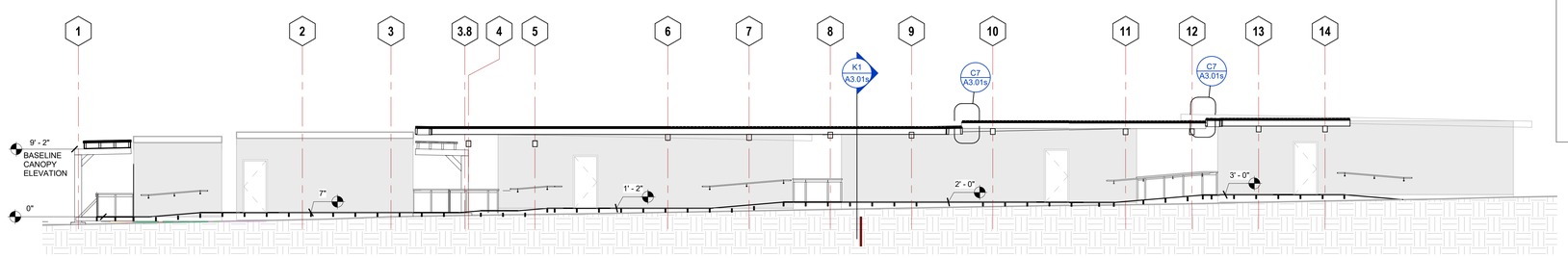

SECTION A-A 1/8" = 1'-0" H4

DETAIL - ROOF VALLEY - TYP. 1 1/2" = 1'-0" G1

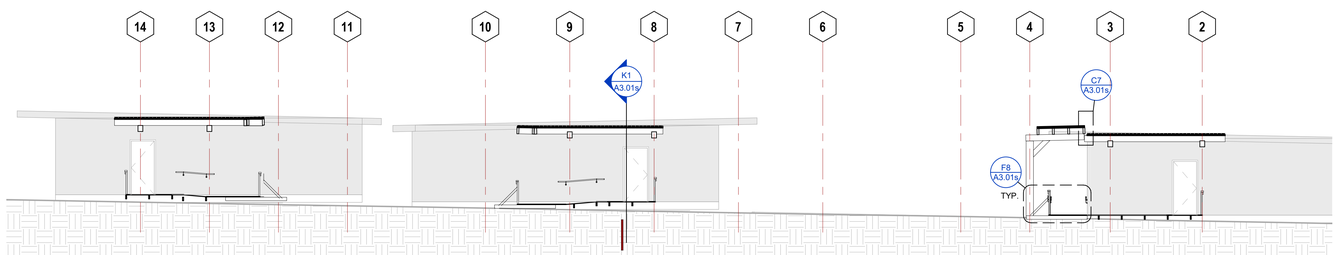

SECTION B-B 1/8" = 1'-0" K5

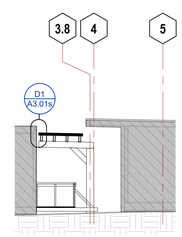

SECTION D-D 1/8" = 1'-0" K3

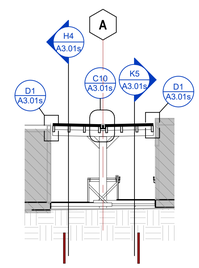

SECTION C-C 1/8" = 1'-0" K1

IDENTIFICATION STAMP
DIV. OF THE STATE ARCHITECT
APP: 01-119031 INC:
REVIEWED FOR
SS ☑ FLS ☑ ACS ☑
DATE: 10/22/2020

LPAS

2484 Natomas Park Drive Suite 100 Sacramento CA 95833
916 443 0335 lpasdesign.com **Architecture + Design**

LAS POSITAS TEMPORARY FACULTY VILLAGE MODULAR OFFICES

LAS POSITAS COMMUNITY COLEGE
LIVERMORE, CA

NO.	ISSUE	DATE

LICENSED ARCHITECT
JEFFREY R. TOWANG
STATE OF CALIFORNIA

ARCHITECT'S STAMP APPROVAL

THIS DOCUMENT CONTAINS INFORMATION THAT IS PROPRIETARY TO LPAS, INC. AND IS FURNISHED FOR THE PURPOSES OF REVIEW, BIDDING OR CONSTRUCTION OF THE PROJECT LISTED IN THE JOB TITLE BOX ABOVE AND SHALL NOT BE USED FOR ANY OTHER PURPOSE OR RELEASED TO ANY OTHER PARTY WITHOUT THE WRITTEN CONSENT OF LPAS, INC. INFORMATION CONTAINED HEREIN IS AN INSTRUMENT OF PROFESSIONAL SERVICES AND SHALL REMAIN THE PROPERTY OF LPAS, INC. ALL RIGHTS RESERVED COPYRIGHT © 2009.

THIS DRAWING IS NOT FINAL OR TO BE USED FOR CONSTRUCTION UNTIL IT IS SIGNED BY THE ARCHITECT AND ENGINEER.

CONSULTANT

ENLARGED SECTIONS & DETAILS

PROJECT NO: 863-0005
DATE: 08-28-2020

SHEET NO:

A3.01s

FOR CONSTRUCTION

LAS POSITAS COLLEGE TEMPORARY FACULTY VILLAGE

STRUCTURAL DRAWING LIST

SHEET LIST

SHEET NO	SHEET NAME
S1.00S	COVER SHEET & DRAWING LIST & ABBREVIATIONS
S1.01S	CONCRETE & STEEL DETAILS
S2.01S	PLANS AND SECTIONS
S3.00S	TYPICAL WOOD DETAILS AND SCHEDULES
S3.01S	TYPICAL WOOD DETAILS

GR GENERAL REQUIREMENTS

GR-1 AS USED IN THESE GENERAL NOTES:
"DRAWINGS" MEANS THE LATEST STRUCTURAL DESIGN DRAWINGS, UON.
"SPECIFICATIONS" MEANS THE LATEST PROJECT SPECIFICATIONS, UON.
"CONTRACT DOCUMENTS" IS DEFINED AS THE DESIGN DRAWINGS AND THE SPECIFICATIONS
"SER" IS DEFINED AS THE STRUCTURAL ENGINEER OF RECORD FOR THE STRUCTURE IN ITS FINAL CONDITION.
"DESIGN PROFESSIONALS" IS DEFINED AS THE OWNER'S ARCHITECT AND SER.
"MEP" INCLUDES, BUT IS NOT LIMITED TO MECHANICAL, ELECTRICAL, PLUMBING, FIRE PROTECTION.
"CONTRACTOR" IS DEFINED TO INCLUDE ANY OF THE FOLLOWING: GENERAL CONTRACTOR AND THEIR SUBCONTRACTORS, CONSTRUCTION MANAGER AND THEIR SUBCONTRACTORS, STRUCTURAL STEEL FABRICATOR OR STRUCTURAL STEEL ERECTOR.
"BASE BUILDING STRUCTURE" IS DEFINED AS THE STRUCTURAL FRAME DESIGNED BY THORNTON TOMASETTI.
"STRUCTURE IN ITS FINAL CONDITION" MEANS ALL STRUCTURAL ELEMENTS SHOWN ON THE STRUCTURAL CONTRACT DOCUMENTS ARE INSTALLED AND COMPLETELY CONNECTED AND INSPECTED WITH NO OUTSTANDING NON-COMPLIANCE ISSUES.
"DELEGATED DESIGN" MEANS A SCOPE OF WORK THAT MEETS PERFORMANCE CRITERIA ESTABLISHED IN THE CONTRACT DOCUMENTS AND IS TO BE COMPLETED BY THE CONTRACTOR'S LICENSED ENGINEER.
"SERVICE LEVEL" LOADS ARE DEFINED AS NOMINAL OR UNFACTORED LOADS TO BE COMBINED USING ALLOWABLE STRESS LOAD COMBINATIONS
"STRENGTH LEVEL" LOADS ARE DEFINED AS FACTORED LOADS TO BE COMBINED USING STRENGTH DESIGN LOAD COMBINATIONS

GR-2 THE CONTRACTOR IS RESPONSIBLE FOR COORDINATION OF THE STRUCTURAL WORK WITH THE ARCHITECTURAL, CIVIL, MEP CONTRACT DOCUMENTS, AS WELL AS ANY OTHER APPLICABLE TRADES.

GR-3 THE CONTRACTOR IS RESPONSIBLE FOR THE STABILITY OF THE STRUCTURE UNTIL THE CONSTRUCTION OF THE STRUCTURE REACHES ITS FINAL CONDITION.

GR-4 THE CONTRACTOR IS SOLELY RESPONSIBLE FOR THE DESIGN, INSTALLATION, AND REMOVAL OF TEMPORARY BRACING AND CONSTRUCTION SUPPORTS, FOR NEW AND EXISTING STRUCTURES, AS NECESSARY TO COMPLETE THE PROJECT. NO PORTION OF THE PROJECT WHILE UNDER CONSTRUCTION IS INTENDED TO BE STABLE IN THE ABSENCE OF THE CONTRACTOR'S TEMPORARY SUPPORTS AND BRACES. CONTRACTOR SHALL RETAIN A PROFESSIONAL/STRUCTURAL ENGINEER LICENSED CALIFORNIA TO DESIGN TEMPORARY BRACING AND CONSTRUCTION SUPPORTS.

GR-5 LATERAL LOAD RESISTANCE AND STABILITY OF THE STRUCTURE IN ITS FINAL CONDITION IS PROVIDED BY CANTILEVER COLUMN AND LATERAL STABILITY OF OTHER ELEMENTS IS PROVIDED THROUGH ROOF DECK.

GR-6 THE SPECIFICATIONS ARE AN INTEGRAL PART OF THE CONTRACT DOCUMENTS AND SHALL BE USED IN CONJUNCTION WITH THE STRUCTURAL DRAWINGS.

GR-7 THE CONTRACTOR SHALL VERIFY ALL EXISTING DIMENSIONS AND CONDITIONS AND COORDINATE WITH THE STRUCTURAL DRAWINGS, ARCHITECTURAL DRAWINGS, DRAWINGS FROM OTHER CONSULTANTS, PROJECT SHOP DRAWINGS AND FIELD CONDITIONS.

GR-8 IN CASES OF CONFLICT BETWEEN DRAWINGS AND/OR SPECIFICATIONS AND OTHER DISCIPLINES OR EXISTING CONDITIONS, CONTRACTOR SHALL NOTIFY THE DESIGN PROFESSIONALS AND OBTAIN CLARIFICATION PRIOR TO BIDDING AND PROCEEDING WITH WORK.

GR-9 APPLY DETAILS, SECTIONS, AND NOTES ON THE DRAWINGS WHERE CONDITIONS ARE SIMILAR TO THOSE INDICATED BY DETAIL, DETAIL TITLE OR NOTE.

GR-10 ONLY USE DIMENSIONS INDICATED ON THE DRAWINGS. DO NOT SCALE DRAWINGS.

GR-11 ASSUME EQUAL SPACING BETWEEN ESTABLISHED DIMENSIONS, IF NOT INDICATED ON DRAWINGS.

GR-12 CENTERLINES OF COLUMNS COINCIDE WITH GRID LINE INTERSECTIONS, UON.

GR-14 CENTERLINES OF FRAMING MEMBERS COINCIDE WITH COLUMN CENTERLINES, UON.

GR-15 THE CONTRACTOR SHALL PROTECT EXISTING FACILITIES, STRUCTURES AND UTILITIES FROM DAMAGE.

GR-16 THE CONTRACTOR SHALL VERIFY THAT CONSTRUCTION LOADS DO NOT EXCEED THE CAPACITY OF THE STRUCTURE AT THE TIME THE LOAD IS APPLIED.

GR-18 THE CONTRACTOR SHALL VERIFY ALL OPENING SIZES AND LOCATIONS WITH OTHER DISCIPLINES. THE DRAWINGS DO NOT SHOW ALL OPENINGS REQUIRED. ADDITIONAL OPENINGS, BLOCKOUTS AND SLEEVES MAY BE REQUIRED BY OTHER DISCIPLINES AND SHALL BE CONSTRUCTED USING THE TYPICAL DETAILS AND/OR THE CRITERIA INDICATED ON THE DRAWINGS. OPENINGS REQUIRED BUT NOT SHOWN ON THE STRUCTURAL DRAWINGS MUST BE APPROVED BY THE SER.

GR-19 ELEVATIONS INDICATED ON STRUCTURAL DRAWINGS ARE BASED ON A PROJECT DATUM INDICATED ON THE ARCHITECTURAL/CIVIL DRAWINGS.

CD CODES AND DESIGN CRITERIA

CD-1 PERFORM ALL CONSTRUCTION IN CONFORMANCE WITH THE BUILDING AND DESIGN CODES REFERENCED WITHIN THESE DOCUMENTS. THE PROJECT DOCUMENTS REFER TO THE FOLLOWING CODES AND STANDARDS, UON:

CALIFORNIA BUILDING CODE (CBC) 2019 WITH DSA/SS AMENDMENTS

CD-2 LIVE LOADS (SERVICE LEVEL):
RAMPS & RAISED WALKWAYS 100 LBS./SQ. FT.
ROOFS 20 LBS./SQ. FT.

CD-3 RISK CATEGORY: **II**

CD-4 WIND LOAD DESIGN DATA (STRENGTH LEVEL):
MAIN WIND FORCE RESISTING SYSTEM
BASIC WIND SPEED, V **95** MPH
EXPOSURE **C**

ROOF EFFECTIVE WIND AREA = **[10]** SF
MONOSLOPE OPEN ROOF= **[24]** PSF
OVERHANG EDGE= **[41]** PSF OVERHANG CORNER= **[52]** PSF
HEIGHT: 15 FT OR LESS

CD-5 SEISMIC LOAD DESIGN DATA (STRENGTH LEVEL):

SEISMIC IMPORTANCE FACTOR (I_e)	1.0
S_s	1.872 g
S_1	0.630 g
S_{DS}	1.248 g
S_{D1}	0.630 g
SITE CLASS	D
SEISMIC DESIGN CATEGORY	D
LATERAL SYSTEM DESCRIPTION	TIMBER FRAMES
SEISMIC RESPONSE COEFFICIENT (Cs)	0.83W
RESPONSE MODIFICATION FACTOR (R)	1.5
ANALYSIS PROCEDURE DESCRIPTION	EQUIVALENT LATERAL FORCE

CD-6 IN CASES WHERE THE CONTRACTOR DETERMINES THAT SUSPENDED LOADS EXIST WHICH EXCEED DESIGN LOADS INDICATED ON CONTRACT DOCUMENTS, CONTRACTOR SHALL SUBMIT LOAD DATA TO DESIGN PROFESSIONALS FOR REVIEW PRIOR TO PROCEEDING WITH WORK.

CD-7 DISTRIBUTE THE MAXIMUM LOAD HUNG FROM ANY STRUCTURAL MEMBER FOR DUCTWORK, PIPING ETC OVER THE MEMBER'S TRIBUTARY AREA IN A WAY THAT THE MEP DESIGN SUPERIMPOSED DEAD LOADS LISTED IN CONTRACT DOCUMENTS ARE NOT EXCEEDED. THE CONTRACTOR SHALL COORDINATE THE LOADS OF ALL TRADES AND PROVIDE ADDITIONAL SUPPORT OR DISTRIBUTION FRAMING AS REQUIRED TO ACHIEVE THE ALLOWABLE LOAD DISTRIBUTION.

CD-8 CONNECTIONS OF SYSTEMS DESIGNED BY CONTRACTOR'S ENGINEER SUCH AS, BUT NOT LIMITED TO, CLADDING, STAIRS, ELEVATORS, ESCALATORS, PRECAST, AND MEP LOADS ARE ASSUMED TO IMPOSE VERTICAL AND/OR HORIZONTAL LOADS ON THE BASE BUILDING STRUCTURAL MEMBERS WITHOUT GENERATING TORSION IN THE SUPPORTING STRUCTURAL MEMBERS. CONTRACTOR IS RESPONSIBLE FOR FURNISHING AND INSTALLING ALL SUPPLEMENTARY BRACING MEMBERS AS REQUIRED TO PREVENT TORSION ON THE BASE BUILDING

SU SUBMITTALS

SU-1 REFER TO SPECIFICATON SECTION 01 3300 FOR SUBMITTAL SCHEDULE AND PROCEDURES.

SU-2 NOT USED.

SU-3 NOT USED.

SU-4 THE FOLLOWING ITEMS REQUIRE SUBMITTALS FOR STRUCTURAL REVIEW AS OUTLINED IN THE SPECIFICATIONS:

032000 S CONCRETE REINFORCING LAYOUT
033000 CALC CONCRETE MIX DESIGNS

S =SHOP DRAWINGS REQUIRED

CALC = SUPPORTING CALCULATIONS REQUIRED, SEALED AND SIGNED BY A PROFESSIONAL/STRUCTURAL ENGINEER LICENSED IN CALIFORNIA.

FN FOUNDATIONS

FN-1 THE FOUNDATION DESIGN IS BASED ON THE PRESUMPTIVE VALUES IN CBC 2019 TABLE 1806A.2.

CM CONCRETE MATERIALS

CM-1 CONCRETE STRENGTH SHALL MEET THE FOLLOWING 28-DAY COMPRESSIVE STRENGTH (f' c):
DRILLED PIERS 4,000 PSI

CM-2 PROVIDE NORMALWEIGHT CONCRETE WITH CURED DENSITY OF 145 +/- 5 PCF, AND AGGREGATE CONFORMING TO ASTM C33, UON.

CM-3 THE USE OF CALCIUM CHLORIDE AND OTHER CHLORIDE CONTAINING AGENTS IS PROHIBITED. THE USE OF RECYCLED CONCRETE IS PROHIBITED. PLACEMENT WITHIN AND CONTACT BETWEEN ALUMINUM ITEMS, INCLUDING ALUMINUM CONDUIT, AND CONCRETE IS PROHIBITED.

CM-4 ALL CAST-IN-PLACE CONCRETE WILL EXPERIENCE DIFFERING VARIATIONS OF CRACKING. ANY ELEMENT EXPOSED TO DIRECT WEATHER AND/OR TEMPERATURE VARIATIONS DURING CONSTRUCTION OR IN THE FINAL CONDITION IS TO BE TREATED AND REGULARLY MAINTAINED TO PREVENT PROPAGATION OF CRACKS AND WATER PENETRATION. THE CONTRACTOR SHALL DEVELOP A REGULAR MAINTENANCE PROGRAM AND SUBMIT IT TO THE OWNER.

RE CONCRETE REINFORCEMENT

RE-1 ALL CONCRETE SHALL INCLUDE REINFORCEMENT. IF REINFORCEMENT IS NOT SPECIFICALLY INDICATED ON THE DRAWINGS VERIFY WITH THE SER.

RE-2 REINFORCEMENT SHALL CONFORM TO THE FOLLOWING
DEFORMED BARS:ASTM A615 GRADE 60
WELDABLE DEFORMED BARS:ASTM A706

RE-3 DETAIL REINFORCEMENT BASED ON THE PROJECT REQUIREMENTS, ACI-318 AND ACI-315, UON.

RE-4 WHERE A 90-DEG, 135 –DEG OR 180-DEG HOOK IS GRAPHICALLY INDICATED, PROVIDE CORRESPONDING ACI STANDARD HOOKS UON.

RE-5 REINFORCEMENT SHALL HAVE CONCRETE PROTECTION (CLEAR COVER) PER ACI 318 UNLESS OTHERWISE INDICATED ON THE DRAWINGS.

WD WOOD

WD-1 ALL FRAMING LUMBER SHALL BE DOUGLAS FIR, UON. GRADE SHALL BE AS FOLLOWS:

JOIST AND RAFTERS: NO. 1
POST, BEAMS, HEADERS: NO. 1
STUDS, PLATES, BLOCKS
LIGHT FRAMING AND MISC: NO. 2

WD-2 ALL LUMBER IN CONTACT WITH CONCRETE OR ASPHALT 6'-0" OR LESS ABOVE GROUND SHALL BE PRESSURE TREATED.

WD-3 LUMBER MOISTURE CONTENT: SEE SPECIFICATIONS

WD-4 REJECTION OF WOOD MEMBERS: THE PROVISION IN DOC PS 20 (AS REFERENCED BY CBC 2303.1.1) WHICH PERMITS 5 PERCENT OF THE MATERIAL TO FALL BELOW GRADE SHALL NOT BE CONSTRUED TO PERMIT BELOW-GRADE MATERIAL TO BE USED AS LOAD-CARRYING MEMBERS WHICH HAVE BEEN DESIGNED FOR SPECIFIED ALLOWABLE STRESSES AND ACCEPTABLE SAFETY FACTORS. MATERIALS WHICH FALL BELOW GRADE SHALL BE REJECTED FOR LOAD-CARRYING USE. WOOD MEMBERS WHICH ARE REQUIRED TO CARRY DESIGN LOADS AND WHICH THE PROJECT ARCHITECT, ENGINEER OR INSPECTOR JUDGE TO BE MISGRADED SHALL BE REINSPECTED BY A QUALIFIED LUMBER GRADING INSPECTOR TO VERIFY THE PROPER GRADING OF THE MATERIAL. WOOD MEMBERS WHICH HAVE PERMISSIBLE GRADE CHARACTERISTICS OR DEFECTS IN SUCH COMBINATION AS TO AFFECT THE SERVICEABILITY OF THE MEMBER SHALL BE REJECTED BY THE PROJECT INSPECTOR WITH THE CONCURRENCE OF THE ARCHITECT OR STRUCTURAL ENGINEER.

WD-5 STRUCTURAL SHEATHING:

A. ROOF SHEATHING: 15/32" APA RATED SHEATHING 32/16", EXPOSURE 1, PS1-07, 5 PLY

WD-7 REDLAM LAMINATED VENEER LUMBER (LVL): AS MANUFACTURED BY RED-BUILT, ICC-ES REPORT ESR-2993

WD-8 PARALLAM PARALLEL STRAND LUMBER (PSL): AS MANUFACTURED BY I-LEVEL, ICC-ES REPORT ESR-1387, DSA PA-047

WD-9 TIMBERSTRAND LAMINATED STRAND LUMBER (LSL): AS MANUFACTURED BY I-LEVEL, ICC-ES REPORT ESR-1387, DSA PA-049.

WD-10 XL-3 STUDS: AS MANUFACTURED BY STANDARD STRUCTURES, SANTA ROSA, CALIFORNIA, ICC-ES REPORT ER-4901.

WD-11 GLUED-LAMINATED BEAMS:

A. 24FV4 FOR SIMPLE SPANS AND 24FV8 FOR CANTILEVERED AND CONTINUOUS BEAMS.
B. APPEARANCE: INDUSTRIAL GRADE TYP.; ARCHITECTURAL GRADE IF EXPOSED.
C. CAMBER TO RADIUS OF 3500' UON
D. GLULAM BEAMS SHALL BE CONTINUOUSLY INSPECTED PER 1704A6.2.1 BY A GLUE FABRICATION INSPECTOR APPROVED BY DSA. ALL GLULAM BEAMS SHALL BE STAMPED WITH AN IDENTIFICATION MARK.

WD-12 FRAMING HARDWARE: AS MANUFACTURED BY SIMPSON CO. OR APPROVED EQUAL. SIMPSON DESIGNATIONS USED.

WD-13 NAILS: COMMON WIRE GAGE UON. NAILING TO CONFORM TO CBC TABLE 2304.9.1, UON.

USE OF MACHINE NAILING IS SUBJECT TO A SATISFACTORY JOBSITE DEMONSTRATION FOR EACH PROJECT AND THE APPROVAL OF THE PROJECT ARCHITECT OR STRUCTURAL ENGINEER AND DSA. THE APPROVAL IS SUBJECT TO CONTINUED SATISFACTORY PERFORMANCE. IF THE NAIL HEADS PENETRATE THE OUTER PLY MORE THAN WOULD BE NORMAL FOR A HAND-HELD HAMMER, OR IF MINIMUM ALLOWABLE EDGE DISTANCES ARE NOT MAINTAINED, THE PERFORMANCE WILL BE DEEMED UNSATISFACTORY AND MACHINE NAILING SHALL BE DISCONTINUED. FOR PLYWOOD SHEARWALLS WITH PLYWOOD ON BOTH SIDES OF WALL, MACHINE NAILING WILL BE ALLOWED ON ONE SIDE OF WALL ONLY.

WD-14 PROVIDE LATERAL SUPPORT FOR BEAMS, JOISTS AND RAFTERS PER CBC 2308.8.5.

WD-15 NAILS, BOLTS AND SCREWS FOR PRESSURE PRESERVATIVE TREATED AND FIRE RETARDANT TREATED WOOD SHALL BE HOT-DIPPED ZINC COATED GALVANIZED.

SS STRUCTURAL STEEL

SS-1 CONNECTION MATERIAL SHALL CONFORM TO THE FOLLOWING MINIMUM REQUIREMENTS:

ANGLES:	ASTM A572 OR A529, MINIMUM YIELD STRENGTH 50 KSI UON
WTs:	ASTM A572 OR A992, MINIMUM YIELD STRENGTH 50 KSI
PLATES:	ASTM A572 OR A529, MINIMUM YIELD STRENGTH 50 KSI UON
BOLTS:	ASTM A307
NUTS:	ASTM A563
WASHERS:	ASTM F436
ANCHOR RODS:	ASTM F1554 GRADE 36
WELD ELECTRODES:	E70XX

SS-2 FOR STEEL MEMBERS AND EMBEDMENTS EXPOSED TO WEATHER, PROVIDE HOT-DIPPED GALVANIZED FINISH OR APPROVED ZINC RICH EXTERIOR COATING SYSTEM.

SS-3 PROVIDE HOLES IN ALL STEEL AS REQUIRED TO PREVENT ANY ACCUMULATION OF WATER. ALL PENETRATIONS THROUGH MAIN MEMBERS SHALL NOT EXCEED 1 1/8" DIA. AND SHALL BE GROUND SMOOTH. THESE DRAINS MUST BE KEPT CLEAN AND OPEN.

SS-4 SHOW ALL COPES, HOLES, OPENINGS AND MODIFICATIONS REQUIRED IN STRUCTURAL STEEL MEMBERS FOR ERECTION OR THE WORK OF OTHER TRADES ON THE SHOP DRAWINGS FOR APPROVAL BY THE DESIGN PROFESSIONALS.

ABBREVIATION	DESCRIPTION
ADDL	ADDITIONAL
ADJ	ADJACENT
ALT	ALTERNATE
APPRX	APPROXIMATE
ARCH	ARCHITECT OR ARCHITECTURAL
B/	BOTTOM OF
B/B	BACK TO BACK
BAL	BALANCE
BLDG	BUILDING
BLK	BLOCK
BLKG	BLOCKING
BM	BEAM
BOT	BOTTOM
BRDG	BRIDGING
BRG	BEARING
BTWN	BETWEEN
C	COMPRESSION
C/C	CENTER TO CENTER
CIP	CAST-IN-PLACE
CL	CENTER LINE
CLR	CLEAR OR CLEARANCE
COL	COLUMN
COMP	COMPRESSION
CONC	CONCRETE
CONN	CONNECTION(S)
CONST	CONSTRUCTION
CONT	CONTINUOUS
DBL	DOUBLE
DCW	DEMAND CRITICAL WELD
DEG	DEGREE(S)
DET	DETAIL
DIA	DIAMETER
DIAG	DIAGONAL
DIM(S)	DIMENSION(S)
DL	DEAD LOAD
DWG(S)	DRAWING(S)
DWL	DOWEL(S)
EA	EACH
ECC	ECCENTRICITY
EF	EACH FACE
EL	ELEVATION
ELEC	ELECTRICAL
ENGR	ENGINEER
EOD	EDGE OF DECK
EQ	EQUAL
EQUIP	EQUIPMENT
EW	EACH WAY
EXP	EXPANSION
EXST	EXISTING
EXT	EXTERIOR
F/F	FACE TO FACE
FIN	FINISH(ED)
FLR	FLOOR
FND	FOUNDATION
FS	FAR SIDE
FTG	FOOTING
GA	GAGE, GAUGE
GALV	GALVANIZED
GEN	GENERAL
GR	GRADE
HK	HOOK
HORIZ	HORIZONTAL
HP	HIGH POINT
HT	HEIGHT
ID	INSIDE DIAMETER
IF	INSIDE FACE
INFO	INFORMATION
INT	INTERIOR
INTRM	INTERMEDIATE
JST(S)	JOIST(S)
JT	JOINT
K	KIPS (1,000 POUNDS)
KLF	KIP PER LINEAR FOOT
KSF	KIP PER SQUARE FOOT
LL	LIVE LOAD
LLH	LONG LEG HORIZONTAL
LLV	LONG LEG VERTICAL
LONG	LONGITUDINAL
LP	LOW POINT
LW	LIGHTWEIGHT
M	MOMENT
MATL	MATERIAL
MAX	MAXIMUM
MC	MOMENT CONNECTION(S)
MECH	MECHANICAL
MEP	MECHANICAL, ELECTRICAL, PLUMBING, FIRE PROTECTION
MFR	MANUFACTURER
MID	MIDDLE
MIN	MINIMUM
MISC	MISCELLANEOUS
NIC	NOT IN CONTRACT
NO	NUMBER
NOM	NOMINAL
NS	NEAR SIDE
NTS	NOT TO SCALE
NW	NORMAL WEIGHT
NWC	NORMALWEIGHT CONCRETE
OC	ON CENTER
OD	OUTSIDE DIAMETER
OF	OUTSIDE FACE
OH	OPPOSITE HAND
OPNG(S)	OPENING(S)
OPP	OPPOSITE

ABBREVIATION	DESCRIPTION
OSL	OUTSTANDING LEG
PC	PIECE
PCY	POUNDS PER CUBIC YARD
PERP	PERPENDICULAR
PG	PLATE GIRDER
PL	PLATE
PRLL	PARALLEL
PSF	POUNDS PER SQUARE FOOT
PSI	POUNDS PER SQUARE INCH
PT	POIN
RAD	RADIUS
REF	REFERENCE
REINF	REINFORCE(D) (ING) OR (MENT)
REQD	REQUIRED
S&T	SHRINKAGE AND TEMPERATURE
SCHED	SCHEDULE(D)
SDL	SUPERIMPOSED DEAD LOAD
SECT	SECTION
SER	STRUCTURAL ENGINEER OF RECORD
SF	SQUARE FOOT (FEET)
SFRS	SEISMIC FORCE RESISTING SYSTEM
SHT	SHEET
SIM	SIMILAR
SOG	SLAB ON GRADE
SP	SPACE
SPEC(S)	SPECIFICATION(S)
STD	STANDARD
STL	STEEL
STR	STRUCTURE
STRCTL	STRUCTURAL
SYM	SYMMETRICAL
T	TENSION
T&B	TOP AND BOTTOM
T/	TOP OF
TEMP	TEMPERATURE OR TEMPORARY
TEN	TENSION
THK	THICK OR THICKNESS
TYP	TYPICAL
UON	UNLESS OTHERWISE NOTED
V	SHEAR
VERT	VERTICAL
VIF	VERIFY IN FIELD
W/	WITH
W/O	WITHOUT
WD	WOOD
WP	WORK POINT
WPFG	WATERPROOFING
WS	WATERSTOP

IDENTIFICATION STAMP
DIV. OF THE STATE ARCHITECT
APP: 01-119031 INC:
REVIEWED FOR
SS ☑ FLS ☑ ACS ☑
DATE: 10/22/2020

LPAS
2484 Natomas Park Drive Suite 100 Sacramento CA 95833
916 443 0335 lpasdesign.com Architecture + Design

LAS POSITAS TEMPORARY FACULTY VILLAGE MODULAR OFFICES

LAS POSITAS COMMUNITY COLLEGE
LIVERMORE, CA

ARCHITECT'S STAMP APPROVAL

THIS DOCUMENT CONTAINS INFORMATION THAT IS PROPRIETARY TO LPAS, INC. AND IS FURNISHED FOR THE PURPOSES OF REVIEW, BIDDING OR CONSTRUCTION OF THE PROJECT LISTED IN THE JOB TITLE BOX ABOVE AND SHALL NOT BE USED FOR ANY OTHER PURPOSE OR RELEASED TO ANY OTHER PARTY WITHOUT THE WRITTEN CONSENT OF LPAS, INC. INFORMATION CONTAINED HEREIN IS AN INSTRUMENT OF PROFESSIONAL SERVICES AND SHALL REMAIN THE PROPERTY OF LPAS, INC. ALL RIGHTS RESERVED COPYRIGHT © 2009.

THIS DRAWING IS NOT FINAL OR TO BE USED FOR CONSTRUCTION UNTIL IT IS SIGNED BY THE ARCHITECT AND ENGINEER.

Thornton Tomasetti
Thornton Tomasetti, Inc.
680 California St., 14th Floor
San Francisco, CA 94108
T 415.365.6900 F 415.365.6901

REGISTERED PROFESSIONAL ENGINEER JUSTIN D. FAHEY S 4833 STRUCTURAL STATE OF CALIFORNIA

TITLE:

COVER SHEET & DRAWING LIST & ABBREVIATIONS

PROJECT NO: **U20003.00**
DATE: **08/28/2020**

SHEET NO:

S1.00S

FOR CONSTRUCTION

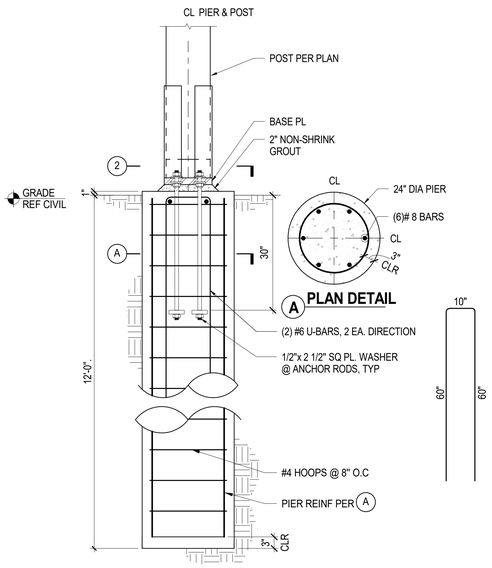

1 DRILLED PIER

SCALE: 3/4" = 1'-0"

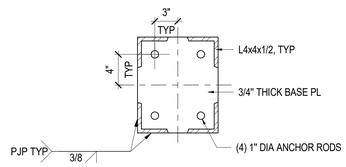

2 BASE DETAIL

SCALE: 1 1/2" = 1'-0"

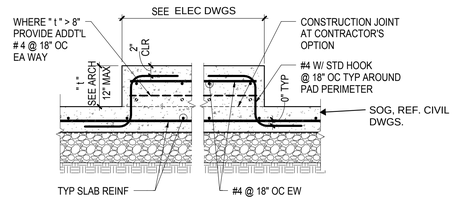

A HOUSEKEEPING PAD AT SLAB-ON-GRADE

3 HOUSEKEEPING PADS

NOT TO SCALE

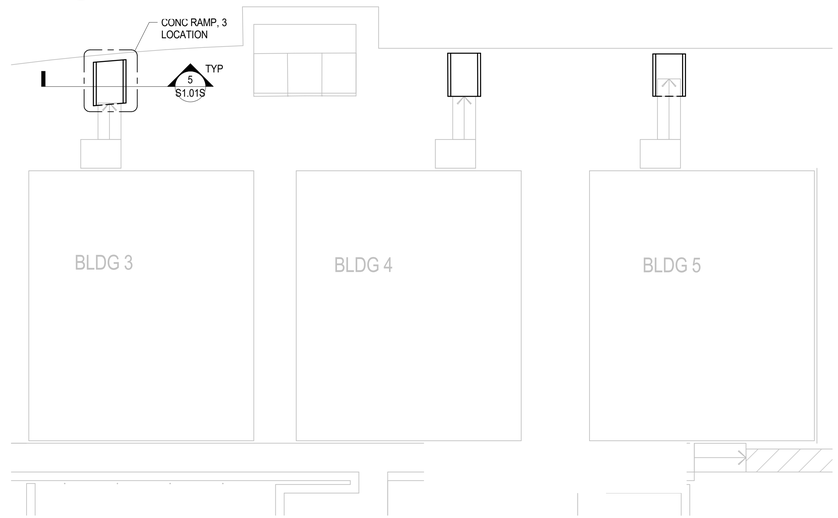

4 PARTIAL PLAN

NOT TO SCALE

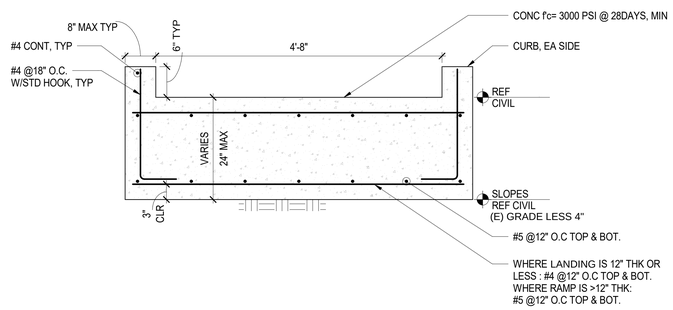

5 CROSS SECTION AT CONCRETE LANDING

SCALE: 1" = 1'-0"

PA POST-INSTALLED ANCHORS

PA-1) POST-INSTALLED ANCHORS INCLUDE EXPANSION ANCHORS, SCREW ANCHORS, EPOXY ANCHORS/DOWELS, AND POWDER-ACTUATED FASTENERS.

PA-2) INSTALL POST-INSTALLED ANCHORS IN ACCORDANCE WITH THE APPLICABLE ICC-ES REPORT AND THE MANUFACTURER'S RECOMMENDATIONS.

PA-3) USE SCANNING EQUIPMENT OR OTHER MEANS TO LOCATE AND AVOID CUTTING OR DAMAGING REINFORCING BARS. SER APPROVAL IS REQUIRED PRIOR TO CUTTING OR DAMAGING REINFORCING.

PA-4) SPECIAL INSPECTION IS REQUIRED FOR ALL POST-INSTALLED ANCHOR INSTALLATIONS, UON.

PA-5) FIELD TESTING OF POST-INSTALLED ANCHORS IS REQUIRED, UON. TEST INSTALLED ANCHORS IN ACCORDANCE WITH THE FOLLOWING:

B. TEST 50% OF ANCHORS AT ALL NON-STRUCTURAL APPLICATIONS (SUCH AS EQUIPMENT ANCHORAGE). UON.

D. IF ANY ANCHOR FAILS TESTING, TEST ALL ANCHORS OF THE SAME TYPE

G. TORQUE TESTS: TO BE ACCEPTABLE, THE APPLICABLE TEST TORQUEMUST BE REACHED WITHIN ONE-HALF TURN OF THE NUT.
H. TEST EQUIPMENT IS TO BE CALIBRATED BY AN APPROVED TESTING LABORATORY IN ACCORDANCE WITH STANDARD RECOGNIZED PROCEDURES.
I. FIELD TESTING SHALL BE DONE IN THE PRESENCE OF THE PROJECT INSPECTOR.
J. TESTING SHOULD OCCUR A MINIMUM OF 24 HOURS AFTER INSTALLATION OF THE SUBJECT ANCHOR.

PA-6) EXPANSION ANCHORS

A. EXPANSION ANCHORS SHALL BE EITHER ONE OF THE FOLLOWING, UON:

HILTI KWIK BOLT TZ
(ICC-ES REPORT ESR-1917)

SIMPSON STRONG-BOLT 2
(ICC-ES REPORT ESR-3037)

USE OF CARBON STEEL EXPANSION ANCHORS IS LIMITED TO DRY, INTERIOR LOCATIONS. USE STAINLESS STEEL EXPANSION ANCHORS AT EXTERIOR, WEATHER-EXPOSED, OR DAMP LOCATIONS.

B. ANCHOR EMBEDMENTS BELOW ARE TO BE USED WHEN EXPLICITLY SPECIFIED IN THE STRUCTURAL DRAWINGS. FOR LOCATIONS WHERE TENSION TEST VALUES ARE NOT SPECIFIED IN THE DRAWINGS, CONSULT WITH THE SER.

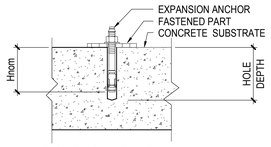

CONCRETE SLAB

C. Hnom IS MEASURED FROM FACE OF CONCRETE SUBSTRATE TO THE END OF THE BOLT.
D. CONTRACTOR SHALL PROVIDE ANCHORS WITH SUFFICIENT TOTAL LENGTH FOR THE SPECIFIED EMBEDMENT LENGTH, THICKNESS OF FASTENED PART, WASHER AND NUT.

HILTI KWIK BOLT TZ IN NORMAL-WEIGHT CONCRETE			
ANCHOR DIAMETER	Hnom	MINIMUM HOLE DEPTH	TORQUE TEST VALUE (FT-LBS)
3/8"	2 5/16"	2 5/8"	25
1/2"	2 3/8"	2 5/8"	40
5/8"	4 7/16"	4 3/4"	60
3/4"	5 9/16"	5 3/4"	110

SIMPSON STRONG-BOLT 2 IN NORMAL-WEIGHT CONCRETE			
ANCHOR DIAMETER	Hnom	MINIMUM HOLE DEPTH	TORQUE TEST VALUE (FT-LBS)
3/8"	1 7/8"	2"	30
1/2"	2 3/4"	3"	60
5/8"	5 1/8"	5 3/8"	90
3/4"	5 3/4"	6"	150

IDENTIFICATION STAMP
DIV. OF THE STATE ARCHITECT
APP: 01-119031 INC:
REVIEWED FOR
SS ☑ FLS ☑ ACS ☑
DATE: 10/22/2020

LPAS

2484 Natomas Park Drive Suite 100 Sacramento CA 95833
916 443 0335 lpasdesign.com Architecture + Design

LAS POSITAS
TEMPORARY FACULTY
VILLAGE MODULAR
OFFICES

LAS POSITAS COMMUNITY COLLEGE
LIVERMORE, CA

ARCHITECT'S STAMP APPROVAL

THIS DOCUMENT CONTAINS INFORMATION THAT IS PROPRIETARY TO LPAS, INC. AND IS FURNISHED FOR THE PURPOSES OF REVIEW, BIDDING OR CONSTRUCTION OF THE PROJECT LISTED IN THE JOB TITLE BOX ABOVE AND SHALL NOT BE USED FOR ANY OTHER PURPOSE OR RELEASED TO ANY OTHER PARTY WITHOUT THE WRITTEN CONSENT OF LPAS, INC. INFORMATION CONTAINED HEREIN IS AN INSTRUMENT OF PROFESSIONAL SERVICES AND SHALL REMAIN THE PROPERTY OF LPAS, INC. ALL RIGHTS RESERVED COPYRIGHT © 2009.

THIS DRAWING IS NOT FINAL OR TO BE USED FOR CONSTRUCTION UNTIL IT IS SIGNED BY THE ARCHITECT AND ENGINEER.

Thornton Tomasetti
Thornton Tomasetti, Inc.
650 California St., 14th Floor
San Francisco, CA 94108
T 415.365.6900 F 415.365.6901

REGISTERED PROFESSIONAL ENGINEER JUSTIN D. FARLEY S 4833 STRUCTURAL STATE OF CALIFORNIA

TITLE:

CONCRETE & STEEL DETAILS

PROJECT NO: U20003.00
DATE: 08/28/2020

SHEET NO:

S1.01S

FOR CONSTRUCTION

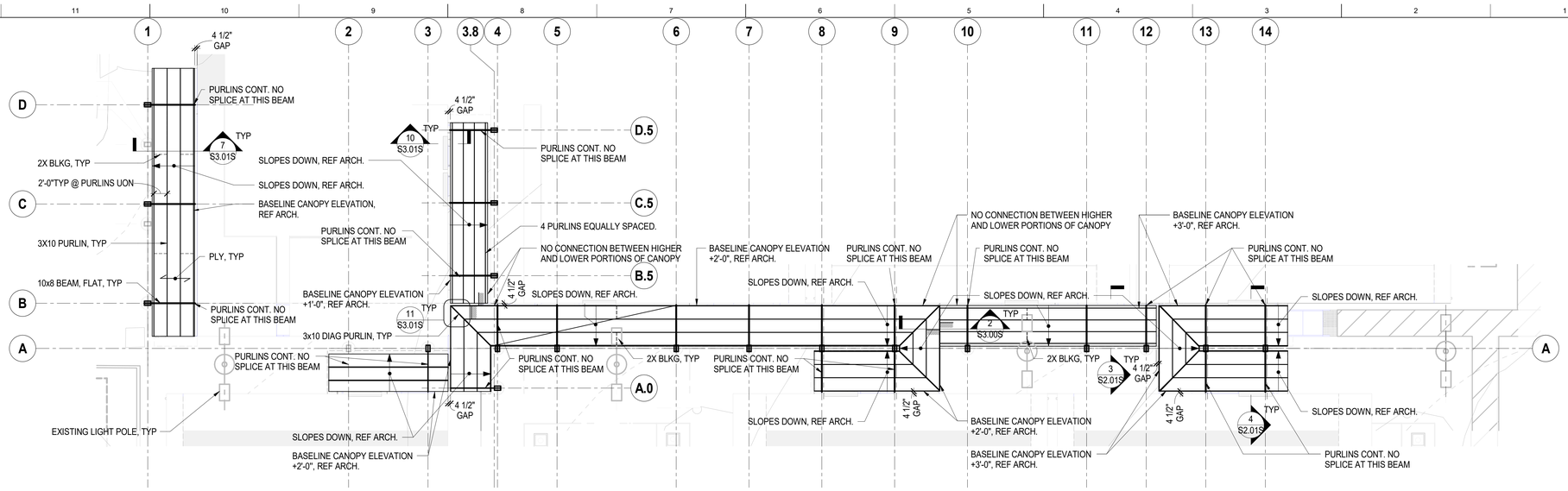

2 ROOF FRAMING PLAN

SCALE: 1/8" = 1'-0"

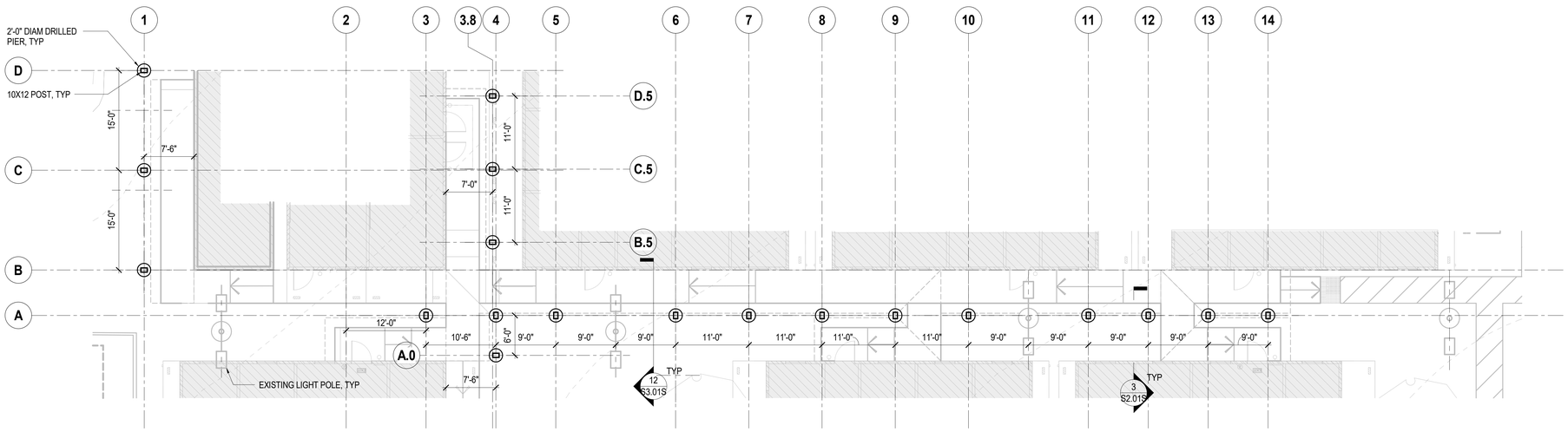

1 FOUNDATION PLAN

SCALE: 1/8" = 1'-0"

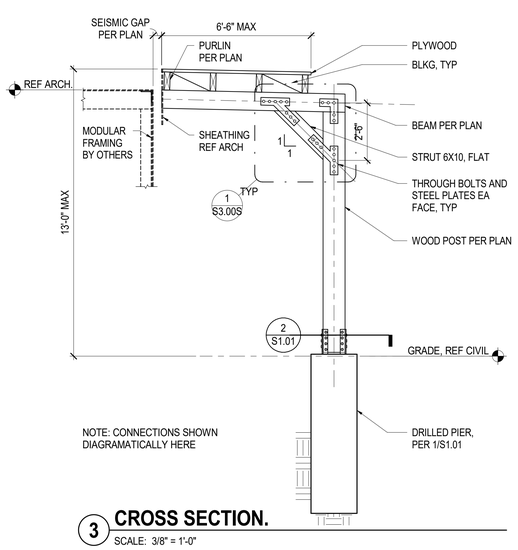

3 CROSS SECTION.

SCALE: 3/8" = 1'-0"

1. SEE GENERAL NOTES ON SHEET S1.00S.
2. VERIFY ALL DIMENSIONS AND ELEVATIONS WITH ARCHITECTURAL DRAWINGS.
3. FOR DRAINAGE DETAILS, SUMPS, PITS, DAMP PROOFING, TRENCHES, CURBS, EXTERIOR WALLS, UTILITIES, EQUIPMENT DETAILS, STEPS, ETC., SEE DRAWINGS OTHER THAN STRUCTURAL.
4. VERIFY LOCATION OF UNDERGROUND UTILITIES BEFORE EXCAVATIONS. NOTIFY ARCHITECT PRIOR TO EXCAVATION IN THE EVENT SUCH UTILITIES ARE ENCOUNTERED.
5. MARK 1 DENOTES PLYWOOD DIAPHRAGM. SEE 5/S3.00S.
6. ALL DIAPHRAGM AND SHEAR TRANSFER NAILING SHALL UTILIZE COMMON OR GALVANIZED BOX NAILS.
7. ALL BOLT HOLES SHALL BE DRILLED TO 1/32" OR 1/16" OVERSIZED.

5 PLAN NOTES

SCALE: 1" = 1'-0"

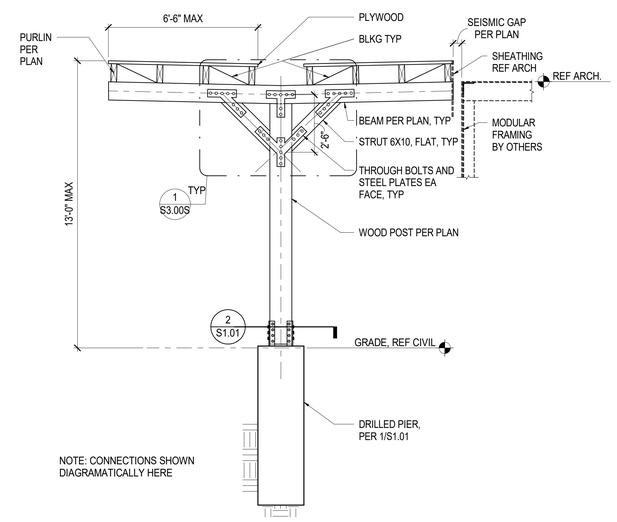

4 CROSS SECTION

SCALE: 3/8" = 1'-0"

IDENTIFICATION STAMP
DIV. OF THE STATE ARCHITECT
APP: 01-119031 INC:
REVIEWED FOR
SS ☑ FLS ☑ ACS ☑
DATE: 10/22/2020

LPAS

2484 Natomas Park Drive Suite 100 Sacramento CA 95833
916 443 0335 lpasdesign.com Architecture + Design

LAS POSITAS TEMPORARY FACULTY VILLAGE MODULAR OFFICES

LAS POSITAS COMMUNITY COLLEGE
LIVERMORE, CA

ARCHITECT'S STAMP APPROVAL

THIS DOCUMENT CONTAINS INFORMATION THAT IS PROPRIETARY TO LPAS, INC. AND IS FURNISHED FOR THE PURPOSES OF REVIEW, BIDDING OR CONSTRUCTION OF THE PROJECT LISTED IN THE JOB TITLE BOX ABOVE AND SHALL NOT BE USED FOR ANY OTHER PURPOSE OR RELEASED TO ANY OTHER PARTY WITHOUT THE WRITTEN CONSENT OF LPAS, INC. INFORMATION CONTAINED HEREIN IS AN INSTRUMENT OF PROFESSIONAL SERVICES AND SHALL REMAIN THE PROPERTY OF LPAS, INC. ALL RIGHTS RESERVED COPYRIGHT © 2009.

THIS DRAWING IS NOT FINAL OR TO BE USED FOR CONSTRUCTION UNTIL IT IS SIGNED BY THE ARCHITECT AND ENGINEER.

Thornton Tomasetti
Thornton Tomasetti, Inc.
650 California St., 14th Floor
San Francisco, CA 94108
T 415.365.6900 F 415.365.6901

REGISTERED PROFESSIONAL ENGINEER JUSTIN D. FAHEY S 4833 STRUCTURAL STATE OF CALIFORNIA

TITLE:

PLANS AND SECTIONS

PROJECT NO: U20003.00
DATE: 08/28/2020

SHEET NO:

S2.01S

FOR CONSTRUCTION

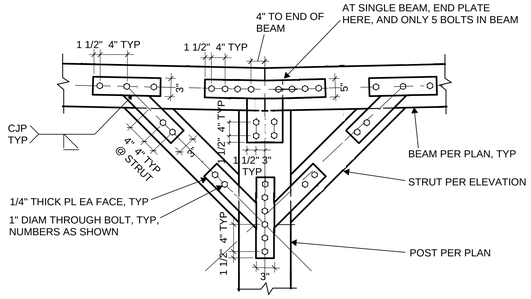

1 POST-BEAM CONNECTION

SCALE: NOT TO SCALE

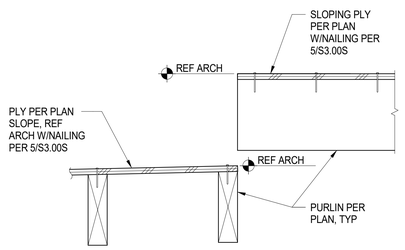

2 CANOPY STEP

SCALE: 1 1/2" = 1'-0"

	CONNECTION	NAILING [a,m]
1.	Joist to sill or girder, toenail	3-8d
2.	Bridging to joists, toenail each end	2-8d
3.	1" x 6" subfloor or less to each joist, face nail	2-8d
4.	Wider than 1" x 6" subfloor to each joist, face nail	3-8d
5.	2" subfloor to joist or girder, blind and face nail	2-16d
6.	Sole plate to joist or blocking, typical face nail Sole plate to joist or blocking, at braced wall panels	16d at 16" OC 3-16d per 16"
7.	Top plate to stud, end nail	2-16d
8.	Stud to sole plate	4-8d, toenail or 2-16d, end nail [s]
9.	Double studs, face nail	16d at 24"OC
10.	Double top plates, typical face nail	16d at 16"OC UON
11.	Blocking between joists or rafters to top plate, toenail	3-8d
12.	Rim joist to top plate, toenail	8d at 6" OC
13.	Top plates, laps and intersections, face nail	2-16d
14.	Continuous header, two pieces	16d at 16" OC along each side
15.	Ceiling joists to plate, toenail	3-8d
16.	Continuous header to stud, toenail	4-8d
17.	Ceiling joist, laps over partitions, face nail	3-16d [q]
18.	Ceiling joists to parallel rafters, face nail	3-16d [q]
19.	Rafter to plate, toenail	3-8d [r]
20.	1" brace to each stud and plate, face nail	2-8d
21.	1" x 8" sheathing or less to each bearing, face nail	3-8d
22.	Wider than 1" x 8" sheathing to each bearing, face nail	3-8d
23.	Built-up corner studs	16d at 24" OC
24.	Built-up girder and beams	20d at 32" OC face nail at top & bottom & staggered on opposite sides 2-20d face nail at ends
25.	2" planks	16d at each bearing
26.	Collar tie to rafter, face nail	3-10d
27.	Jack rafter to hip, toenail Jack rafter to hip, facenail	3-10d 2-16d
28.	Roof rafter to 2-by ridge beam, toenail Roof rafter to 2-by ridge beam, face nail	2-16d 2-16d
29.	Joist to band joist, face nail	3-16d
30.	Ledger strip, face nail	3-16d each stud
31.	Wood structural panels and particleboard [b] Subfloor, roof and wall sheathing (to framing): 1/2" and less 19/32" - 3/4" 7/8" - 1" 1 1/8" - 1 1/4" Combination subfloor-underlayment (to framing): 3/4" and less 7/8" - 1" 1 1/8" - 1 1/4"	 6d [c] 8d [d] or 6d [e] 8d [e] 10d [d] or 8d [e] 6d [e] 8d [e] 10d [d] or 8d [e]
32.	Panel siding (to framing): 1/2" or less 5/8"	 6d [f] 8d [f]
33.	Fiberboard Sheathing: [g] 1/2" 25/32"	 No 11 ga [h] 6d [d] No 16 ga [i] No 11 ga [h] 8d [d] No 16 ga [i]
34.	Interior paneling 1/4" 3/8"	 4d [j] 6d [k]

FOOTNOTES:

A. USE COMMON WIRE NAILS EXCEPT WHERE OTHERWISE STATED.

B. NAILS SPACED AT 6 INCHES ON CENTER AT EDGES. 12 INCHES AT INTERMEDIATE SUPPORTS EXCEPT 6 INCHES AT ALL SUPPORTS WHERE SPANS ARE 48 INCHES OR MORE. FOR NAILING OF WOOD STRUCTURAL PANEL AND PARTICLEBOARD DIAPHRAGMS AND SHEAR WALLS, REFER TO CBC (IBC) SECTION 2305. NAILS FOR WALL SHEATHING MAY BE COMMON, BOX OR CASING.

C. COMMON OR DEFORMED SHANK. (6d-2", 8d-2 1/2", 10d-3")

D. COMMON. (6d-2", 8d-2 1/2", 10d-3")

E. DEFORMED SHANK. (6d-2", 8d-2 1/2", 10d-3")

F. CORROSION-RESISTANT SIDING OR CASING NAILS CONFORMING TO THE REQUIREMENTS OF SECTION 2304.9.5.

G. FASTENERS SPACED 3 INCHES ON CENTER AT EXTERIOR EDGES AND 6 INCHES ON CENTER AT INTERMEDIATE SUPPORTS, WHEN USED AS STRUCTURAL SHEATHING SPACING SHALL BE 6 INCHES ON CENTER ON THE EDGES AND 12" ON CENTER AT INTERMEDIATE SUPPORTS FOR NON STRUCTURAL APPLICATIONS.

H. CORROSION-RESISTANT ROOFING NAILS WITH 7/16" INCH-DIAMETER HEAD AND 1 1/2"-INCH LENGTH FOR 1/2"-INCH SHEATHING AND 1 3/4"-INCH LENGTH FOR 25/32-INCH SHEATHING CONFORMING TO THE REQUIREMENTS OF SECTION 2304.9.5.

I. CORROSION-RESISTANT STAPLES WITH NOMINAL 7/16-INCH CROWN AND 1-1/8-INCH LENGTH FOR 1/2-INCH SHEATHING AND 1 1/2-INCH LENGTH FOR 25/32-INCH SHEATHING CONFORMING TO THE REQUIREMENTS OF SECTION 2304.9.5.

J. CASING OR FINISH NAILS SPACED 6-INCHES ON PANEL EDGES, 12 INCHES AT INTERMEDIATE SUPPORTS.

K. PANEL SUPPORTS AT 24". CASING OR FINISH NAILS SPACED 6" ON PANEL EDGES, 12" AT INTERMEDIATE SUPPORTS.

L. FOR ROOF SHEATHING APPLICATIONS, 8D NAILS ARE THE MINIMUM REQUIRED FOR WOOD STRUCTURAL PANELS.

M. STAPLES SHALL HAVE A MINIMUM CROWN WIDTH OF 7/16 INCH.

N. FOR ROOF SHEATHING APPLICATIONS, FASTENERS SPACED 4 INCHES ON CENTER AT EDGES, 8 INCHES AT INTERMEDIATE SUPPORTS.

O. FASTENERS SPACED 4 INCHES ON CENTER AT EDGES, 8 INCHES AT INTERMEDIATE SUPPORTS FOR SUBFLOOR AND WALL SHEATHING AND 3 INCHES ON CENTER AT EDGES, 6 INCHES AT INTERMEDIATE SUPPORTS FOR ROOF SHEATHING.

P. FASTENERS SPACED 4 INCHES ON CENTER AT EDGES, 8 INCHES AT INTERMEDIATE SUPPORTS.

Q. FOR ROOF JOISTS AND RAFTERS, MINIMUM NAILING PER CBC (IBC)TABLE 2308.10.4.1.

R. FOR ROOF SLOPES 3:12 OR GREATER IN WHICH CEILING JOISTS SERVE AS A TIE FOR ROOF RAFTERS, MINIMUM NAILING OR HOLDOWN STRAPSMUST BE ADEQUATE TO WITHSTAND MINIMUM WIND UPLIFT PER CBC (IBC) TABLE 2308.10.1.

S. AT 3X SOLE, 2-20D END NAILS SHALL BE USED IN PLACE OF 2-16D END NAILS.

4 NAILING SCHEDULE

NOT TO SCALE

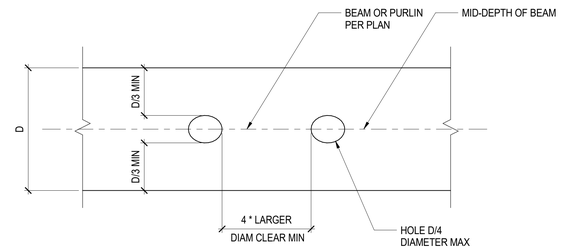

NOTE: IF HOLE IS LARGER THAN SHOWN, OR HOLES ARE TO BE SPACED CLOSER THAN SHOWN HERE, CONTACT SEOR.

3 HOLE DETAIL

SCALE: 1 1/2" = 1'-0"

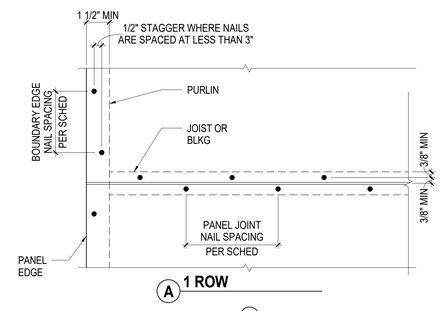

A 1 ROW

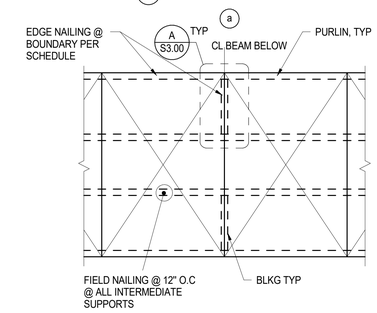

PLYWOOD NAILING SCHEDULE						
MARK	NAIL SIZE	BOUNDARY EDGE NAIL SPACING	CONTINUOUS PANEL JOINT EDGE NAIL SPACING	STAGGERED PANEL JOINT EDGE NAIL SPACING	DETAIL	BLOCKING REQUIRED
1	8d	6"	6"	6"	A	NO (4)

NOTES:
1. FOR 8d NAILS, PROVIDE 1 3/8" MINIMUM PENETRATION INTO FRAMING.
2. MINIMUM PLYWOOD SHEATHING WIDTH IS 24".
3. SEE GENERAL NOTES FOR PLYWOOD GRADES AND THICKNESS.
4. 1 PSCA/PSCL OR EQUIVALENT AS REQD FOR ALIGNMENT AT ALL PANEL EDGES.

5 DIAPHRAGM NAILING SCHEDULE

NOT TO SCALE

IDENTIFICATION STAMP
DIV. OF THE STATE ARCHITECT
APP: 01-119031 INC:
REVIEWED FOR
SS ☑ FLS ☑ ACS ☑
DATE: 10/22/2020

LPAS

2484 Natomas Park Drive Suite 100 Sacramento CA 95833
916 443 0335 lpasdesign.com Architecture + Design

LAS POSITAS TEMPORARY FACULTY VILLAGE MODULAR OFFICES

LAS POSITAS COMMUNITY COLLEGE
LIVERMORE, CA

ARCHITECT'S STAMP APPROVAL

THIS DOCUMENT CONTAINS INFORMATION THAT IS PROPRIETARY TO LPAS, INC. AND IS FURNISHED FOR THE PURPOSES OF REVIEW, BIDDING OR CONSTRUCTION OF THE PROJECT LISTED IN THE JOB TITLE BOX ABOVE AND SHALL NOT BE USED FOR ANY OTHER PURPOSE OR RELEASED TO ANY OTHER PARTY WITHOUT THE WRITTEN CONSENT OF LPAS, INC. INFORMATION CONTAINED HEREIN IS AN INSTRUMENT OF PROFESSIONAL SERVICES AND SHALL REMAIN THE PROPERTY OF LPAS, INC. ALL RIGHTS RESERVED COPYRIGHT © 2009.

THIS DRAWING IS NOT FINAL OR TO BE USED FOR CONSTRUCTION UNTIL IT IS SIGNED BY THE ARCHITECT AND ENGINEER.

Thornton Tomasetti
Thornton Tomasetti, Inc.
650 California St., 14th Floor
San Francisco, CA 94108
T 415.365.6900 F 415.365.6901

REGISTERED PROFESSIONAL ENGINEER JUSTIN D. FAHEY S 4833 STRUCTURAL STATE OF CALIFORNIA

TITLE:

TYPICAL WOOD DETAILS AND SCHEDULES

PROJECT NO: U20003.00
DATE: 08/28/2020

SHEET NO:

S3.00S

FOR CONSTRUCTION

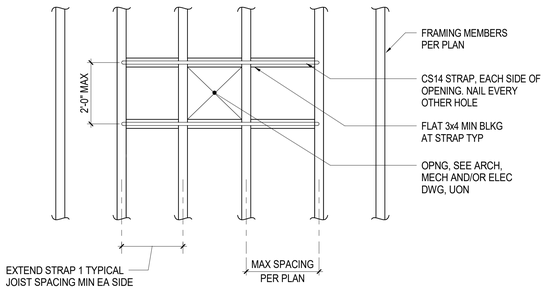

3 SMALL OPENING IN DIAPHRAGM

SCALE: 1/2" = 1'-0"

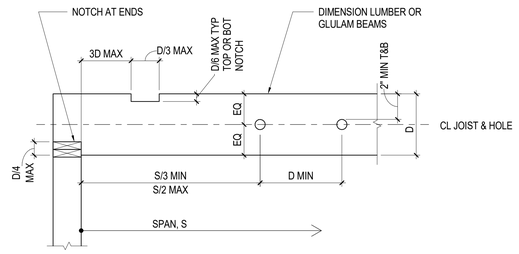

NOTE:

1. NOTCH MAY OCCUR TOP OR BOTTOM, NOT BOTH.
2. D IS DEFINED AS DEPTH OF JOIST OR BEAM. S IS DEFINED AS CLEAR SPAN OF JOIST OR BEAM.
3. MAXIMUM DIAMETER OF HOLE NOT TO EXCEED MINIMUM OF D/3 OR 2", WHICHEVER IS SMALLER.
4. PREDRILL CORNERS OF NOTCHES.
5. NO NOTCHES PERMITTED IN MIDDLE THIRD OF SPAN.

5 HOLES AND NOTCHES IN BEAMS

SCALE: 1" = 1'-0"

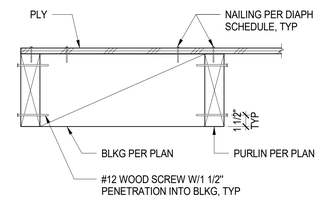

7 BLOCKING

SCALE: 1 1/2" = 1'-0"

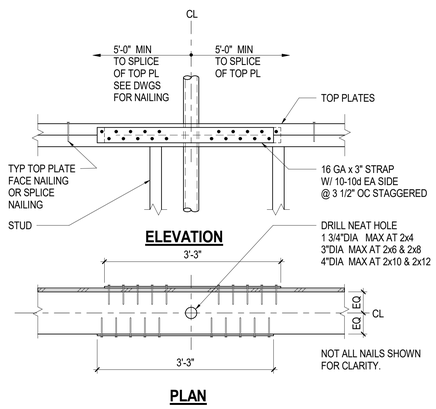

8 TOP PLATE MEP PENETRATION

SCALE: 1 1/2" = 1'-0"

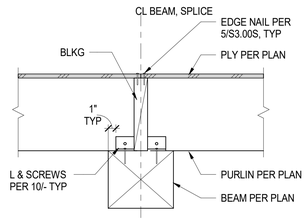

9 PURLIN SPLICE

SCALE: 1 1/2" = 1'-0"

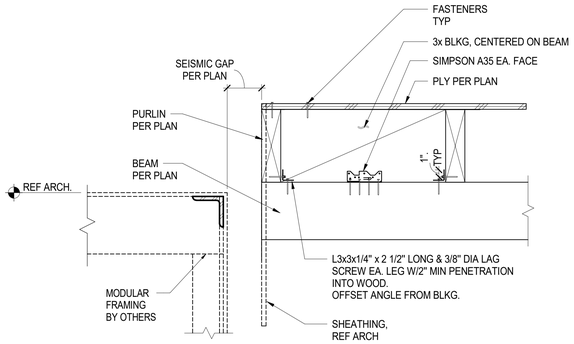

10 PURLIN-BEAM DETAIL

SCALE: 1 1/2" = 1'-0"

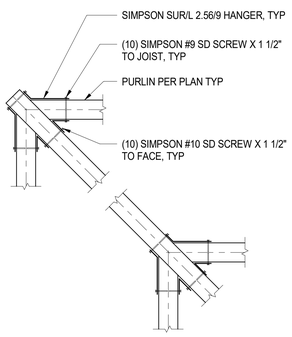

11 PURLINS AT DIRECTION CHANGE

SCALE: 1 1/2" = 1'-0"

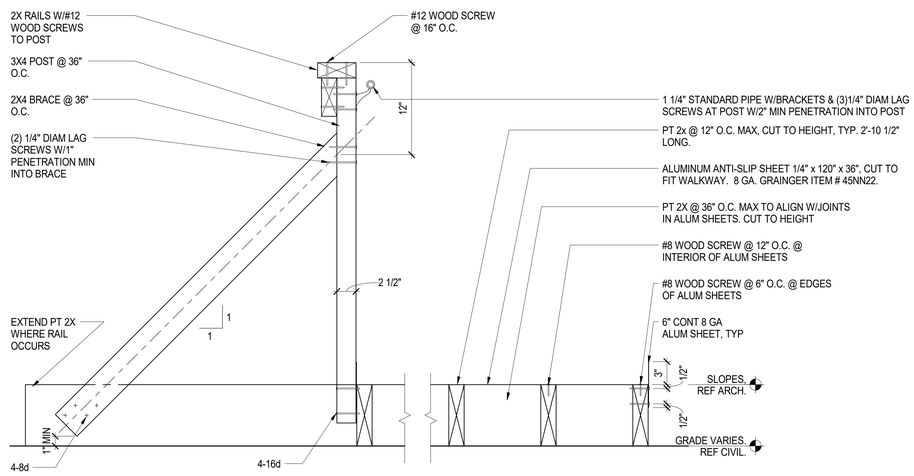

12 WALKWAY SUPPORT

SCALE: 1 1/2" = 1'-0"

IDENTIFICATION STAMP
DIV. OF THE STATE ARCHITECT
APP: 01-119031 INC:
REVIEWED FOR
SS ☑ FLS ☑ ACS ☑
DATE: 10/22/2020

LPAS

2484 Natomas Park Drive Suite 100 Sacramento CA 95833
916 443 0335 lpasdesign.com Architecture + Design

LAS POSITAS TEMPORARY FACULTY VILLAGE MODULAR OFFICES

LAS POSITAS COMMUNITY COLLEGE
LIVERMORE, CA

ARCHITECT'S STAMP APPROVAL

THIS DOCUMENT CONTAINS INFORMATION THAT IS PROPRIETARY TO LPAS, INC. AND IS FURNISHED FOR THE PURPOSES OF REVIEW, BIDDING OR CONSTRUCTION OF THE PROJECT LISTED IN THE JOB TITLE BOX ABOVE AND SHALL NOT BE USED FOR ANY OTHER PURPOSE OR RELEASED TO ANY OTHER PARTY WITHOUT THE WRITTEN CONSENT OF LPAS, INC. INFORMATION CONTAINED HEREIN IS AN INSTRUMENT OF PROFESSIONAL SERVICES AND SHALL REMAIN THE PROPERTY OF LPAS, INC. ALL RIGHTS RESERVED COPYRIGHT © 2009.

THIS DRAWING IS NOT FINAL OR TO BE USED FOR CONSTRUCTION UNTIL IT IS SIGNED BY THE ARCHITECT AND ENGINEER.

Thornton Tomasetti
Thornton Tomasetti, Inc.
650 California St., 14th Floor
San Francisco, CA 94108
T 415.365.6900 F 415.365.6901

REGISTERED PROFESSIONAL ENGINEER JUSTIN D. FAHEY S 4833 STRUCTURAL STATE OF CALIFORNIA

TITLE:

TYPICAL WOOD DETAILS

PROJECT NO: U20003.00

DATE: 08/28/2020

SHEET NO:

S3.01S

FOR CONSTRUCTION

PLUMBING SYMBOL LIST

NOTE: This is a standard symbol list and not all items listed may be used.

Abbreviations

#	NUMBER
&	AND
(A)	ABANDON IN PLACE
(E)	EXISTING
(F)	FUTURE
(N)	NEW
(R)	RELOCATE / RELOCATED LOCATION
(X)	DEMOLISH
@	AT
'	FOOT, FEET
A	AQUASTAT, ARCHITECT, ANCHOR, AMPHERE
AFF	ABOVE FINISHED FLOOR
AP	ACCESS PANEL
BFF	BELOW FINISHED FLOOR
BFP	BACKFLOW PREVENTER
BLDG	BUILDING
BTUH	BRITISH THERMAL UNITS PER HOUR
CD	CONDENSATE DRAIN
CFH	CUBIC FEET PER HOUR
CFS	CUBIC FEET PER SECOND
CO	CLEANOUT
CONT.	CONTINUATION
CV	CHECK VALVE
CW	COLD WATER
D	DRAIN
DCVA	DOUBLE CHECK VALVE ASSEMBLY
DET	DOMESTIC EXPANSION TANK
DF	DRINKING FOUNTAIN
DFU	DRAINAGE FIXTURE UNIT
DN	DOWN
DS	DOWNSPOUT
DSN	DOWNSPOUT NOZZLE
DW	DISHWASHER, DOMESTIC WATER
DWV	DRAINAGE, WASTE AND VENT
EWC	ELECTRIC WATER COOLER
EWH	ELECTRIC WATER HEATER
F	FIRE, FAHRENHEIT
FCO	FLOOR CLEANOUT
FD	FLOOR DRAIN
FFE	FINISHED FLOOR ELEVATION
FL	FLOOR
FT	FEET
FV	FLUSH VALVE
GPM	GALLONS PER MINUTE
GWH	GAS WATER HEATER
HB	HOSE BIBB
HVAC	HEATING, VENTILATING AND AIR CONDITIONING
HW	HOT WATER
HWFU	HOT WATER FIXTURE UNIT
HWR	HOT WATER RETURN
HZ	HERTZ
IN, "	INCHES
INV	INVERT ELEVATION
IW	INDIRECT WASTE
L	LAVATORY
MIN	MINIMUM
MS	MOP SINK
MX	MIXING VALVE
N	NORTH
NIC	NOT IN CONTRACT
NO.	NUMBER
NTS	NOT TO SCALE
OD	OVERFLOW DRAIN, OUTSIDE DIAMETER
OFCI	OWNER FURNISHED, CONTRACTOR INSTALLED
OFOI	OWNER FURNISHED, OWNER INSTALLED
P	PLUMBING, PUMP
PD	PRESSURE DROP, PLUMBING DEMOLITION, PUMPED DISCHARGE
PLBG	PLUMBING
POC	POINT OF CONNECTION
PRV	PRESSURE REDUCING VALVE
PSI	POUNDS PER SQUARE INCH
QTY	QUANTITY
RD	ROOF DRAIN
RPBP	REDUCED PRESSURE BACKFLOW PREVENTER
RWL	RAINWATER LEADER
S, SK	SINK
SA	SHOCK ARRESTOR
SAN	SANITARY
SB	SERVICE BOX
SD	STORM DRAIN
SF	SQUARE FEET
SHT	SHEET
SOV	SHUT OFF VALVE
SP	SUMP PUMP, STATIC PRESSURE
TEMP	TEMPERATURE
TP	TRAP PRIMER, TOTAL PRESSURE
TYP	TYPICAL
U, UR	URINAL
V	VACUUM, VENT, VOLT
VTR	VENT THRU ROOF
W/	WITH
W	WASTE
WC	WATER COLUMN, WATER CLOSET
WCO	WALL CLEANOUT
WH	WATER HEATER, WALL HYDRANT
WHA	WATER HAMMER ARRESTOR
WSFU	WATER SUPPLY FIXTURE UNIT

General

- DEMOLISH
- EXISTING WORK
- NEW WORK
- PIPE OR CONDUIT BELOW GRADE
- CONTINUATION
- XX-X LOCATION — EQUIPMENT IDENTIFICATION
- EXTENT OF DEMOLITION
- X — FIXTURE TAG (LEVEL BELOW FIXTURE)
- X — KEYED NOTE
- POINT OF CONNECTION

Piping Fittings

- AP — ACCESS PANEL
- AQUASTAT
- BLIND FLANGE
- CAP
- COTG — CLEANOUT TO GRADE
- CONCENTRIC REDUCER
- DSN — DOWNSPOUT NOZZLE
- ECCENTRIC REDUCER
- FCO — FLOOR CLEANOUT
- FD — FLOOR DRAIN
- FS — FLOOR SINK
- FLOW DIRECTION
- HOSE BIBB / WALL HYDRANT
- OD — OVERFLOW ROOF DRAIN
- PIPE DROP
- PIPE RISE
- PUMP
- RD — ROOF DRAIN
- SHOCK ABSORBER / WATER HAMMER ARRESTOR
- STRAINER
- T&P RELIEF VALVE WITH PIPE TO DRAIN
- TEE DOWN ON PIPE
- TEE UP ON PIPE
- VTR — VENT THROUGH ROOF
- WCO — WALL CLEANOUT

Piping Systems

- COLD WATER PIPING
- D — CONDENSATE / INDIRECT DRAIN PIPING
- HOT WATER PIPING
- HOT WATER RETURN PIPING
- 2#G — NATURAL GAS PIPING, 2 LB
- G — NATURAL GAS PIPING, 7" WC PRESSURE
- OD — OVERFLOW DRAIN PIPING ABOVE GRADE OR FINISHED FLOOR
- SANITARY VENT PIPING
- SANITARY WASTE OR SOIL PIPING ABOVE GRADE OR FINISHED FLOOR
- SANITARY WASTE OR SOIL PIPING BELOW GRADE OR FINISHED FLOOR
- SD — STORM DRAIN PIPING ABOVE GRADE OR FINISHED FLOOR
- SD — STORM DRAIN PIPING BELOW GRADE OR FINISHED FLOOR
- TP — TRAP PRIMER PIPING

Valves

- BFP — BACKFLOW PREVENTER
- CHECK VALVE
- SHUTOFF VALVE, GENERAL

GENERAL PLUMBING NOTES

A. ALL WORK UNDER THIS CONTRACT SHALL CONFORM TO THE CURRENT STATE, COUNTY AND NATIONAL CODES AND STANDARDS ADOPTED BY THE LOCAL JURISDICTIONS INCLUDING APPLICABLE AMENDMENTS.

B. CONDITIONS SHOW ON THE PLANS RELATIVE TO THE WORK TO BE PERFORMED ARE BASED ON THE BEST INFORMATION AVAILABLE AND SUBJECT TO VERIFICATION. VERIFY LOCATIONS AND ELEVATIONS OF UTILITIES TO BE CROSSED OR CONNECTED. CORRECT DEFICIENCIES CAUSED BY FAILURE TO PERFORM SUCH VERIFICATIONS AT NO EXPENSE TO OWNER. IMMEDIATELY NOTIFY ARCHITECT AND ENGINEER OF CONDITION IN CONFLICT WITH THE DETAILS/PLANS.

C. COORDINATE INSTALLATION OF PIPING, BELOW AND ABOVE GRADE WITH STRUCTURAL COMPONENTS AND OTHER SYSTEMS INSTALLATION.

D. COORDINATE PIPE ROUGH-IN/CONNECTION LOCATIONS WITH ARCHITECTURAL DRAWINGS.

E. LOCATE VALVES FOR SERVICE ACCESSIBILITY. VERIFY IN THE FIELD THE MAIN VALVE FOR WATER.

F. ALL WASTE PIPE TO SLOPE MINIMUM OF 1/4" PER FOOT.

G. PROVIDE WATER HAMMER ARRESTERS TO DOMESTIC WATER LINES SERVING QUICK ACTING VALVES, SEE MODULAR DRAWINGS.

H. PERMANENT VACUUM BREAKERS SHALL BE INCLUDED IN ALL HOSE BIBS.

I. DRAINAGE PIPING SERVING FIXTURES THAT ARE LOCATED BELOW THE ELEVATION OF THE NEXT UPSTREAM MANHOLE SHALL BE PROVIDED WITH A BACKWATER VALVE. FIXTURES ABOVE THAT LEVEL SHALL NOT DISCHARGE THROUGH THIS VALVE.

J. INDIRECT WASTE SHALL DISCHARGE TO THE BUILDING DRAINAGE THROUGH AN APPROVED AIR GAP OR AIR BREAK WITH A MINIMUM 1" DISTANCE FROM THE LOWEST POINT OF INDIRECT PIPE TO THE FLOOD LEVEL RIM OF THE RECEPTOR.

K. DRYWELL SHALL BE PROVIDED FOR CONDENSATE FROM MECHANICAL UNITS OUTSIDE THE BUILDING.

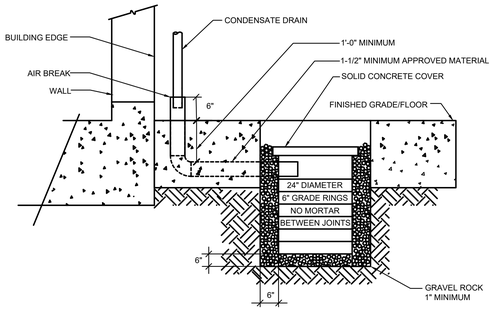

TONS OF COOLING	NO. OF GRADE RINGS REQUIRED
30	2 MINIMUM
60	4
90	6
120	8
150	10
180	12

DRAIN PIPE SIZE	TONS OF COOLING
3/4"	1 TO 20
1"	21 TO 40
1-1/4"	41 TO 90
1-1/2"	91 TO 125
2"	126 TO 250

1 DRYWELL DETAILS

NO SCALE

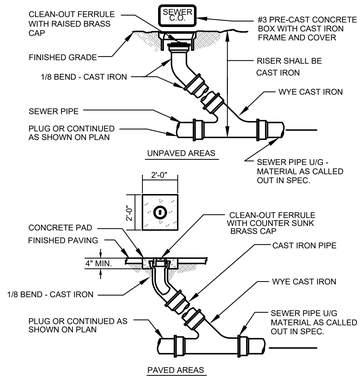

2 CLEANOUT TO GRADE (CAST IRON) DETAIL

NO SCALE

SHEET INDEX

P0.10 SYMBOLS LIST AND GENERAL NOTES - PLUMBING

P1.10 SITE PLAN - PLUMBING

IDENTIFICATION STAMP
DIV. OF THE STATE ARCHITECT
APP: 01-119031 INC:
REVIEWED FOR
SS ☑ FLS ☑ ACS ☑
DATE: 10/22/2020

LPAS

2484 Natomas Park Drive Suite 100 Sacramento CA 95833
916 443 0335 lpasdesign.com Architecture + Design

LAS POSITAS TEMPORARY FACULTY VILLAGE MODULAR OFFICES

LAS POSITAS COMMUNITY COLLEGE
LIVERMORE, CA

ARCHITECT'S STAMP APPROVAL

THIS DOCUMENT CONTAINS INFORMATION THAT IS PROPRIETARY TO LPAS, INC. AND IS FURNISHED FOR THE PURPOSES OF REVIEW, BIDDING OR CONSTRUCTION OF THE PROJECT LISTED IN THE JOB TITLE BOX ABOVE AND SHALL NOT BE USED FOR ANY OTHER PURPOSE OR RELEASED TO ANY OTHER PARTY WITHOUT THE WRITTEN CONSENT OF LPAS, INC. INFORMATION CONTAINED HEREIN IS AN INSTRUMENT OF PROFESSIONAL SERVICES AND SHALL REMAIN THE PROPERTY OF LPAS, INC. ALL RIGHTS RESERVED COPYRIGHT © 2009.

THIS DRAWING IS NOT FINAL OR TO BE USED FOR CONSTRUCTION UNTIL IT IS SIGNED BY THE ARCHITECT AND ENGINEER.

CONSULTANT

REGISTERED PROFESSIONAL ENGINEER GEORGE ERNAIZ EDPALINA No. M38226 CIVIL STATE OF CALIFORNIA

Date Signed: 9/24/20

INTERFACE ENGINEERING
PROJECT: 2020-0001
CONTACT: George Edpalina
135 Main Street, Suite 400
San Francisco, CA 94105
TEL: 415.489.7240
www.interfaceengineering.com

SYMBOL LIST, GENERAL NOTES - PLUMBING

PROJECT NO: 2020-0001

DATE: 2020-08-28

SHEET NO:

P0.10

FOR CONSTRUCTION

PLUMBING SHEET KEYNOTES

1. TERMINATE 3/4" CONDENSATE FROM MECHANICAL UNIT(S) TO DRYWELL. SEE MODULAR DRAWING FOR EXACT UNIT/CONDENSATE LOCATION.

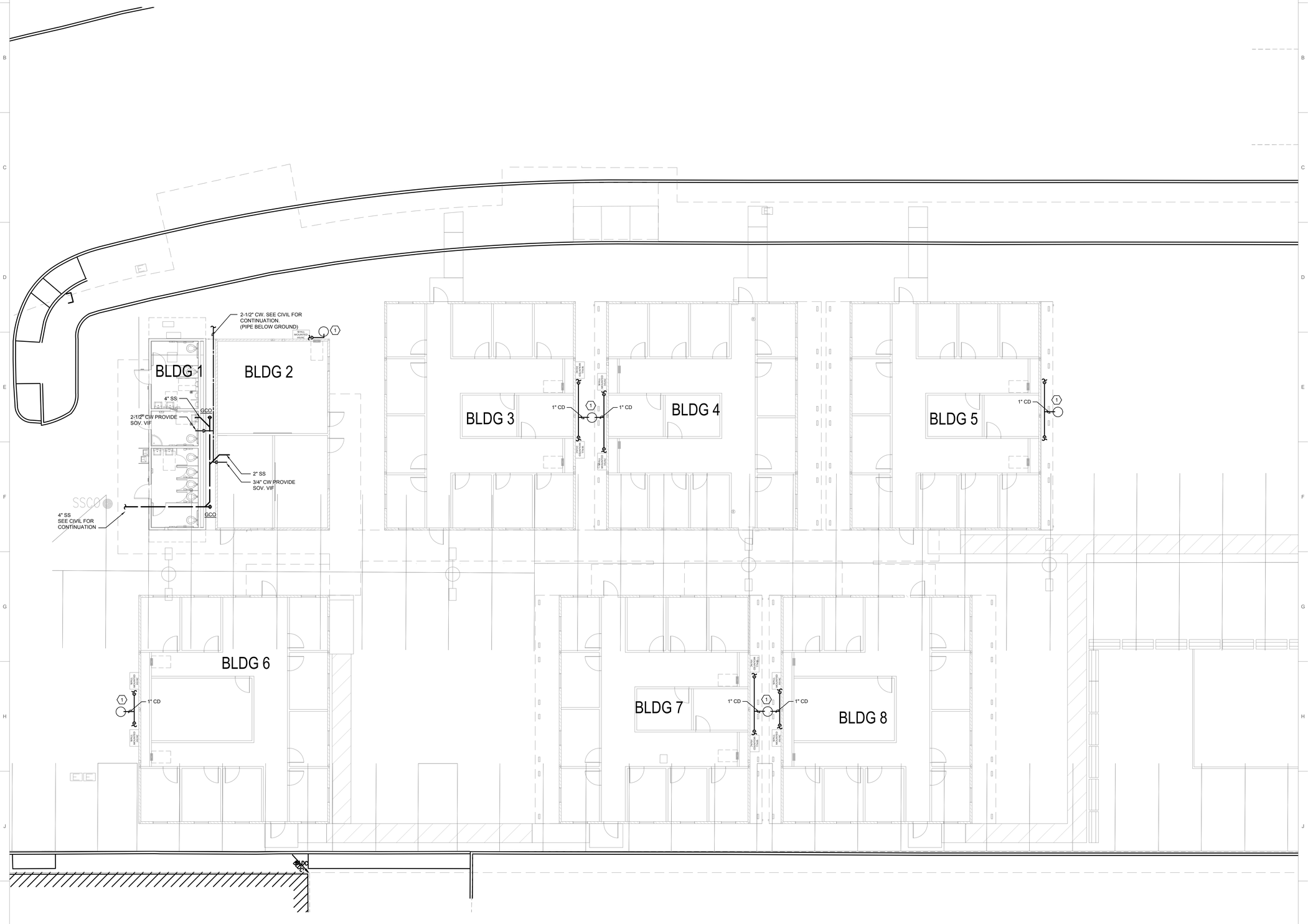

1 SITE PLAN - PLUMBING

0 4' 8' 16'

SCALE: 1/8"=1'-0"

IDENTIFICATION STAMP
DIV. OF THE STATE ARCHITECT
APP: 01-119031 INC:
REVIEWED FOR
SS ☑ FLS ☑ ACS ☑
DATE: 10/22/2020

LPAS

2484 Natomas Park Drive Suite 100 Sacramento CA 95833
916 443 0335 lpasdesign.com Architecture + Design

LAS POSITAS
TEMPORARY FACULTY
VILLAGE MODULAR
OFFICES

LAS POSITAS COMMUNITY COLLEGE
LIVERMORE, CA

ARCHITECT'S STAMP APPROVAL

THIS DOCUMENT CONTAINS INFORMATION THAT IS PROPRIETARY TO LPAS, INC. AND IS FURNISHED FOR THE PURPOSES OF REVIEW, BIDDING OR CONSTRUCTION OF THE PROJECT LISTED IN THE JOB TITLE BOX ABOVE AND SHALL NOT BE USED FOR ANY OTHER PURPOSE OR RELEASED TO ANY OTHER PARTY WITHOUT THE WRITTEN CONSENT OF LPAS, INC. INFORMATION CONTAINED HEREIN IS AN INSTRUMENT OF PROFESSIONAL SERVICES AND SHALL REMAIN THE PROPERTY OF LPAS, INC. ALL RIGHTS RESERVED COPYRIGHT © 2009.

THIS DRAWING IS NOT FINAL OR TO BE USED FOR CONSTRUCTION UNTIL IT IS SIGNED BY THE ARCHITECT AND ENGINEER.

CONSULTANT

REGISTERED PROFESSIONAL ENGINEER GEORGE KRNAZ EDPALINA No. M38226 STATE OF CALIFORNIA

Date Signed: 8/27/20

INTERFACE ENGINEERING
PROJECT 2020-0001
CONTACT George Edpalina
135 Main Street, Suite 400
San Francisco, CA 94105
TEL 415.489.7240
www.interfaceengineering.com

SITE PLAN - PLUMBING

PROJECT NO: 2020-0001

DATE: 2020-08-28

SHEET NO:

P1.10

FOR CONSTRUCTION

ELECTRICAL SYMBOL LIST

NOTE: This is a standard symbol list and not all items listed may be used.

Abbreviations

(E)	EXISTING
(R)	RELOCATE
(X)	DEMOLISH
A	AMPERES, AMBER
AFF	ABOVE FINISHED FLOOR
AHJ	AUTHORITY HAVING JURISDICTION
AIC	AVAILABLE INTERRUPTING CAPACITY
ANSI	AMERICAN NATIONAL STANDARDS INSTITUTE
AWG	AMERICAN WIRE GAUGE
BAS	BUILDING AUTOMATION SYSTEM
C	CONDUIT, CLOSE, CONTROL
CA	CABLE
CAT	CATEGORY
CLG	CEILING
COORD	COORDINATE
CU	COPPER
dB	DECIBEL
DIA	DIAMETER
DIM	DIMENSION
DIV	DIVISION
DN	DOWN
DTL	DETAIL
DWG	DRAWING
E	EMERGENCY
EA	EACH
EF	EXHAUST FAN
EL	ELEVATION
EMT	ELECTRICAL METALLIC TUBING
FA	FIRE ALARM
FBO	FURNISHED BY OTHERS
FMC	FLEXIBLE METAL CONDUIT
FT	FOOT, FEET
G, GND	GROUND
GFCI	GROUND FAULT CIRCUIT INTERRUPTER
GFI	GROUND FAULT INTERRUPTER
GFP	GROUND FAULT PROTECTION
HT	HEIGHT
ID	IDENTIFICATION
IEEE	INSTITUTE OF ELECTRICAL AND ELECTRONICS ENGINEERS
IG	ISOLATED GROUND
IN	INCH, INCHES
KV	KILOVOLT
KVA	KILOVOLT AMPERES
KW	KILOWATT
LED	LIGHT EMITTING DIODE
LFMC	LIQUIDTIGHT FLEXIBLE METAL CONDUIT
LSI	(L) OVERLOAD PROTECTION, (S) SHORT CIRCUIT PROTECTION LOW LEVEL FAULT. (I) SHORT CIRCUIT PROTECTION HIGH LEVEL FAULT.
LV	LOW VOLTAGE
MCA	MINIMUM CIRCUIT AMPS
MCC	MOTOR CONTROL CENTER
MIN	MINIMUM
MISC	MISCELLANEOUS
MOCP	MAXIMUM OVERCURRENT PROTECTION
MT, MTD	MOUNT, MOUNTED
N.I.C.	NOT IN CONTRACT
N/A	NOT APPLICABLE
N	NEUTRAL
NEC	NATIONAL ELECTRIC CODE
NEMA	NATIONAL ELECTRICAL MANUFACTURERS ASSOCIATION
NESC	NATIONAL ELECTRIC SAFETY CODE
NTS	NOT TO SCALE
OC	ON CENTER
OFCI	OWNER FURNISHED, CONTRACTOR INSTALLED
PH	PHASE
PNL	PANEL
PVC	POLY-VINYL-CHLORIDE
PWR	POWER
QTY	QUANTITY
REQD	REQUIRED
RFI	REQUEST FOR INFORMATION
RM	ROOM
RMC	RIGID METAL CONDUIT
SHT	SHEET
SPD	SURGE PROTECTION DEVICE
STD	STANDARD
SWBD	SWITCHBOARD
TBD	TO BE DETERMINED
TGB	TELECOMMUNICATIONS GROUNDING BUS BAR
TTB	TELEPHONE TERMINAL BOARD
TVSS	TRANSIENT VOLTAGE SURGE SUPPRESSOR
TYP	TYPICAL
UL	UNDERWRITERS LABORATORIES
UON	UNLESS OTHERWISE NOTED
UPS	UNINTERRUPTIBLE POWER SUPPLY
V	VOLTS, VOLTAGE
W/	WITH
W/O	WITHOUT
WP	WEATHERPROOF
XFMR	TRANSFORMER

Connections / Equipment

F	HEAVY DUTY FUSED DISCONNECT SWITCH
T	TRANSFORMER

General

	EXISTING WORK
	NEW WORK
X / X	DETAIL NUMBER AND SHEET LOCATION
1	KEYED NOTE

Lighting

	SURFACE OR PENDANT MOUNTED 1' X 4' LUMINAIRE WITH INTEGRAL EMERGENCY BATTERY CONNECTED TO UNSWITCHED CIRCUIT

Miscellaneous

#10 B-27,29,31.	BRANCH CIRCUIT WIRING. ARROW INDICATES HOME RUN TO PANEL WITH CIRCUITS AS NOTED. WIRE SIZE IS #12 AWG MINIMUM UNLESS NOTED OTHERWISE. SHORT TICK MARKS INDICATE PHASE CONDUCTORS. LONG TICK MARKS INDICATE NEUTRAL CONDUCTORS. A SINGLE CURVED TICK MARK INDICATES INSULATED GREEN GROUND CONDUCTOR. SECOND CURVED TICK MARK INDICATES "ISOLATED GROUND" (GREEN INSULATION WITH YELLOW STRIPE) CONDUCTOR.
	BRANCH PANEL
	CIRCUIT BREAKER
	DRY TYPE TRANSFORMER
	FLUSH WALL MOUNTED BRANCH PANEL
GB	GROUND BAR
	MAIN DISTRIBUTION PANEL / SUB DISTRIBUTION PANEL

Raceways

	CONDUIT CONCEALED IN WALL OR CEILING SPACE
	CONDUIT ROUTED BELOW FLOOR / GRADE
	CONDUIT ELLED DOWN
	CONDUIT ELLED UP
	CONDUIT/WIRING CONTINUATION
	CONDUIT/WIRING STUBBED OUT WITH END CAP OR INSULATED PLASTIC BUSHING
	FLEXIBLE CONDUIT
G	GROUND ROD WITH A GROUND WELL
PB	PULL BOX

Switches and Receptacles

PE	PHOTO ELECTRIC SWITCH D = CONTINUOUS DIMMING PHOTOCELL S = SWITCHED PHOTOCELL

GENERAL ELECTRICAL NOTES

A. DO NOT COMMENCE INSTALLATION OF ELECTRICAL SYSTEMS AND EQUIPMENT WITHOUT RELATED SHOP DRAWING APPROVALS.

B. ELECTRICAL CIRCUITS SHALL BE INTERRUPTED ONLY WITH PRIOR WRITTEN CONSENT. SUCH INTERRUPTIONS SHALL BE PRECEDED BY ALL POSSIBLE PREPARATIONS BY THE CONTRACTOR WHICH ARE NECESSARY TO KEEP THE ELECTRICAL CIRCUITS OFF FOR A MINIMUM PERIOD IN AN EXPEDITIOUS MANNER PURSUANT WITH GOOD WORKMANSHIP. THIS INCLUDES CIRCUIT TRACING TO IDENTIFY THE ELECTRICAL LOAD BEING SERVED AND THE ORIGIN OF THE CIRCUIT.

C. COORDINATE WITH OWNER SO THAT WORK CAN BE SCHEDULED NOT TO INTERRUPT OPERATIONS, NORMAL ACTIVITIES, BUILDING ACCESS, ACCESS TO DIFFERENT AREAS. THE OWNER WILL COOPERATE TO THE BEST OF THEIR ABILITY TO ASSIST IN A COORDINATED SCHEDULE, BUT WILL REMAIN THE FINAL AUTHORITY AS TO TIME OF WORK PERMITTED.

D. COORDINATE THE EXACT LOCATION OF EXISTING UTILITIES AND EQUIPMENT PRIOR TO COMMENCEMENT OF WORK. COMPENSATE THE OWNER FOR DAMAGES CAUSED BY THE FAILURE TO LOCATE AND PRESERVE UTILITIES. REPLACE DAMAGED ITEMS WITH NEW MATERIAL TO MATCH EXISTING.

E. REMOVE EXISTING LUMINAIRES, SWITCHES, RECEPTACLES, AND OTHER ELECTRICAL EQUIPMENT AND DEVICES AND ASSOCIATED WIRING FROM WALLS, CEILINGS, FLOORS, AND OTHER SURFACES SCHEDULED FOR REMODELING, RELOCATION, OR DEMOLITION UNLESS SHOWN AS RETAINED OR RELOCATED ON DRAWINGS.

F. MAINTAIN ELECTRICAL CONTINUITY OF EXISTING SYSTEMS. REMOVE OR RELOCATE ELECTRICAL BOXES, CONDUIT, WIRING, EQUIPMENT, LUMINAIRES, AND THE LIKE, AS REQUIRED IN REMOVED OR REMODELED AREAS IN THE EXISTING CONSTRUCTION AFFECTED BY THIS WORK.

G. REMOVE AND RESTORE WIRING WHICH SERVES USABLE EXISTING OUTLETS CLEAR OF THE CONSTRUCTION.

H. IF EXISTING JUNCTION BOXES WILL BE MADE INACCESSIBLE, OR IF ABANDONED OUTLETS SERVE AS FEED THROUGH BOXES FOR OTHER EXISTING ELECTRICAL EQUIPMENT WHICH IS BEING RETAINED, PROVIDE NEW CONDUIT AND WIRE TO BYPASS THE ABANDONED OUTLETS.

I. IF EXISTING CONDUITS PASS THROUGH PARTITIONS OR CEILING WHICH ARE BEING REMOVED OR REMODELED, PROVIDE NEW CONDUIT AND WIRE TO REROUTE CLEAR OF THE CONSTRUCTION AND MAINTAIN SERVICE TO THE EXISTING LOAD.

J. CONCEALED CONDUIT LOCATED IN CONCRETE WALLS OR HARDBOARD CEILING SPACES MAY BE ABANDONED IN PLACE. REMOVE CONDUCTORS AND TAG ABANDONED CONDUITS WITH CORRESPONDING SYSTEM AND TERMINATION POINT. CUT AND CAP ABANDONED CONDUIT. DO NOT EXTEND STUBS ABOVE FINISHED FLOOR.

K. EXTEND CIRCUITING AND DEVICES IN EXISTING WALLS TO BE FURRED OUT.

L. PROVIDE TEMPORARY SUPPORT FOR ELECTRICAL SYSTEMS THAT REMAIN IN PLACE.

M. VERIFY EXACT LOCATION AND NUMBER OF EXISTING LUMINAIRES IN THE FIELD. LOCATIONS OF ITEMS SHOWN ON DRAWINGS AS EXISTING ARE PARTIALLY BASED ON RECORD AND OTHER DRAWINGS WHICH MAY CONTAIN ERRORS. VERIFY THE ACCURACY OF THE INFORMATION SHOWN PRIOR TO BIDDING AND PROVIDE SUCH LABOR AND MATERIAL AS IS NECESSARY TO ACCOMPLISH THE INTENT OF THE CONTRACT DOCUMENTS.

N. EXISTING LIGHTING WHICH IS TO REMAIN OR BE RELOCATED IS TO BE RELAMPED, REBALLASTED, AND CLEANED. LEAVE ALL LUMINAIRES IN PROPER WORKING ORDER. REPLACE DAMAGED OR BROKEN LENS AND/OR COMPONENTS.

O. MAINTAIN ACCESS TO EXISTING ELECTRICAL INSTALLATIONS WHICH REMAIN ACTIVE. MODIFY INSTALLATION OR PROVIDE ACCESS PANEL AS APPROPRIATE.

P. WHERE DRAWINGS INDICATE EXISTING ELECTRICAL EQUIPMENT OR DEVICES TO BE RELOCATED AND/OR REUSED, REFURBISH THEM. THOROUGHLY CLEAN SUCH ITEMS. NOTIFY ARCHITECT OF ANY DEFECTS IN SUCH INSTALLATIONS. REPAIR ANY DAMAGE CAUSED BY DEMOLITION OR CONSTRUCTION PERFORMED UNDER THIS CONTRACT.

Q. RECONNECT EXISTING LUMINAIRES NOT SHOWN ON DRAWINGS AND AFFECTED DUE TO DEMOLITION TO NEAREST AVAILABLE EXISTING LIGHTING CIRCUIT ABLE TO TAKE THE ADDITIONAL LOAD.

R. RECONNECT EXISTING LUMINAIRES NOT SHOWN ON DRAWINGS AND AFFECTED DUE TO DEMOLITION TO NEAREST AVAILABLE EXISTING LIGHTING CIRCUIT ABLE TO TAKE THE ADDITIONAL LOAD.

S. PROVIDE SUITABLE ANCHORAGE AND SUPPORT FOR ELECTRICAL EQUIPMENT IN RATED WALLS, SLABS AND CEILINGS. MOUNT DEVICES AND RACEWAYS IN ACCORDANCE WITH ESTABLISHED CODES AND SPECIFICATIONS.

T. REFER TO SPECIFICATIONS FOR ADDITIONAL REQUIREMENTS.

U. DRAWINGS AND SPECIFICATIONS COMPLEMENT EACH OTHER. REQUIREMENT BY EITHER INFERS REQUIREMENT BY BOTH.

V. CONNECT EQUIPMENT AND DEVICES FURNISHED UNDER OTHER DIVISIONS OF THIS CONTRACT, BY OWNER OR BY OTHER CONTRACTS.

W. UNLESS OTHERWISE NOTED, PROVIDE CONCEALED AND FLUSH MOUNTED INSTALLATION OF DEVICES AND EQUIPMENT IN AREAS.

X. PROVIDE SEPARATE EQUIPMENT GROUNDING CONDUCTOR IN 120 VOLT, MULTI-WIRE CIRCUITS.

Y. FOR 120 VOLT, 20 AMP CIRCUITS, WHERE CIRCUIT DISTANCE FROM PANELBOARD TO FARTHEST DEVICE/FIXTURE EXCEEDS 70 FEET, PROVIDE #10 SIZE CONDUCTOR. WHERE CIRCUIT DISTANCE FROM PANELBOARD TO FARTHEST DEVICE/FIXTURE EXCEEDS 100 FEET, PROVIDE #8 SIZE CONDUCTOR.RUN ELECTRICAL CONDUIT CONCEALED AND PARALLEL TO BUILDING LINES. VERIFY WITH ARCHITECT.

Z. RECEPTACLE OUTLETS SHALL COMPLY WITH CEC SECTIONS 210.7 AND 210.50.

AA. LIGHTS, SWITCHES AND CONTROL MECHANISMS SHALL COMPLY WITH CEC SECTION 404.

AB. BRACE ELECTRICAL EQUIPMENT TO RESIST A HORIZONTAL FORCE THAT ACT IN ANY DIRECTION. COMPLY WITH TITLE 24 REQUIREMENTS.

AC. INSTALL COMPLETE SYSTEM OF CONDUCTORS IN RACEWAY SYSTEM THROUGHOUT BUILDING FOR FEEDERS, BRANCH CIRCUITS, ETC.

AD. DESIGN OF TEMPORARY POWER FOR CONSTRUCTION SHALL BE THE CONTRACTOR'S RESPONSIBILITY. REMOVE TEMPORARY POWER PRIOR TO COMPLETION OF PROJECT.

AE. PROVIDE UNSWITCHED HOT CONDUCTOR TO EMERGENCY BALLAST/DRIVER OF SWITCHED LUMINAIRES TO PREVENT SWITCHOVER TO BATTERY OPERATION WHEN LUMINAIRES ARE SWITCHED TO THE OFF POSITION.

AF. ALL WORK ON SERVICE CONDUCTORS, FEEDERS, AND OTHER SUCH EQUIPMENT SHALL BE DONE ONLY WHEN SUCH CONDUCTORS, FEEDERS, AND EQUIPMENT ARE DE-ENERGIZED. THE CONTRACTOR SHALL HAVE AN "ELECTRICAL SAFETY AND LOCK-OUT/TAG-OUT PROCEDURE" IN PLACE PRIOR TO COMMENCEMENT OF WORK.

AG. MINIMUM SIZE FOR EXTERIOR BELOW GRADE CONDUIT SHALL BE 1".

AH. DRY-TYPE TRANSFORMERS LARGER THAN 112.5KVA ARE SPECIFIED IN COMPLIANCE WITH CEC 450.21(B) EXCEPTIONS 1 AND 2. THE 1-HOUR FIRE RATING REQUIREMENT FOR THE ROOM HOUSING THE TRANSFORMER SHALL BE EXEMPT.

AI. PROVIDE DESIGN BUILD FOR FIRE ALARM SYSTEM. FIRE ALARM DEVICES SHOWN ON PLANS ARE FOR COORDINATION PURPOSES ONLY. SUBMIT COMPLETE DRAWINGS TO THE FIRE MARSHAL FOR APPROVAL AND ASSUME FULL RESPONSIBILITY OF THE SYSTEM, DEVICE QUANTITY AND LOCATION, WIRING, PROGRAMMING AND CONTROL PANELS. COORDINATE FINAL DEVICE LOCATIONS WITH THE ARCHITECT PRIOR TO ROUGH-IN.

AJ. PROVIDE ALL BACKBOXES, FLOOR BOXES, FLOOR TRENCH DUCT, GROUNDING SYSTEM, PULL BOXES, CONDUITS, CABLING, AND CABLE TRAYS PER TELECOM/AV/SECURITY DRAWINGS AND SPECIFICATIONS. REFER TO TELECOM/AV/SECURITY DRAWINGS FOR QUANTITY AND LOCATIONS. PROVIDE ALL APPURTENANCES FOR A COMPLETE INSTALLATION.

AK. ALL AIC RATINGS SHOWN ARE MINIMUM REQUIREMENTS. COORDINATE AND UPGRADE RATINGS FOR ALL DISTRIBUTION EQUIPMENT AS PER SHORT CIRCUIT ANALYSIS RECOMMENDATIONS.

AL. ALL MECHANICAL, PLUMBING, AND ELECTRICAL COMPONENTS SHALL BE ANCHORED AND INSTALLED PER THE DETAILS ON THE DSA APPROVED CONSTRUCTION DOCUMENTS. WHERE NO DETAIL IS INDICATED, THE FOLLOWING COMPONENTS SHALL BE ANCHORED OR BRACED TO MEET THE FORCE AND DISPLACEMENT REQUIREMENTS PRESCRIBED IN THE 2019 CBC, SECTIONS 1617A.1.18 THROUGH 1617A.1.26, AND ASCE 7-10 CHAPTER 13, 26, AND 30.
1. ALL PERMANENT EQUIPMENT AND COMPONENTS.
2. TEMPORARY OR MOVEABLE EQUIPMENT THAT IS PERMANENTLY ATTACHED (E.G. HARD WIRED) TO THE BUILDING UTILITY SERVICES SUCH AS ELECTRICITY, GAS OR WATER.
3. MOVEABLE EQUIPMENT WHICH IS STATIONED IN ONE PLACE FOR MORE THAN 8 HOURS AND HEAVIER THAN 400 POUNDS ARE REQUIRED TO BE ANCHORED WITH TEMPORARY ATTACHMENTS.

AM. THE FOLLOWING MECHANICAL AND ELECTRICAL COMPONENTS SHALL BE POSITIVELY ATTACHED TO THE STRUCTURE, BUT THE ATTACHMENT NEED NOT BE DETAILED ON THE PLANS. THESE COMPONENTS SHALL HAVE FLEXIBLE CONNECTIONS PROVIDED BETWEEN THE COMPONENTS AND ASSOCIATED DUCTWORK, PIPING, AND CONDUIT.
1. COMPONENTS WEIGHING LESS THAN 400 POUNDS AND HAVE A CENTER OF MASS LOCATED 4 FEET OR LESS ABOVE THE ADJACENT FLOOR OR ROOF LEVEL THAT DIRECTLY SUPPORT THE COMPONENT.
2. COMPONENTS WEIGHTING LESS THAN 20 POUNDS, OR IN THE CASE OF DISTRIBUTED SYSTEMS, LESS THAN 5 POUNDS PER FOOT, WHICH ARE SUSPENDED FROM A ROOF OR FLOOR OR HUNG FROM A WALL.

AN. FOR THOSE ELEMENTS THAT DO NOT REQUIRE DETAILS ON THE APPROVED DRAWINGS, THE INSTALLATION SHALL BE SUBJECT TO THE APPROVAL OF THE STRUCTURAL ENGINEER OF RECORD AND THE DSA DISTRICT STRUCTURAL ENGINEER. THE PROJECT INSPECTOR WILL VERIFY THAT ALL COMPONENTS AND EQUIPMENT HAVE BEEN ANCHORED IN ACCORDANCE WITH ABOVE REQUIREMENTS.

AO. PIPING, DUCTWORK, AND ELECTRICAL DISTRIBUTION SYSTEMS SHALL BE BRACED TO COMPLY WITH THE FORCES AND DISPLACEMENTS PRESCRIBED IN ASCE 7-10 SECTION 13.3 AS DEFINED IN ASCE 7-10 SECTION 13.6.8, 13.6.7, 13.6.5.6, AND 2019 CBC, SECTIONS 1617A.1.23, 1617A.1.25, AND 1617A.1.26.

AP. THE BRACING AND ATTACHMENTS TO THE STRUCTURE SHALL BE DETAILED ON THE APPROVED DRAWINGS.

AQ. COPIES OF THE MANUAL SHALL BE AVAILABLE ON THE JOBSITE PRIOR TO THE START OF HANGING AND BRACING OF THE PIPE, DUCTWORK, AND ELECTRICAL DISTRIBUTION SYSTEMS.

SHEET INDEX

E0.10s	SYMBOLS LIST, GENERAL NOTES AND LUMINAIRE SCHEDULE - ELECTRICAL
E0.20s	TITLE 24 COMPLIANCE FORM
E0.30s	TITLE 24 COMPLIANCE FORM
E1.10s	SITE PLAN - POWER
E2.10s	FLOOR PLAN - LIGHTING
E3.10s	FLOOR PLAN - POWER
E4.10s	PANEL SCHEDULE, PARTIAL SINGLE LINE - ELECTRICAL
E5.10s	DETAILS - ELECTRICAL

LUMINAIRE SCHEDULE

TYPE	DESCRIPTION	HOUSING	SHIELDING	MOUNTING	FINISH	DRIVER/ POWER SUPPLY	LIGHT SOURCE	INPUT WATTS	VOLTAGE	MFG/CATALOG #	NOTES
A	1X4 LED COMPACT FIBERGLASS REINFORCED POLYESTER HOUSING	FIBERGLASS REINFORCED POLYESTER	HIGH IMPACT POLYCRABONATE OPTICAL LENS	SURFACE	FROSTED LENS	0-10V DIMMING	4116 LUMENS, 3500K, 80 CRI LED	32W	120V	COOPER #4VT3-LD5-4-G-120V-L835-EL10W-L840-CD1-U OR APPROVED EQUIVALENT	

NOTES:
1. THIS LUMINAIRE SCHEDULE IS NOT COMPLETE WITHOUT A COPY OF THE PROJECT MANUAL CONTAINING THE ELECTRICAL SPECIFICATIONS.
2. DIMMING CONTROL PROTOCOL (0-10VDC, LINE VOLTAGE, DALI, ETC.) COMPATIBLE WITH LIGHTING CONTROL SYSTEM AS SPECIFIED AND SHOWN ON DRAWINGS.
3. SPECIFIED MANUFACTURERS ARE APPROVED TO SUBMIT BID. INCLUSION DOES NOT RELIEVE MANUFACTURER FROM SUPPLYING PRODUCT AS DESCRIBED.
4. PROVIDE SUBMITTALS THAT INCLUDE THE LUMINAIRE, LAMP AND DRIVER INFORMATION OF EACH LUMINAIRE, WITH APPLICABLE OPTIONS CLEARLY CHECKED OR HIGHLIGHTED. SUBMITTALS NOT INCLUDING THIS INFORMATION WILL BE RETURNED AS REJECTED BY THE ENGINEER OF RECORD.
5. REMOTE DRIVERS: UL LISTED FOR THEIR APPLICATION. DRIVERS MARKED AS UL RECOGNIZED COMPONENT BUT NOT UL LISTED ARE SUBJECT TO REMOVAL AND REPLACEMENT AT NO COST TO OWNER.
6. PROVIDE COMMISSIONING OF THE LIGHTING AND LIGHTING CONTROLS IN ACCORDANCE WITH CALIFORNIA TITLE 24 LIGHTING COMMISSIONING REQUIREMENTS.

IDENTIFICATION STAMP
DIV. OF THE STATE ARCHITECT
APP: 01-119031 INC:
REVIEWED FOR
SS ☑ FLS ☑ ACS ☑
DATE: 10/22/2020

LPAS
2484 Natomas Park Drive Suite 100 Sacramento CA 95833
916 443 0335 lpasdesign.com Architecture + Design

LAS POSITAS TEMPORARY FACULTY VILLAGE MODULAR OFFICES

LAS POSITAS COMMUNITY COLLEGE
LIVERMORE, CA

ARCHITECT'S STAMP APPROVAL

THIS DOCUMENT CONTAINS INFORMATION THAT IS PROPRIETARY TO LPAS, INC. AND IS FURNISHED FOR THE PURPOSES OF REVIEW, BIDDING OR CONSTRUCTION OF THE PROJECT LISTED IN THE JOB TITLE BOX ABOVE AND SHALL NOT BE USED FOR ANY OTHER PURPOSE OR RELEASED TO ANY OTHER PARTY WITHOUT THE WRITTEN CONSENT OF LPAS, INC. INFORMATION CONTAINED HEREIN IS AN INSTRUMENT OF PROFESSIONAL SERVICES AND SHALL REMAIN THE PROPERTY OF LPAS, INC. ALL RIGHTS RESERVED COPYRIGHT © 2009.

THIS DRAWING IS NOT FINAL OR TO BE USED FOR CONSTRUCTION UNTIL IT IS SIGNED BY THE ARCHITECT AND ENGINEER.

CONSULTANT

REGISTERED PROFESSIONAL ENGINEER THOMAS B. JUN No. E19320 ELECTRICAL STATE OF CALIFORNIA
Date Signed: 8/27/20

INTERFACE ENGINEERING
PROJECT 2020-0001
CONTACT Thomas Jun
135 Main Street, Suite 400
San Francisco, CA 94105
TEL 415.489.7240
www.interfaceengineering.com

SYMBOL LIST, GENERAL NOTES, LUMINAIRE SCHEDULE - ELECTRICAL

PROJECT NO: 2020-0001
DATE: 2020-08-28

SHEET NO:
E0.10s

FOR CONSTRUCTION

STATE OF CALIFORNIA
Electrical Power Distribution
NRCC-ELC-E — CALIFORNIA ENERGY COMMISSION

CERTIFICATE OF COMPLIANCE			**NRCC-ELC-E**
This document is used to demonstrate compliance with mandatory requirements in §130.5, for electrical systems in newly constructed nonresidential, high-rise residential and hotel/motel occupancies. Additions and alterations to electrical service systems in these occupancies will also use this document to demonstrate compliance per §141.0(a) or §141.0(b)2P for alterations..			
Project Name:	TEMPORARY FACULTY VILLAGE	**Report Page:**	**(Page 1 of 4)**
Project Address:	3000 CAMPUS HILL DR	**Date Prepared:**	6/18/2020

A. GENERAL INFORMATION

01	Project Location (city)	LIVERMORE		02	Occupancy Types Within Project:		
☐ Office	☐ Retail	☐ Warehouse	☐ Hotel/Motel	☐ School	☐ Support Areas		
☐ Parking Garage	☐ High-Rise Residential	☐ Relocatable	☐ Healthcare Facilities	☐ Other (write in)	See Table I		

B. PROJECT SCOPE

This table includes electrical systems that are within the scope of the permit application.

01	02	03	04	05
Electrical Service Designation/Description	Scope of Work[1]	Rating (kVA)	Utility Provided Metering System Exception to §130.5(a) [2]	System subject to CA Elec Code Article 517 Exception to §130.5(a)and (b)
Existing	New electrical service equipment and meter	374	☐	☐
06 Demand Response Controls	Where required, demand response controls must be specified which are capable of receiving and automatically responding to at least one standards based messaging protocol which enables demand response after receiving a demand response signal. Sections §120.2, §130.1 and §130.3 and compliance documents NRCC-MCH, NRCC-LTI and NRCC-LTS will indicate when demand response controls are required.			

[1] *FOOTNOTES: Adding only new feeders and branch circuits triggers Voltage Drop 130.5(c), no other requirements from 130.5 are required.*
[2] *Applicable if the utility company is providing a metering system that indicates instantaneous kW demand and kWh for a utility-defined period.*

C. COMPLIANCE RESULTS

Results in this table are automatically calculated from data input and calculations in Tables F through I. Note: If any cell on this table says "COMPLIES with Exceptional Conditions" refer to Table D. Exceptional Conditions for guidance or see applicable Table referenced below.

01		02		03		04	05
Service Electrical Metering §130.5(a) (See Table F)	AND	Separation for Monitoring §130.5(b) (See Table G)	AND	Voltage Drop §130.5(c) (See Table H)	AND	Controlled Receptacles §130.5(d) (See Table I)	
Yes	AND	Yes	AND	Yes	AND	Yes	COMPLIES

STATE OF CALIFORNIA
Electrical Power Distribution
NRCC-ELC-E — CALIFORNIA ENERGY COMMISSION

CERTIFICATE OF COMPLIANCE			**NRCC-ELC-E**
Project Name:	TEMPORARY FACULTY VILLAGE	**Report Page:**	**(Page 4 of 4)**
Project Address:	3000 CAMPUS HILL DR	**Date Prepared:**	6/18/2020

DOCUMENTATION AUTHOR'S DECLARATION STATEMENT

I certify that this Certificate of Compliance documentation is accurate and complete.

Documentation Author Name: Thomas Jun	Documentation Author Signature:
Company: Interface Engineering Inc.	Signature Date: 2020-06-18
Address: 135 Main Street, Suite 400	CEA/ HERS Certification Identification (if applicable):
City/State/Zip: San Francisco CA 94105	Phone: 415-489-3212

RESPONSIBLE PERSON'S DECLARATION STATEMENT

I certify the following under penalty of perjury, under the laws of the State of California:
1. The information provided on this Certificate of Compliance is true and correct.
2. I am eligible under Division 3 of the Business and Professions Code to accept responsibility for the building design or system design identified on this Certificate of Compliance (responsible designer)
3. The energy features and performance specifications, materials, components, and manufactured devices for the building design or system design identified on this Certificate of Compliance conform to the requirements of Title 24, Part 1 and Part 6 of the California Code of Regulations.
4. The building design features or system design features identified on this Certificate of Compliance are consistent with the information provided on other applicable compliance documents, worksheets, calculations, plans and specifications submitted to the enforcement agency for approval with this building permit application.
5. I will ensure that a completed signed copy of this Certificate of Compliance shall be made available with the building permit(s) issued for the building, and made available to the enforcement agency for all applicable inspections. I understand that a completed signed copy of this Certificate of Compliance is required to be included with the documentation the builder provides to the building owner at occupancy.

Responsible Designer Name: Thomas Jun	Responsible Designer Signature:
Company: Interface Engineering Inc.	Date Signed: 2020-06-18
Address: 135 Main Street, Suite 400	License: E19320
City/State/Zip: San Francisco CA 94105	Phone: 415-489-3212

STATE OF CALIFORNIA
Outdoor Lighting
NRCC-LTO-E — CALIFORNIA ENERGY COMMISSION

CERTIFICATE OF COMPLIANCE			**NRCC-LTO-E**
Project Name:	TEMPORARY FACULTY VILLAGE	**Report Page:**	**(Page 3 of 7)**
Project Address:	3000 CAMPUS HILL DR	**Date Prepared:**	6/18/2020

F. OUTDOOR LIGHTING FIXTURE SCHEDULE

For new or altered lighting systems demonstrating compliance with §140.7 all new luminaires being installed and any existing luminaires remaining or being moved within the spaces covered by the permit application are included in the Table below. For altered lighting systems using the Existing Power method per §141.0(b)2L only new luminaires being installed and replacement luminaires being installed as part of the project scope are included (ie, existing luminaires remaining or existing luminaires being moved are not included).

Designed Wattage:

01	02		03	04	05	06	07	08	09	10	
Name or Item Tag	Complete Luminaire Description		Watts per luminaire[1, 2]	How is Wattage determined	Total number luminaires [2]	Luminaire Status[3]	Excluded per §140.7(a)	Design Watts	Cutoff Req. > 6,200 initial lumen output §130.2(b) [4]	Field Inspector	
										Pass	Fail
A	A	☐ Linear	32	Mfr. Spec	4	New	☐	128	NA: < 6200 lumens	☐	☐
							Total Design Watts:	128			

* NOTES: Selections with a * require a note in the space below explaining how compliance is achieved.
EX: Luminaire is lighting a statue; EXCEPTION 2 to §130.2(b)

[1] *FOOTNOTES: Authority Having Jurisdiction may ask for Luminaire cut sheets to confirm wattage used for compliance per §130.0(c)*
[2] *For linear luminaires, wattage should be indicated as W/lf instead of Watts/luminaire. Total linear feet should be indicated in column 05 instead of number of luminaires.*
[3] *Select "New" for new luminaires in a new outdoor lighting project, or for added luminaires in an alteration. Select "Altered" for replacement luminaires in an alteration. Select "Existing to Remain" for existing luminaires within the project scope that are not being altered and are remaining. Select "Existing Reinstalled" for existing luminaires which are being removed and reinstalled as part of the project scope.*
[4] *Compliance with mandatory cutoff requirements is required for luminaires with initial lumen output >= 6,200 unless exempted by §130.2(b)*

G. CUTOFF REQUIREMENTS (BUG)

This section does not apply to this project.

STATE OF CALIFORNIA
Electrical Power Distribution
NRCC-ELC-E — CALIFORNIA ENERGY COMMISSION

CERTIFICATE OF COMPLIANCE			**NRCC-ELC-E**
Project Name:	TEMPORARY FACULTY VILLAGE	**Report Page:**	**(Page 2 of 4)**
Project Address:	3000 CAMPUS HILL DR	**Date Prepared:**	6/18/2020

D. EXCEPTIONAL CONDITIONS

This table is auto-filled with uneditable comments because of selections made or data entered in tables throughout the form.

E. ADDITIONAL REMARKS

This table is includes remarks made by the permit applicant to the Authority Having Jurisdiction.

F. SERVICE ELECTRICAL METERING

This table includes new or replacement electrical service systems OR equipment to demonstrate compliance with §130.5(a)

01	02	03				04	05	
Electrical Service Designation/Description	Rating (kVA)	Required Metering Capabilities per Table 130.5-A				Location of Requirements in Construction Documents	Field Inspector	
		Instantaneous Demand (kW)	Historical Peak Demand (kW)	Tracking kWh for user-defined period	kWh per rate period		Pass	Fail
Existing	374	☒	☒	☒	☐	E2.10	☐	☐

G. SEPARATION OF ELECTRICAL CIRCUITS FOR ENERGY MONITORING

This table includes entirely new or complete replacement electrical power distribution systems to demonstrate compliance with §130.5(b). Any load types that are not included in the service do not need to be shown.

01	02	03	04	05	
Load Type per Table 130.5-B [1]	Minimum Required Separation of Load per Table 130.5-B	Compliance Method[2]	Location of Requirements in Construction Documents	Field Inspector	
				Pass	Fail
Existing					

* *NOTES: If "Other*" is selected under Compliance Method above, please indicate how compliance has been achieved in the space provided below.*

[1] *FOOTNOTES: For each separate load type, up to 10% of the connected load may be of any type.*
[2] *Method 1: Switchboards/ motor control centers/ panelboard loads disaggregated for each load type.*
Method 2: Switchboards/ motor control centers/ panelboard supply other distribution equipment with loads disaggregated for each load type.
Method 3: Branch circuits serve load types individually and provisions for adding future branch circuit monitoring.
Method 4: Complete metering system measures and reports loads by type.
See Chapter 8 of the Nonresidential Compliance Manual for more detail on Compliance Methods.

STATE OF CALIFORNIA
Outdoor Lighting
NRCC-LTO-E — CALIFORNIA ENERGY COMMISSION

CERTIFICATE OF COMPLIANCE			**NRCC-LTO-E**
Project Name:	TEMPORARY FACULTY VILLAGE	**Report Page:**	**(Page 1 of 7)**
Project Address:	3000 CAMPUS HILL DR	**Date Prepared:**	6/18/2020

A. GENERAL INFORMATION

01	Project Location (city)	LIVERMORE	04 Total Illuminated Hardscape Area (ft²)	3916.17
02	Climate Zone	12		
03	Outdoor Lighting Zone per Title 24 Part 1 §10.114 or as designated by Authority Having Jurisdiction (AHJ):			
☐ LZ-0: Very Low - Undeveloped Parkland	☐ LZ-2: Moderate - Rural Areas	☐ LZ-4: High - Must be reviewed by CA Energy Commission for Approval		
☐ LZ-1: Low - Developed Parkland	☒ LZ-3: Moderately High - Urban Areas			

B. PROJECT SCOPE

This table includes outdoor lighting systems that are within the scope of the permit application and are demonstrating compliance using the prescriptive path outlined in §140.7 or §141.0(b)2L for alterations.

My Project Consists of:

01	02	
☒ New Lighting System	Must Comply with Allowances from §140.7	
☐ Altered Lighting System	Is your alteration increasing the connected lighting load (Watts)?	Yes / No
03	04	05
% of Existing Luminaires Being Altered[1]	Sum Total of Luminaires Being Added or Altered	Calculation Method
☐ < 10% ☐ >= 10% and < 50% ☐ >= 50%		

Please proceed to Table F. Outdoor Lighting Fixture Schedule to define the project's luminaires.

[1] *FOOTNOTES: % of Existing Luminaires Being Altered = (Sum Total of Luminaires Being Added or Altered / Existing Luminaires within the Scope of the Permit Application) x 100.*

STATE OF CALIFORNIA
Outdoor Lighting
NRCC-LTO-E — CALIFORNIA ENERGY COMMISSION

CERTIFICATE OF COMPLIANCE			**NRCC-LTO-E**
Project Name:	TEMPORARY FACULTY VILLAGE	**Report Page:**	**(Page 4 of 7)**
Project Address:	3000 CAMPUS HILL DR	**Date Prepared:**	6/18/2020

H. OUTDOOR LIGHTING CONTROLS

This table demonstrates compliance with controls requirements for all new or altered luminaires installed as part of the permit application. For alteration projects, luminaires which are existing to remain (ie untouched) and luminaires which are removed and reinstalled (wiring only) do not need to be included in this table even if they are within the spaces covered by the permit application.
*When an option having a * is selected, the notes section of this table must be completed. The lighting controls section of the Compliance Summary Table on the first page will show "DOES NOT COMPLY" if the notes are left blank.*

Mandatory Controls

01	02	03	04	05	
Area Description	Shut-Off §130.2(c)1	Auto-Schedule §130.2(c)2	Motion Sensor §130.2(c)3	Field Inspector	
				Pass	Fail
Exterior	Photocontrol	Yes	Exempt*	☐	☐

* *NOTES: Controls with a * require a note in the space below explaining how compliance is achieved.*
EX: Not permitted by health & safety to be turned off; EXCEPTION 1 to §130.2(c)

Exterior	Each fixture is less than 40W

STATE OF CALIFORNIA
Electrical Power Distribution
NRCC-ELC-E — CALIFORNIA ENERGY COMMISSION

CERTIFICATE OF COMPLIANCE			**NRCC-ELC-E**
Project Name:	TEMPORARY FACULTY VILLAGE	**Report Page:**	**(Page 3 of 4)**
Project Address:	3000 CAMPUS HILL DR	**Date Prepared:**	6/18/2020

H. VOLTAGE DROP

This table includes entirely new or complete replacement electrical power distribution systems, or alterations that add, modify or replace both feeders and branch circuits to demonstrate compliance with §130.5(c). For alterations, only the altered circuits must demonstrate compliance per §141.0(b)2PIII

01	02			03	04	05	
Electrical Service Designation/Description	Combined Voltage Drop on Installed Feeder/Branch Circuit Conductors Compliance Method			Location of Voltage Drop Calculations[1]	Sheet Number for Voltage Drop Calculations in Construction Documents	Field Inspector	
						Pass	Fail
Existing	☒	Voltage drop less than 5%	☐ Permitted by CA Elec Code (Exception to 130.5(c))*	Attached	E0.30	☐	☐

* *NOTES: If "Permitted by CA Elec Code *" is selected under Compliance Method above, please indicate where the exception applies in the space provided below.*

Existing	

[1] *FOOTNOTES: Voltage drop calculations may be attached to the permit application outside the construction documents if allowed by the Authority Having Jurisdiction. Select "attached" if applicable. If calculations will be the responsibility of the installing contractor, select "Contractor Responsible".*

I.CIRCUIT CONTROLS FOR 120-VOLT RECEPTACLES AND CONTROLLED RECEPTACLES

This section does not apply to this project.

J. DECLARATION OF REQUIRED CERTIFICATES OF INSTALLATION

Selections have been made based on information provided in this document. If any selection have been changed by permit applicant, an explanation should be included in Table E. Additional Remarks. These documents must be provided to the building inspector during construction and can be found online at https://www.energy.ca.gov/title24/2019standards/2019_compliance_documents/Nonresidential_Documents/NRCI/

Yes	No	Form/Title	Field Inspector	
			Pass	Fail
●	○	NRCI-ELC-01-E - Must be submitted for all buildings	☐	☐

K. DECLARATION OF REQUIRED CERTIFICATES OF ACCEPTANCE

There are no Certificates of Acceptance applicable to electrical power distribution requirements.

STATE OF CALIFORNIA
Outdoor Lighting
NRCC-LTO-E — CALIFORNIA ENERGY COMMISSION

CERTIFICATE OF COMPLIANCE			**NRCC-LTO-E**
Project Name:	TEMPORARY FACULTY VILLAGE	**Report Page:**	**(Page 5 of 7)**
Project Address:	3000 CAMPUS HILL DR	**Date Prepared:**	6/18/2020

C. COMPLIANCE RESULTS

Results in this table are automatically calculated from data input and calculations in Tables F through I. Note: if any cell on this table says "COMPLIES with Exceptional Conditions" refer to Table D. Exceptional Conditions for guidance or see applicable Table referenced below.

Calculations of Total Allowed Lighting Power (Watts) §140.7 or §141.0(b)2L												Compliance Results			
01		02		03		04		05		06		07		08	09
General Hardscape Allowance §140.7(d)1 (See Table I)	+	Per Application §140.7(d)2 (See Table J)	+	Sales Frontage §140.7(d)2 (See Table K)	+	Ornamental §140.7(d)2 (See Table L)	+	Per Specific Area §140.7(d)2 (See Table M)	OR	Existing Power Allowance §141.0(b)2L (See Table N)	=	**Total Allowed** (Watts)	≥	**Total Actual** (Watts)	**07 must be >= 08**
610.03	+	---	+	---	+	---	+	---	OR	---	=	610.03	≥	128	COMPLIES
Cutoff Compliance (See Table G for Details)															N/A
Controls Compliance (See Table H for Details)															COMPLIES with Exceptional Conditions

D. EXCEPTIONAL CONDITIONS

This table is auto-filled with uneditable comments because of selections made or data entered in tables throughout the form.

E. ADDITIONAL REMARKS

This table includes remarks made by the permit applicant to the Authority Having Jurisdiction.

STATE OF CALIFORNIA
Outdoor Lighting
NRCC-LTO-E — CALIFORNIA ENERGY COMMISSION

CERTIFICATE OF COMPLIANCE			**NRCC-LTO-E**
Project Name:	TEMPORARY FACULTY VILLAGE	**Report Page:**	**(Page 6 of 7)**
Project Address:	3000 CAMPUS HILL DR	**Date Prepared:**	6/18/2020

I. LIGHTING POWER ALLOWANCE (per §140.7)

This table includes areas using allowance calculations per §140.7, General Hardscape Allowance is per Table 140.7-A while "Use it or lose it" Allowances are per Table 140.7-B . Indicate which allowances are being used to expand sections for user input. Luminaires that qualify for one of the "Use it or lose it" allowances shall not qualify for another "Use it or lose it" allowance.

☒ General Hardscape Allowance Table I (below)	01 "Use it or lose it" Allowance (select all that apply) (select all that apply)			
	☐ Per Application Table J	☐ Sales Frontage Table K	☐ Ornamental Table L	☐ Per Specific Area Table M

Calculated General Hardscape Lighting Power Allowance per Table 140.7-A (LZ 0, 1 & 4)
This section does not apply to this project.
Calculated General Hardscape Lighting Power Allowance per Table 140.7-A (LZ 2 & 3)

02	03	04	05	06	07	08	09	10
Area Description	Surface Type	Area Wattage Allowance (AWA)			Area Wattage Allowance (AWA)			Total General AWA + LWA (Watts)
		Illuminated Area (ft²)	Allowed Density (W/ft²)	Area Allowance (Watts)	Perimeter Length (lf)	Allowed Density (W/lf)	Linear Allowance (Watts)	
Exterior	Asphalt	3916.17	0.03	97.90425	648.5	0.4	162.125	260.02925
Initial Wattage Allowance for Entire Site (Watts):								350
Total General Hardscape Allowance (Watts):								610.02925

J. LIGHTING ALLOWANCE: PER APPLICATION

This section does not apply to this project.

K. LIGHTING ALLOWANCE: SALES FRONTAGE

This section does not apply to this project.

L. LIGHTING ALLOWANCE: ORNAMENTAL

This section does not apply to this project.

M. LIGHTING ALLOWANCE: PER SPECIFIC AREA

This section does not apply to this project.

IDENTIFICATION STAMP
DIV. OF THE STATE ARCHITECT
APP: 01-119031 INC:
REVIEWED FOR
SS ☑ FLS ☑ ACS ☑
DATE: 10/22/2020

LPAS

2484 Natomas Park Drive Suite 100 Sacramento CA 95833
916 443 0335 lpasdesign.com Architecture + Design

LAS POSITAS TEMPORARY FACULTY VILLAGE MODULAR OFFICES

LAS POSITAS COMMUNITY COLLEGE
LIVERMORE, CA

ARCHITECT'S STAMP APPROVAL

THIS DOCUMENT CONTAINS INFORMATION THAT IS PROPRIETARY TO LPAS, INC. AND IS FURNISHED FOR THE PURPOSES OF REVIEW, BIDDING OR CONSTRUCTION OF THE PROJECT LISTED IN THE JOB TITLE BOX ABOVE AND SHALL NOT BE USED FOR ANY OTHER PURPOSE OR RELEASED TO ANY OTHER PARTY WITHOUT THE WRITTEN CONSENT OF LPAS, INC. INFORMATION CONTAINED HEREIN IS AN INSTRUMENT OF PROFESSIONAL SERVICES AND SHALL REMAIN THE PROPERTY OF LPAS, INC. ALL RIGHTS RESERVED COPYRIGHT © 2009.

THIS DRAWING IS NOT FINAL OR TO BE USED FOR CONSTRUCTION UNTIL IT IS SIGNED BY THE ARCHITECT AND ENGINEER.

CONSULTANT

REGISTERED PROFESSIONAL ENGINEER THOMAS B. JUN No. E19320 ELECTRICAL STATE OF CALIFORNIA
Date Signed: 8/27/20

INTERFACE ENGINEERING
PROJECT CONTACT: Thomas Jun
135 Main Street, Suite 400
San Francisco, CA 94105
TEL: 415.489.7240
www.interfaceengineering.com

TITLE 24 FORMS - ELECTRICAL

PROJECT NO: 2020-0001
DATE: 2020-08-28

SHEET NO:
E0.20s

FOR CONSTRUCTION

STATE OF CALIFORNIA

Outdoor Lighting

NRCC-LTO-E

CALIFORNIA ENERGY COMMISSION

CERTIFICATE OF COMPLIANCE			**NRCC-LTO-E**
Project Name:	TEMPORARY FACULTY VILLAGE	**Report Page:**	**(Page 6 of 7)**
Project Address:	3000 CAMPUS HILL DR	**Date Prepared:**	6/18/2020

N. EXISTING CONDITIONS POWER ALLOWANCE (alterations only)

This section does not apply to this project.

O. DECLARATION OF REQUIRED CERTIFICATES OF INSTALLATION

Selections have been made based on information provided in this document. If any selection have been changed by permit applicant, an explanation should be included in Table E. Additional Remarks. These documents must be provided to the building inspector during construction and can be found online at https://www.energy.ca.gov/title24/2019standards/2019_compliance_documents/Nonresidential_Documents/NRCI/

Yes	No	Form/Title	Field Inspector	
			Pass	Fail
●	○	NRCI-LTO-01-E - Must be submitted for all buildings	☐	☐
●	○	NRCI-LTO-02-E- Must be submitted for a lighting control system, or for an Energy Management Control System (EMCS), to be recognized for compliance.	☐	☐

P. DECLARATION OF REQUIRED CERTIFICATES OF ACCEPTANCE

Selections have been made based on information provided in this document. If any selection have been changed by permit applicant, an explanation should be included in Table E. Additional Remarks. These documents must be provided to the building inspector during construction and must be completed through an Acceptance Test Technician Certification Provider (ATTCP). For more information visit: http://www.energy.ca.gov/title24/attcp/providers.html

Yes	No	Form/Title	Field Inspector	
			Pass	Fail
●	○	NRCA-LTO-02-A - Must be submitted for all outdoor lighting controls except for alterations where controls are added to <= 20 luminaires.	☐	☐

Registration Number:

CA Building Energy Efficiency Standards - 2019 Nonresidential Compliance

Registration Date/Time:

Report Version: 2019.0.001
Schema Version: rev 20190401

Registration Provider: Energysoft

Report Generated: 2020-06-18 16:16:52

STATE OF CALIFORNIA

Outdoor Lighting

NRCC-LTO-E

CALIFORNIA ENERGY COMMISSION

CERTIFICATE OF COMPLIANCE			**NRCC-LTO-E**
Project Name:	TEMPORARY FACULTY VILLAGE	**Report Page:**	**(Page 7 of 7)**
Project Address:	3000 CAMPUS HILL DR	**Date Prepared:**	6/18/2020

DOCUMENTATION AUTHOR'S DECLARATION STATEMENT

I certify that this Certificate of Compliance documentation is accurate and complete.

Documentation Author Name: Thomas Jun	Documentation Author Signature:
Company: Interface Engineering Inc.	Signature Date: 2020-06-18
Address: 135 Main Street, Suite 400	CEA/ HERS Certification Identification (if applicable):
City/State/Zip: San Francisco CA 94105	Phone: 415-489-3212

RESPONSIBLE PERSON'S DECLARATION STATEMENT

I certify the following under penalty of perjury, under the laws of the State of California:

1. The information provided on this Certificate of Compliance is true and correct.
2. I am eligible under Division 3 of the Business and Professions Code to accept responsibility for the building design or system design identified on this Certificate of Compliance (responsible designer)
3. The energy features and performance specifications, materials, components, and manufactured devices for the building design or system design identified on this Certificate of Compliance conform to the requirements of Title 24, Part 1 and Part 6 of the California Code of Regulations.
4. The building design features or system design features identified on this Certificate of Compliance are consistent with the information provided on other applicable compliance documents, worksheets, calculations, plans and specifications submitted to the enforcement agency for approval with this building permit application.
5. I will ensure that a completed signed copy of this Certificate of Compliance shall be made available with the building permit(s) issued for the building, and made available to the enforcement agency for all applicable inspections. I understand that a completed signed copy of this Certificate of Compliance is required to be included with the documentation the builder provides to the building owner at occupancy.

Responsible Designer Name: Thomas Jun	Responsible Designer Signature:
Company: Interface Engineering Inc.	Date Signed: 2020-06-18
Address: 135 Main Street, Suite 400	License: E19320
City/State/Zip: San Francisco CA 94105	Phone: 415-489-3212

Registration Number:

CA Building Energy Efficiency Standards - 2019 Nonresidential Compliance

Registration Date/Time:

Report Version: 2019.0.001
Schema Version: rev 20190401

Registration Provider: Energysoft

Report Generated: 2020-06-18 16:16:52

Voltage drop calculator

SINGLE PHASE	VOLTAGE	# OF SETS WIRES	WIRE SIZE	AMPACITY	LENGTH (FEET)	VOLTAGE DROP	% VOLTAGE DROP	3% TOLERANCE MET?
	208	1	#1	90 A	250	6.92	3.33	NO
3 PHASE LINE TO LINE	**VOLTAGE**	**# OF SETS WIRES**	**WIRE SIZE**	**AMPACITY**	**LENGTH (FEET)**	**VOLTAGE DROP**	**% VOLTAGE DROP**	**3% TOLERANCE MET?**
	480	2	#4/0	450 A	330	7.82	1.63	YES

IDENTIFICATION STAMP
DIV. OF THE STATE ARCHITECT
APP: 01-119031 INC:
REVIEWED FOR
SS ☑ FLS ☑ ACS ☑
DATE: 10/22/2020

LPAS
2484 Natomas Park Drive Suite 100 Sacramento CA 95833
916 443 0335 lpasdesign.com Architecture + Design

LAS POSITAS TEMPORARY FACULTY VILLAGE MODULAR OFFICES

LAS POSITAS COMMUNITY COLLEGE
LIVERMORE, CA

ARCHITECT'S STAMP APPROVAL

THIS DOCUMENT CONTAINS INFORMATION THAT IS PROPRIETARY TO LPAS, INC. AND IS FURNISHED FOR THE PURPOSES OF REVIEW, BIDDING OR CONSTRUCTION OF THE PROJECT LISTED IN THE JOB TITLE BOX ABOVE AND SHALL NOT BE USED FOR ANY OTHER PURPOSE OR RELEASED TO ANY OTHER PARTY WITHOUT THE WRITTEN CONSENT OF LPAS, INC. INFORMATION CONTAINED HEREIN IS AN INSTRUMENT OF PROFESSIONAL SERVICES AND SHALL REMAIN THE PROPERTY OF LPAS, INC. ALL RIGHTS RESERVED COPYRIGHT © 2009.

THIS DRAWING IS NOT FINAL OR TO BE USED FOR CONSTRUCTION UNTIL IT IS SIGNED BY THE ARCHITECT AND ENGINEER.

CONSULTANT

REGISTERED PROFESSIONAL ENGINEER
THOMAS B. JUN
No. E19320
ELECTRICAL
STATE OF CALIFORNIA

Date Signed: 8/27/20

INTERFACE ENGINEERING
PROJECT 2020-0001
CONTACT Thomas Jun
135 Main Street, Suite 400
San Francisco, CA 94105
TEL 415.489.7240
www.interfaceengineering.com

TITLE 24 FORMS - ELECTRICAL

PROJECT NO: 2020-0001
DATE: 2020-08-28

SHEET NO:

E0.30s

FOR CONSTRUCTION

GENERAL SHEET NOTES

A. COORDINATE EXACT LOCATION AND MOUNTING HEIGHT OF RECEPTACLE, ELECTRICAL DEVICES AND EQUIPMENT WITH ARCHITECT PRIOR TO INSTALLATION.

SHEET KEYNOTES

1. DISTRIBUTION PANEL MOUNTED VIA UNISTRUT WITH NEMA-3R ENCLOSURE.
2. PAD MOUNTED TRANSFORMER WITH NEMA-3R ENCLOSURE.
3. HAND DIG TRENCH ACROSS THE STREET FOR UNDERGROUND CONDUIT. COORDINATE WITH UTILITY AND IN THE FIELD FOR ALL EXISTING/NEW UNDERGROUND PIPING.
4. PROVIDE DISCONNECT ON THE PRIMARY SIDE OF THE TRANSFORMER.
5. PROVIDE (2) 2" CONDUIT FOR UNDERGROUND ROUTING.
6. HOUSE-PAD FOR ELECTRICAL EQUIPMENT. COORDINATE WITH ARCHITECT FOR EXACT LOCATION PRIOR TO INSTALLATION.
7. FURNISH INSTALL UNDERGROUND PULLBOX EVERY 270 DEGREE BEND PER SPECIFICATIONS.
8. REFER TO SHEET 2/E5.10s FOR PENETRATION DETAIL.
9. PATHWAY FOR NEW UTILITIES IS DIAGRAMMATIC IN NATURE AND DESIGNED TO MINIMIZE UTILITY CONFLICTS. CONTRACTOR SHALL POTHOLE ROUTE TO CONFIRM LOCATION OF EXISTING HYDRONICS AND CONFIRM THE MOST EFFICIENT ROUTE FOR NEW UTILITIES. PRIOR TO POTHOLING, MEET ON-SITE TO REVIEW AND FINALIZE POTHOLE LOCATIONS. PROVIDE UP TO 10 POTHOLES.

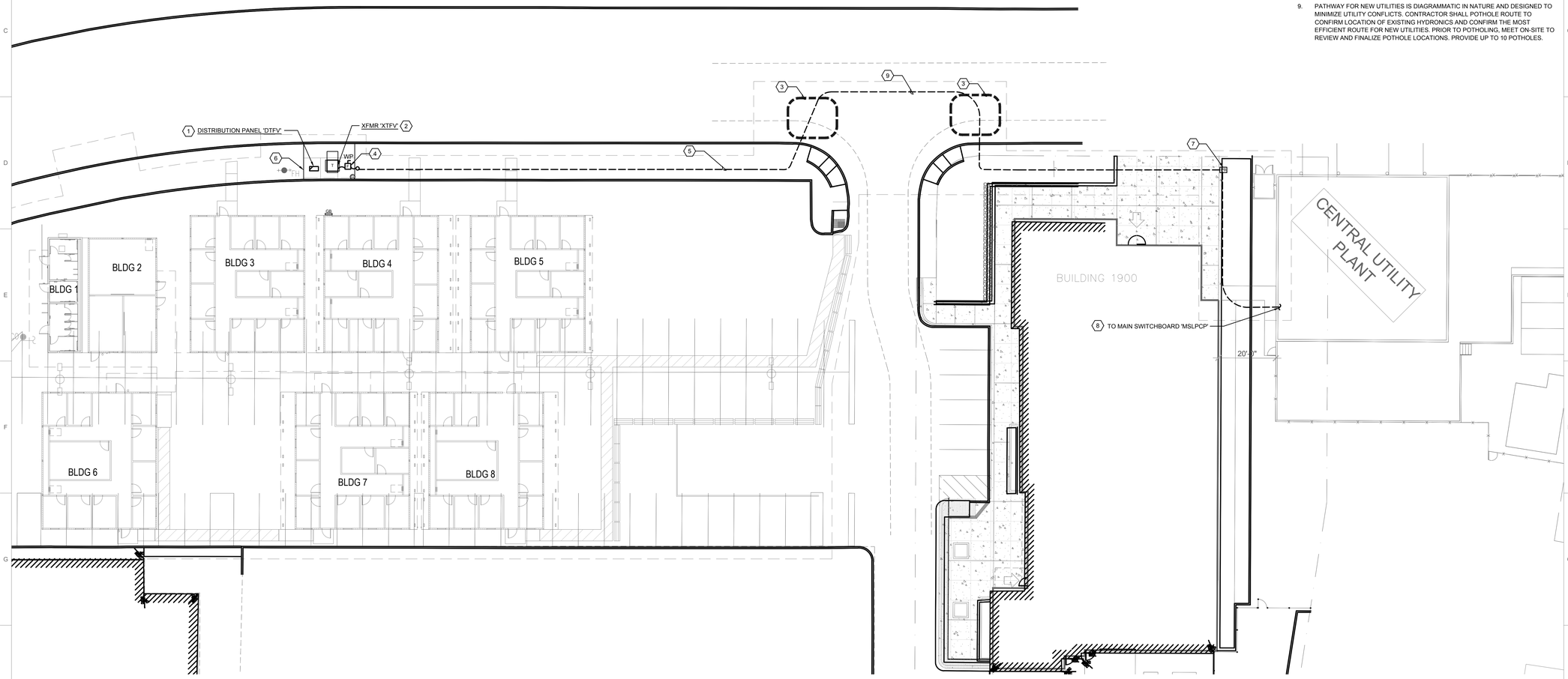

1 SITE PLAN - POWER

0 8' 16' 32'

SCALE: 1/16"=1'-0"

IDENTIFICATION STAMP
DIV. OF THE STATE ARCHITECT
APP: 01-119031 INC:
REVIEWED FOR
SS ☑ FLS ☑ ACS ☑
DATE: 10/22/2020

LPAS

2484 Natomas Park Drive Suite 100 Sacramento CA 95833
916 443 0335 lpasdesign.com Architecture + Design

LAS POSITAS
TEMPORARY FACULTY
VILLAGE MODULAR
OFFICES

LAS POSITAS COMMUNITY COLLEGE
LIVERMORE, CA

ARCHITECT'S STAMP APPROVAL

THIS DOCUMENT CONTAINS INFORMATION THAT IS PROPRIETARY TO LPAS, INC. AND IS FURNISHED FOR THE PURPOSES OF REVIEW, BIDDING OR CONSTRUCTION OF THE PROJECT LISTED IN THE JOB TITLE BOX ABOVE AND SHALL NOT BE USED FOR ANY OTHER PURPOSE OR RELEASED TO ANY OTHER PARTY WITHOUT THE WRITTEN CONSENT OF LPAS, INC. INFORMATION CONTAINED HEREIN IS AN INSTRUMENT OF PROFESSIONAL SERVICES AND SHALL REMAIN THE PROPERTY OF LPAS, INC. ALL RIGHTS RESERVED COPYRIGHT © 2009.

THIS DRAWING IS NOT FINAL OR TO BE USED FOR CONSTRUCTION UNTIL IT IS SIGNED BY THE ARCHITECT AND ENGINEER.

CONSULTANT

REGISTERED PROFESSIONAL ENGINEER
THOMAS B. JUN
No. E19320
ELECTRICAL
STATE OF CALIFORNIA

Date Signed: 9/11/20

INTERFACE ENGINEERING
PROJECT 2020-0001
CONTACT Thomas Jun
135 Main Street, Suite 400
San Francisco, CA 94105
TEL 415.489.7240
www.interfaceengineering.com

SITE PLAN - POWER

PROJECT NO: 2020-0001
DATE: 2020-08-28

SHEET NO:
E1.10s

FOR CONSTRUCTION

GENERAL SHEET NOTES

A. COORDINATE EXACT LOCATION AND MOUNTING HEIGHT OF LUMINAIRES AND LIGHTING CONTROLS WITH ARCHITECT PRIOR TO INSTALLATION.

SHEET KEYNOTES

1. PROVIDE TIMECLOCK WITH PHOTOCELL IN NEMA-3R ENCLOSURE.

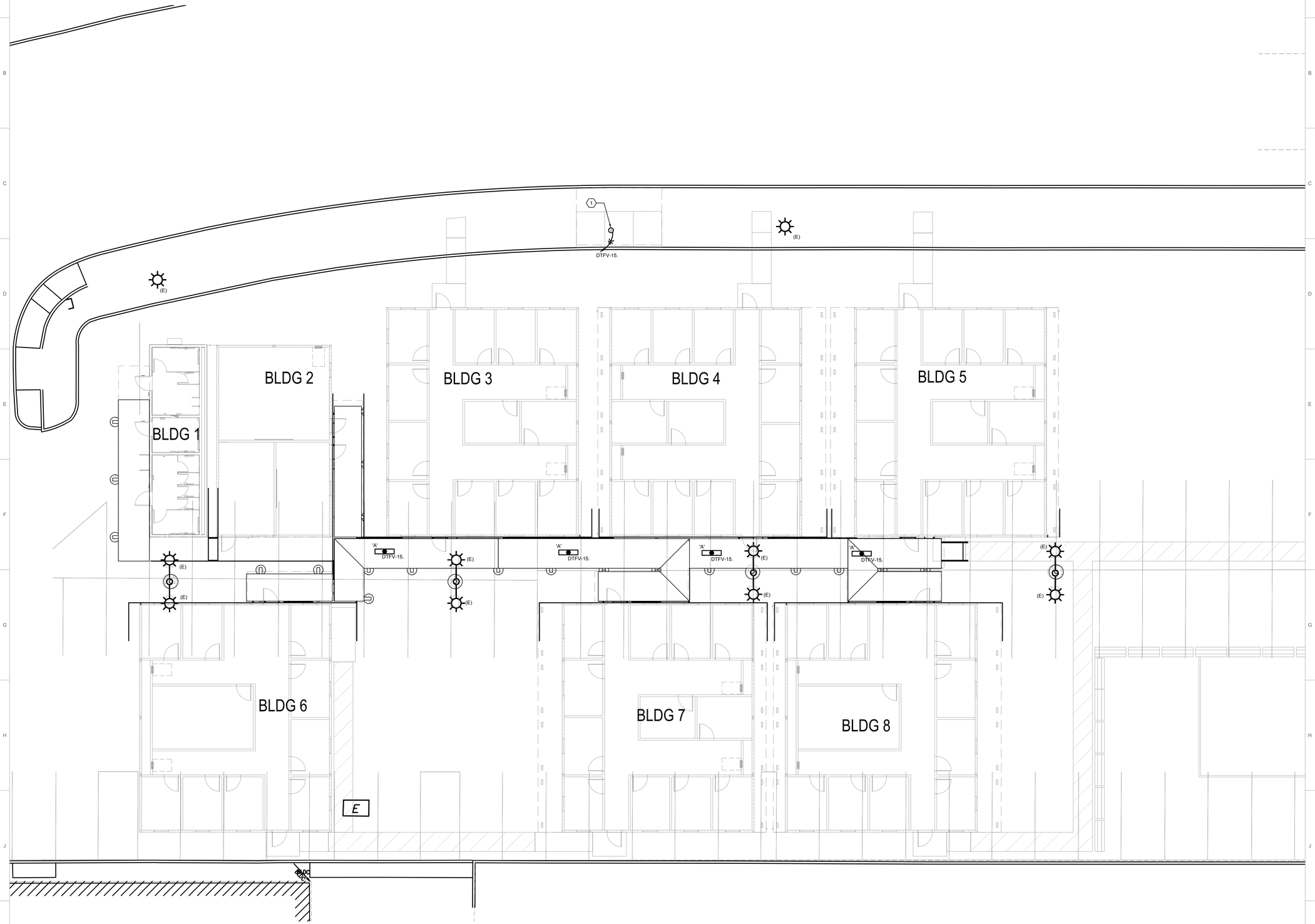

1 FLOOR PLAN - LIGHTING

0 4' 8' 16'

SCALE: 1/8"=1'-0"

IDENTIFICATION STAMP
DIV. OF THE STATE ARCHITECT
APP: 01-119031 INC:
REVIEWED FOR
SS ☑ FLS ☑ ACS ☑
DATE: 10/22/2020

LPAS

2484 Natomas Park Drive Suite 100 Sacramento CA 95833
916 443 0335 lpasdesign.com Architecture + Design

LAS POSITAS
TEMPORARY FACULTY
VILLAGE MODULAR
OFFICES

LAS POSITAS COMMUNITY COLLEGE
LIVERMORE, CA

ARCHITECT'S STAMP APPROVAL

THIS DOCUMENT CONTAINS INFORMATION THAT IS PROPRIETARY TO LPAS, INC. AND IS FURNISHED FOR THE PURPOSES OF REVIEW, BIDDING OR CONSTRUCTION OF THE PROJECT LISTED IN THE JOB TITLE BOX ABOVE AND SHALL NOT BE USED FOR ANY OTHER PURPOSE OR RELEASED TO ANY OTHER PARTY WITHOUT THE WRITTEN CONSENT OF LPAS, INC. INFORMATION CONTAINED HEREIN IS AN INSTRUMENT OF PROFESSIONAL SERVICES AND SHALL REMAIN THE PROPERTY OF LPAS, INC. ALL RIGHTS RESERVED COPYRIGHT © 2009.

THIS DRAWING IS NOT FINAL OR TO BE USED FOR CONSTRUCTION UNTIL IT IS SIGNED BY THE ARCHITECT AND ENGINEER.

CONSULTANT

REGISTERED PROFESSIONAL ENGINEER
THOMAS B. JUN
No. E19320
ELECTRICAL
STATE OF CALIFORNIA

Date Signed: 8/27/20

INTERFACE ENGINEERING
PROJECT 2020-0001
CONTACT Thomas Jun
135 Main Street, Suite 400
San Francisco, CA 94105
TEL 415.489.7240
www.interfaceengineering.com

FLOOR PLAN - LIGHTING

PROJECT NO: 2020-0001
DATE: 2020-08-28

SHEET NO:

E2.10s

FOR CONSTRUCTION

GENERAL SHEET NOTES

A. COORDINATE EXACT LOCATION AND MOUNTING HEIGHT OF RECEPTACLE, ELECTRICAL DEVICES AND EQUIPMENT WITH ARCHITECT PRIOR TO INSTALLATION.

SHEET KEYNOTES

1. CONDUIT TO BE RUN TO INSIDE MODULAR PANEL. PANELBOARD WILL BE PROVIDED BY MODULAR CONTRACTOR. COORDINATE EXACT LOCATION WITH MODULAR DESIGNER.
2. 1-1/4" CONDUIT ON GROUND/UNDER WALKWAY. REFER TO MOUNTING DETAIL 8/E5.10s. COORDINATE WITH TECHNOLOGY DRAWING FOR EXACT LOCATION OF IDF. COORDINATE WITH ARCHITECT PRIOR TO INSTALLATION.
3. CONDUIT TRANSITION FROM GROUND TO WALKWAY ROOF.
4. CONDUIT TRANSITION FROM WALKWAY ROOF TO GROUND.
5. CONCEAL CONDUIT IN WALKWAY ROOF PURLINS. COORDINATE WITH ARCHITECT PRIOR TO INSTALLATION.
6. LOCATE IRRIGATION CONTROL, 120V. COORDINATE WITH LANDSCAPE CONSULTANT AND ARCHITECT FOR EXACT LOCATION PRIOR TO INSTALLATION.
7. PROVIDE PULLBOX UNDER THE WALKWAY, ABOVE GROUND EVERY 270 DEGREE TURN PER SPECIFICATIONS.
8. PROVIDE PULLBOX IN THE ROOF OF THE WALKWAY EVERY 270 DEGREE TURN PER SPECIFICATIONS.

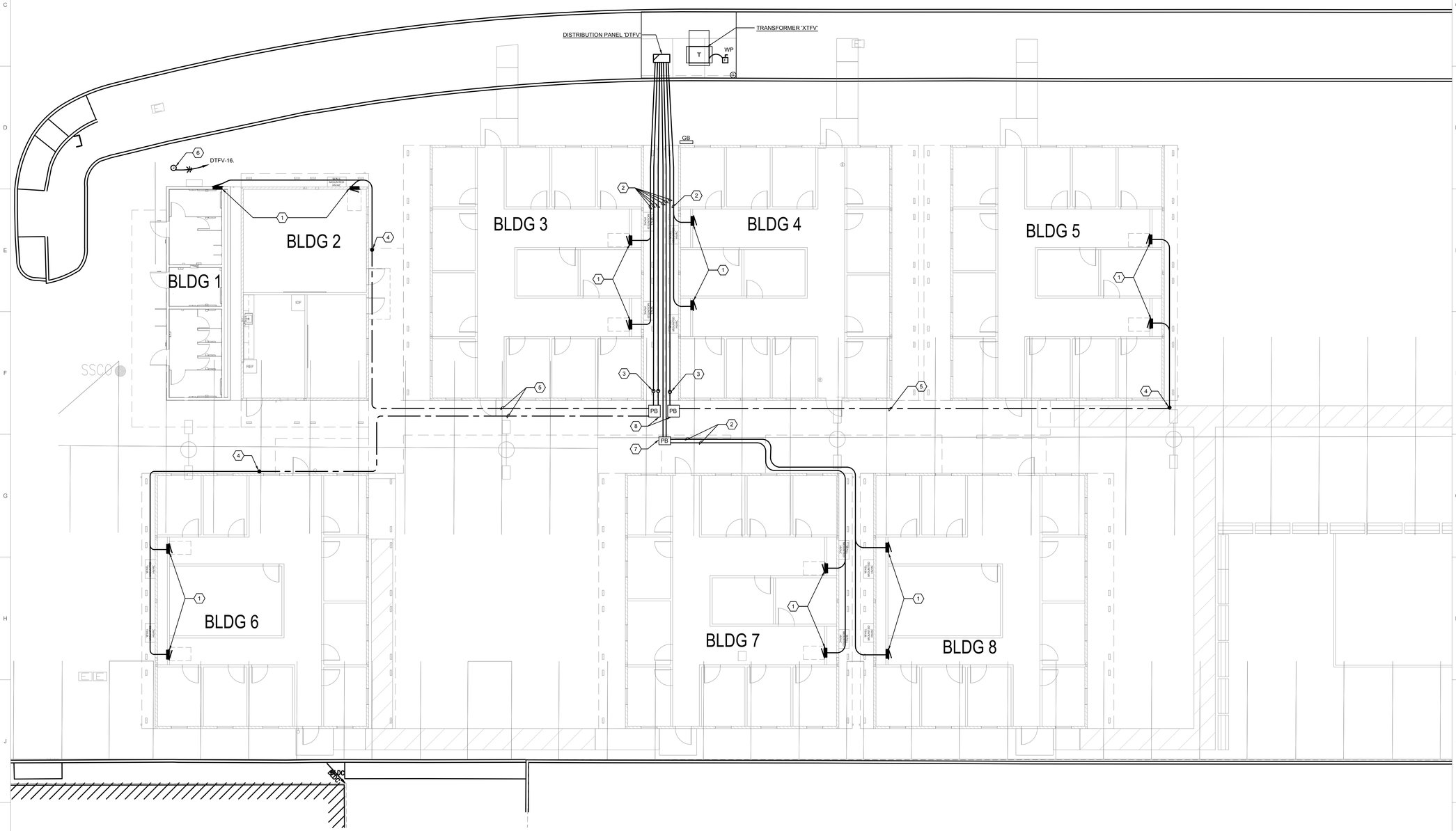

1 FLOOR PLAN - POWER

0 4' 8' 16'

SCALE: 1/8"=1'-0"

IDENTIFICATION STAMP
DIV. OF THE STATE ARCHITECT
APP: 01-119031 INC:
REVIEWED FOR
SS ☑ FLS ☑ ACS ☑
DATE: 10/22/2020

LPAS

2484 Natomas Park Drive Suite 100 Sacramento CA 95833
916 443 0335 lpasdesign.com Architecture + Design

LAS POSITAS
TEMPORARY FACULTY
VILLAGE MODULAR
OFFICES

LAS POSITAS COMMUNITY COLLEGE
LIVERMORE, CA

ARCHITECT'S STAMP APPROVAL

THIS DOCUMENT CONTAINS INFORMATION THAT IS PROPRIETARY TO LPAS, INC. AND IS FURNISHED FOR THE PURPOSES OF REVIEW, BIDDING OR CONSTRUCTION OF THE PROJECT LISTED IN THE JOB TITLE BOX ABOVE AND SHALL NOT BE USED FOR ANY OTHER PURPOSE OR RELEASED TO ANY OTHER PARTY WITHOUT THE WRITTEN CONSENT OF LPAS, INC. INFORMATION CONTAINED HEREIN IS AN INSTRUMENT OF PROFESSIONAL SERVICES AND SHALL REMAIN THE PROPERTY OF LPAS, INC. ALL RIGHTS RESERVED COPYRIGHT © 2009.

THIS DRAWING IS NOT FINAL OR TO BE USED FOR CONSTRUCTION UNTIL IT IS SIGNED BY THE ARCHITECT AND ENGINEER.

CONSULTANT

REGISTERED PROFESSIONAL ENGINEER
THOMAS B. JUN
No. E19320
ELECTRICAL
STATE OF CALIFORNIA

Date Signed: 8/28/20

INTERFACE ENGINEERING
PROJECT 2020-0001
CONTACT Thomas Jun
135 Main Street, Suite 400
San Francisco, CA 94105
TEL 415.489.7240
www.interfaceengineering.com

FLOOR PLAN - POWER

PROJECT NO: 2020-0001
DATE: 2020-08-28

SHEET NO:

E3.10s

FOR CONSTRUCTION

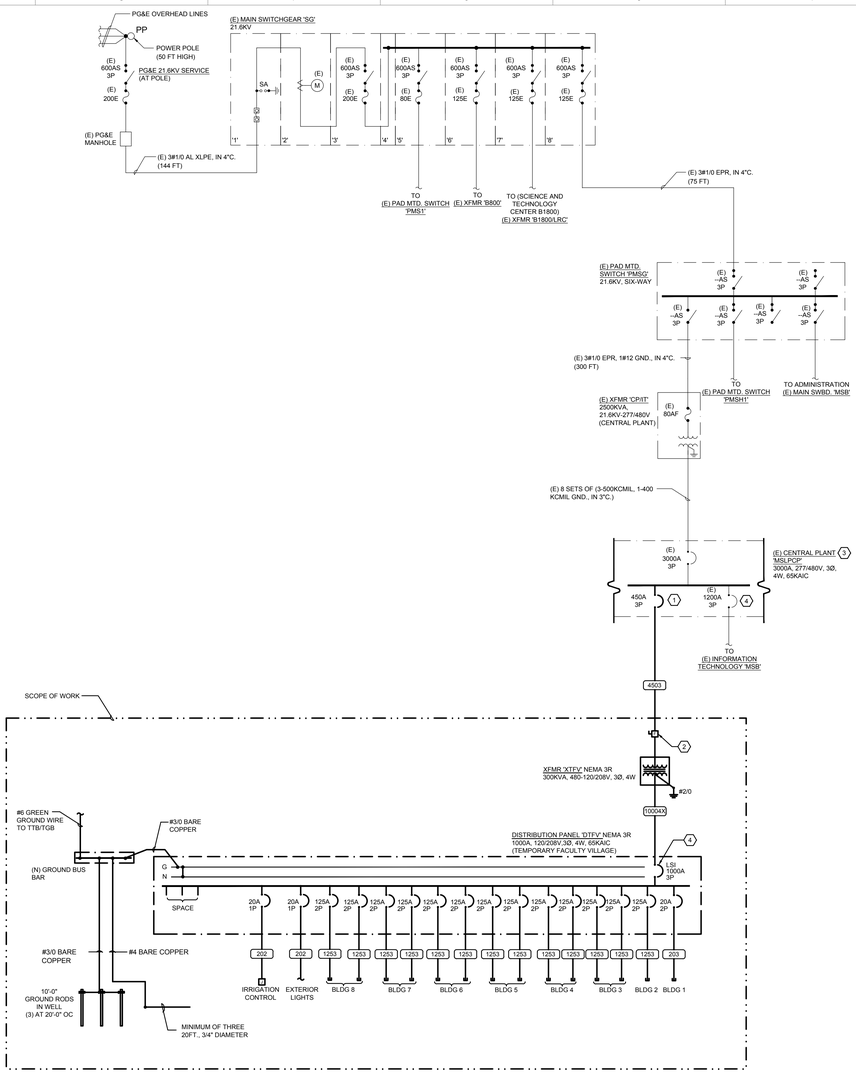

1 PARTIAL SINGLE LINE DIAGRAM

NO SCALE

GENERAL SHEET NOTES

A. UNLESS OTHERWISE NOTED, ELECTRICAL EQUIPMENT, DEVICES, FEEDERS, ETC., SHOWN ARE EXISTING.

B. EXISTING CONDITIONS SHOWN ARE BASED ON RECORD DRAWINGS AS REFERENCED. EXISTING CONDITIONS NEED TO BE VERIFIED.

SHEET KEYNOTES

1. NEW CIRCUIT BREAKER IN EXISTING SPACE AVAILABLE. NEW BREAKER SHALL MATCH EXISTING DISTRIBUTION PANEL AIC RATING.
2. PROVIDE DISCONNECT FOR TRANSFORMER.
3. SWITCHBOARD 'MSLPCP' TO BE MODIFIED. CONTRACTOR SHALL PERFORM ACCEPTANCE TESTING IN ACCORDANCE TO THE SPECIFICATIONS.
4. HIRE THIRD PARTY TESTING AGENCY TO PERFORM POWER STUDY AND FURNISH ARC FLASH LABEL. REFER TO SPECIFICATIONS FOR ADDITIONAL REQUIREMENTS.

FEEDER SCHEDULE

Key

A, C, S, X — A = Aluminum; C = Conduit only; S = Service secondary; X = Separately derived system

202	2 #12 CU, 1 #12 CU GND., IN 3/4" C.
203	3 #12 CU, 1 #12 CU GND., IN 3/4" C.
1253	3 #1 CU, 1 #6 CU GND., IN 1-1/4" C.
4503	2 SETS OF (3 #4/0 CU, 1 #2 CU GND., IN 2" C.)
10004X	3 SETS OF (4 - 400 kcmil CU, 1 #3/0 CU GND., IN 3" C.)

2020-0001

Distribution Panel 'DTFV'

Load No.	Description / Location	Note	Load (VA)	Load Type
1	BUILDING 3AA		10,038	S
-	---		8,168	S
2	BUILDING 3AB		9,788	S
-	---		7,948	S
3	BUILDING 4BA		10,038	S
-	---		8,348	S
4	BUILDING 4BB		10,038	S
-	---		8,308	S
5	BUILDING 5BA		10,038	S
-	---		8,348	S
6	BUILDING 5BB		10,038	S
-	---		8,308	S
7	BUILDING 6BA		10,038	S
-	---		8,348	S
8	BUILDING 6BB		10,038	S
-	---		8,308	S
9	BUILDING 7AA		10,038	S
-	---		8,168	S
10	BUILDING 7AB		9,788	S
-	---		7,948	S
11	BUILDING 8BA		10,038	S
-	---		8,348	S
12	BUILDING 8BB		10,038	S
-	---		8,308	S
13	BUILDING 2		9,600	S
-	---		8,668	S
14	BUILDING 1		1,480	S
-	---		1,506	S
15	EXTERIOR WALKWAY LIGHTING		160	L
16	IRRIGATION CONTROL		200	G
17	SPACE			
-	---			
-	---			
18	SPACE			
-	---			
-	---			

Total Connected Load:	Ph A	83,968 VA	699	Amps
Total Connected Load:	Ph B	81,752 VA	681	Amps
Total Connected Load:	Ph C	74,714 VA	622	Amps
Total Connected Load:		251.9 **KVA**	699.2	**Amps**
Total Demand Load:		243.6 **KVA**	676.2	**Amps**

NOTES:
1.
2.
3.
4.
5.

Existing Switchboard 'MSLPCP' 3000A, 277/480, 3PH, 4 Wire

Peak Demand Load	=	**675**	**KVA**
Existing Sub-Total 125%*(Peak - Demo)	=	**844.0**	**KVA**
1st Floor New Loads			
Switchboard DTFV	=	301.4	KVA
Sub-Total New Load	=	**301.4**	**KVA**
Total Load (Existing Sub-Total + New)		**1145.4**	**KVA**
Total Connected Load		**1377.8**	**Amps**

IDENTIFICATION STAMP
DIV. OF THE STATE ARCHITECT
APP: 01-119031 INC:
REVIEWED FOR
SS ☑ FLS ☑ ACS ☑
DATE: 10/22/2020

LPAS

2484 Natomas Park Drive Suite 100 Sacramento CA 95833
916 443 0335 lpasdesign.com Architecture + Design

LAS POSITAS
TEMPORARY FACULTY
VILLAGE MODULAR
OFFICES

LAS POSITAS COMMUNITY COLLEGE
LIVERMORE, CA

ARCHITECT'S STAMP APPROVAL

THIS DOCUMENT CONTAINS INFORMATION THAT IS PROPRIETARY TO LPAS, INC. AND IS FURNISHED FOR THE PURPOSES OF REVIEW, BIDDING OR CONSTRUCTION OF THE PROJECT LISTED IN THE JOB TITLE BOX ABOVE AND SHALL NOT BE USED FOR ANY OTHER PURPOSE OR RELEASED TO ANY OTHER PARTY WITHOUT THE WRITTEN CONSENT OF LPAS, INC. INFORMATION CONTAINED HEREIN IS AN INSTRUMENT OF PROFESSIONAL SERVICES AND SHALL REMAIN THE PROPERTY OF LPAS, INC. ALL RIGHTS RESERVED COPYRIGHT © 2009.

THIS DRAWING IS NOT FINAL OR TO BE USED FOR CONSTRUCTION UNTIL IT IS SIGNED BY THE ARCHITECT AND ENGINEER.

CONSULTANT

REGISTERED PROFESSIONAL ENGINEER
THOMAS B. JUN
No. E19320
ELECTRICAL
STATE OF CALIFORNIA
Date Signed: 8/27/20

INTERFACE ENGINEERING
PROJECT 2020-0001
CONTACT Thomas Jun
135 Main Street, Suite 400
San Francisco, CA 94105
TEL 415.489.7240
www.interfaceengineering.com

PANEL SCHEDULE, PARTIAL SINGLE LINE - ELECTRICAL

PROJECT NO: 2020-0001
DATE: 2020-08-28

SHEET NO:

E4.10s

FOR CONSTRUCTION

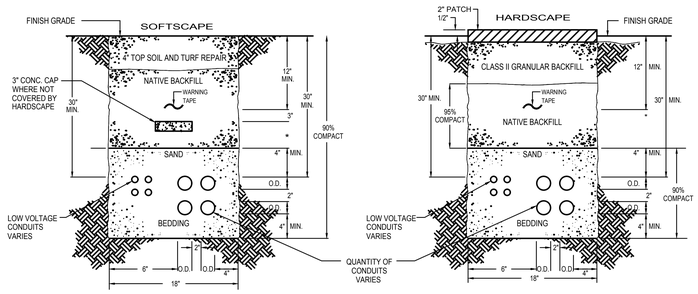

MINIMUM CLEARANCE REQUIREMENTS (INCHES)

	PC	SC	G	TEL	TV	LV	W
PRIMARY CONDUIT (601V-22KV) (PC)	-	6	36	36	36	36	36
SECONDARY POWER CONDUIT (0-600V) (SC)	6	-	12	12	12	12	36
GAS (G)	36	12	-	12	12	12	36
TELEPHONE (TEL)	36	12	12	-	2	2	36
CATV (TV)	36	12	12	2	-	2	36
OTHER LOW VOLTAGE (LV)	36	12	12	2	2	-	36
WET UTILITES (W)	36	36	36	36	36	36	-

TABLE ONLY APPLIES TO CONDUITS AFTER THE UTILITY POINT OF CONNECTION.

NOTES:

1. ALL TRENCHES MUST CONFORM TO O.S.H.A. REQUIREMENTS.
2. PROVIDE 12" SEPARATION WHEN CROSSING "WET" UTILITIES. IF SEPARATION CANNOT BE CONTAINED ENCASE IN CONCRETE.
3. CRUSHED GRAVEL MATERIAL REQUIRES 95% COMPACTION MINIMUM.
* OPTIONAL AREA - CAN BE FILLED WITH EITHER CRUSHED GRAVEL OR SAND BEDDING MATERIAL.

1 CONDUIT TRENCHING

NO SCALE

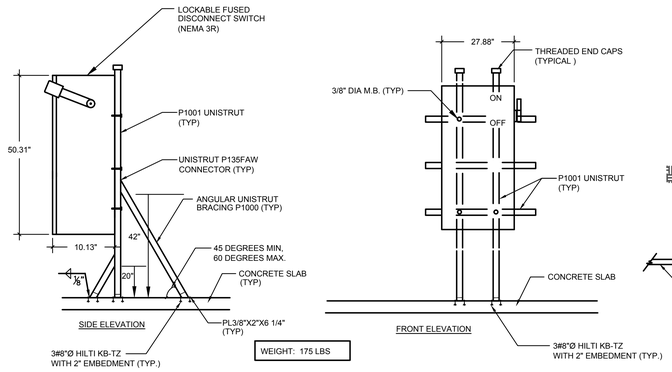

WEIGHT: 175 LBS

4 DISCONNECT SWITCH MOUNTING DETAIL

NO SCALE

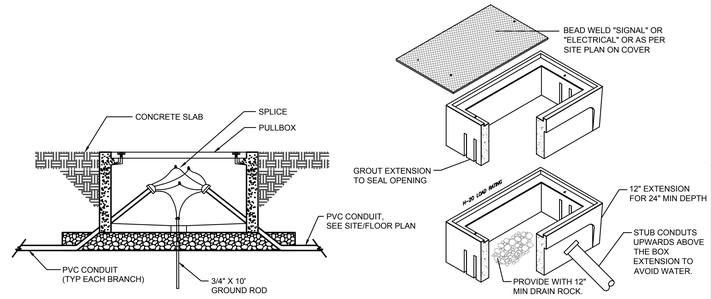

7 UNDERGROUND PULLBOX

NO SCALE

UL/cUL SYSTEM NO. W-J-1124

METAL PIPE THROUGH CONCRETE WALL OR BLOCK WALL ASSEMBLY

F-RATING = 1 AND 2-HR.
T-RATING = 0-HR.

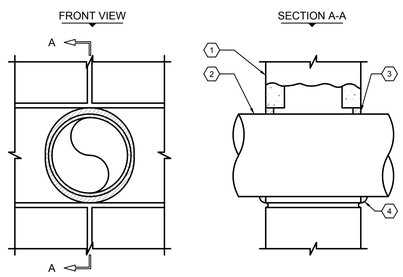

NOTES:

1. MAXIMUM DIAMETER OF OPENING = 5".
2. ANNULAR SPACE = MINIMUM 0", MAXIMUM 1/2".
3. PIPE MAY BE INSTALLED AT AN ANGLE NOT GREATER THAN 45° FROM PERPENDICULAR.

DETAIL KEYNOTES

1 CONCRETE WALL ASSEMBLY (1-HR. OR 2-HR. FIRE-RATING):
- A. LIGHTWEIGHT OR NORMAL WEIGHT CONCRETE WALL (MIN. 3-3/4" THICK, FOR 1-HR. FIRE- RATING).
- B. LIGHTWEIGHT OR NORMAL WEIGHT CONCRETE WALL (MIN. 5" THICK, FOR 2-HR. FIRE-RATING).
- C. ANY UL/ULC CLASSIFIED CONCRETE BLOCK WALL.

2 PENETRATING ITEM TO BE ONE OF THE FOLLOWING :
- A. MAXIMUM 4" DIAMETER STEEL PIPE (SCHEDULE 10 OR HEAVIER).
- B. MAXIMUM 4" DIAMETER CAST IRON PIPE.
- C. MAXIMUM 4" NOMINAL DIAMETER COPPER PIPE.
- D. MAXIMUM 4" NOMINAL DIAMETER STEEL CONDUIT.
- E. MAXIMUM 4" NOMINAL DIAMETER EMT.

3 MINIMUM 5/8" DEPTH HILTI CP 606 FLEXIBLE FIRESTOP SEALANT.

4 MINIMUM 1/2" BEAD HILTI CP 606 FLEXIBLE FIRESTOP SEALANT AT POINT OF CONTACT.

2 CONDUIT THROUGH CONCRETE WALL FIRESTOP ASSEMBLY DETAIL

NO SCALE

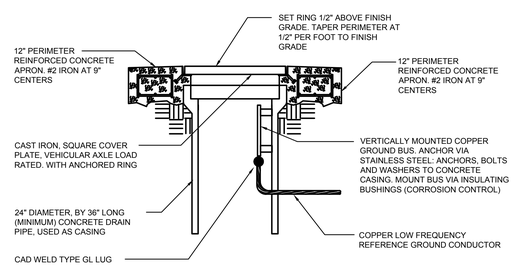

5 EXTERIOR GROUND BUSBAR

NO SCALE

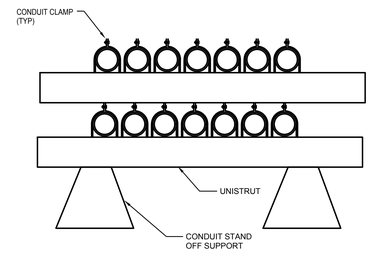

8 CONDUIT GROUND PATHWAY

NO SCALE

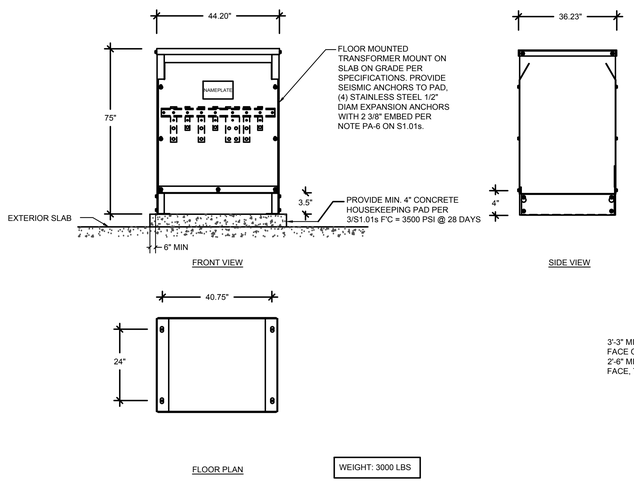

WEIGHT: 3000 LBS

3 FLOOR MOUNTED TRANSFORMER DETAIL

NO SCALE

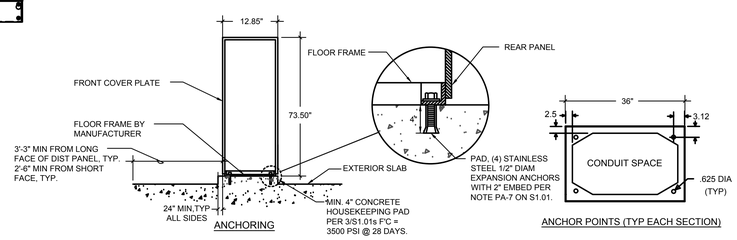

WEIGHT: 1000 LBS

6 DISTRIBUTION PANEL SUPPORT DETAIL

NO SCALE

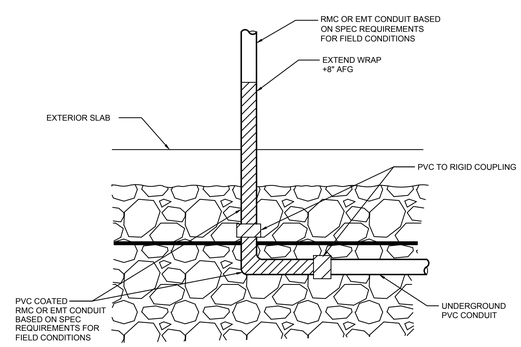

9 CONDUIT TRANSITION DETAIL

NO SCALE

IDENTIFICATION STAMP
DIV. OF THE STATE ARCHITECT
APP: 01-119031 INC:
REVIEWED FOR
SS ☑ FLS ☑ ACS ☑
DATE: 10/22/2020

LPAS

2484 Natomas Park Drive Suite 100 Sacramento CA 95833
916 443 0335 lpasdesign.com Architecture + Design

LAS POSITAS TEMPORARY FACULTY VILLAGE MODULAR OFFICES

LAS POSITAS COMMUNITY COLLEGE
LIVERMORE, CA

ARCHITECT'S STAMP APPROVAL

THIS DOCUMENT CONTAINS INFORMATION THAT IS PROPRIETARY TO LPAS, INC. AND IS FURNISHED FOR THE PURPOSES OF REVIEW, BIDDING OR CONSTRUCTION OF THE PROJECT LISTED IN THE JOB TITLE BOX ABOVE AND SHALL NOT BE USED FOR ANY OTHER PURPOSE OR RELEASED TO ANY OTHER PARTY WITHOUT THE WRITTEN CONSENT OF LPAS, INC. INFORMATION CONTAINED HEREIN IS AN INSTRUMENT OF PROFESSIONAL SERVICES AND SHALL REMAIN THE PROPERTY OF LPAS, INC. ALL RIGHTS RESERVED COPYRIGHT © 2006

THIS DRAWING IS NOT FINAL OR TO BE USED FOR CONSTRUCTION UNTIL IT IS SIGNED BY THE ARCHITECT AND ENGINEER.

CONSULTANT

REGISTERED PROFESSIONAL ENGINEER THOMAS B. JUN No. E19320 ELECTRICAL STATE OF CALIFORNIA
Date Signed: 8/27/20

INTERFACE ENGINEERING
PROJECT 2020-0001
CONTACT Thomas Jun
135 Main Street, Suite 400
San Francisco, CA 94105
TEL 415.489.7240
www.interfaceengineering.com

DETAILS - ELECTRICAL

PROJECT NO: 2020-0001
DATE: 2020-08-28

SHEET NO:

E5.10s

FOR CONSTRUCTION

FIRE ALARM SYMBOL LIST

Abbreviations

(E) EXISTING
(N) NEW
(R) RELOCATE/RELOCATED
(X) DEMOLISH

C CONDUIT

DACT DIGITAL ALARM COMMUNICATING TRANSMITTER

EOL END OF LINE COMPONENT

FAA FIRE ALARM ANNUNCIATOR
FACP FIRE ALARM CONTROL PANEL
FTC FIRE TERMINAL CABINET

NAC NOTIFICATION APPLIANCE CIRCUIT

SLC SIGNALING LINE CIRCUIT

WG WIREGUARD
WP WEATHERPROOF

Fire Alarm

INX# — FIRE ALARM CONTROL PANEL (# INDICATES THE NODE DESIGNATION)
FCI INX - CSFM# 6911-1703:0118

NAC — NOTIFICATION APPLIANCE CIRCUIT PANEL
FCI HPF24S8 - CSFM# 7315-1637:0102

PULL STATION
FCI MS-7AF - CSFM# 7150-1703:0109

SMOKE DETECTOR
FCI (SMOKE HEAD) ASD-PL3 - CSFM# 7272-1703:501
FCI (DETECTOR BASE) B210LP - CSFM# 7300-1653:0109

SPEAKER
WHEELOCK E70-W - CSFM# 7320-0785:0134

SPEAKER/STROBE COMBINATION (# INDICATES MINIMUM CANDELA RATING)
WHEELOCK ET70-24MCW-FW - CSFM# 7125-0785:146
WHEELOCK ET70WP-2475-FW - CSFM# 7125-0785:146

AOM — ADDRESSABLE OUTPUT MODULE
FCI AOM-2SF - CSFM# 7300-1703:0102

JUNCTION BOX

General

X/X — DETAIL NUMBER AND SHEET LOCATION

1 — KEYED NOTE

FIRE ALARM SYSTEM OPERATIONAL MATRIX

LPC BDLG TEMP VILLAGE

CAUSE	EFFECT: ALARM AT MUN INX	ALARM AT INX & MAIN CAMPUS HEAD END	INITIATE PRIMARY LEVEL ELEVATOR RECALL	INITIATE ALTERNATE LEVEL ELEVATOR RECALL	ELEVATOR SIGNAL IN CAR	ELEVATOR POWER SHUNT TRIP	RELEASE MAGNETICALLY HELD SMOKE DOORS	ASSOCIATED SUPPLY FAN SHUT DOWN	SIGNAL TO BAS	ASSOCIATED FSD CLOSURE	EXTERIOR SPRINKLER BELL	ALARM AT INX	ALARM AT CAMPUS WIDE HEAD END	ACTIVATE AUDIBLE ALARM NOTIFICATION	ACTUATE VISUAL ALARM NOTIFICATION	TROUBLE AT INX	TROUBLE AT INX & MAIN CAMPUS HEAD END	TROUBLE AT INX & MAIN CAMPUS HEAD END	TROUBLE AT INX & MAIN CAMPUS HEAD END	SUPERVISORY AT INX & MAIN CAMPUS HEAD END	SUPERVISORY AT INX & MAIN CAMPUS HEAD END	SUPERVISORY AT INX & MAIN CAMPUS HEAD END	SUPERVISORY AT INX & MAIN CAMPUS HEAD END	DEACTIVATE AUDIBLE ALARM NOTIFICATION	DEACTIVATE VISUAL ALARM NOTIFICATION	INX SYSTEM RESET
HEAT DETECTOR	●	●										●	●	●	●											
SMOKE DETECTOR	●	●										●	●	●	●											
MANUAL PULL STATION	●	●										●	●	●	●											
SIGNAL SILENCE																							●			
SYSTEM RESET																							●	●		●
POWER FAILURE																●	●	●								
FIRE ALARM TROUBLE																●	●	●								

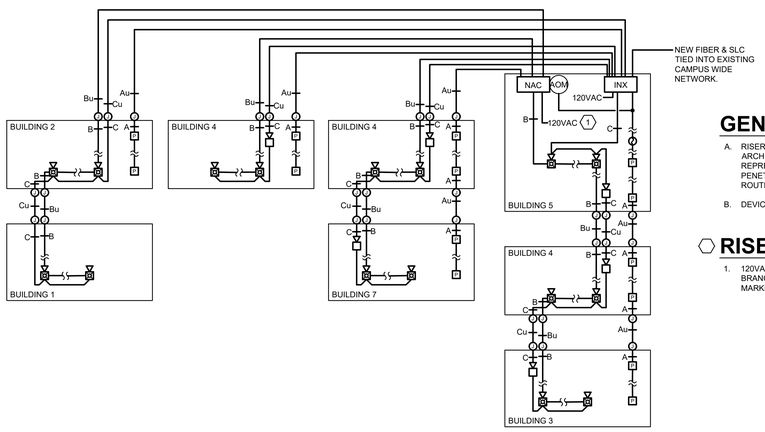

GENERAL RISER NOTES

A. RISER IS A DIAGRAMMATICAL REPRESENTATION OF THE SYSTEM ARCHITECTURE IN BUILDING CROSS SECTION. IT IS NOT INTENDED TO REPRESENT ACTUAL WIRE RUNS, PANEL CONFIGURATIONS OR PENETRATIONS. REFER TO FLOOR PLANS AND PANEL DETAILS FOR CIRCUIT ROUTING AND CONFIGURATION INFORMATION.

B. DEVICES ARE TYPICAL. SEE FLOOR PLANS FOR QUANTITY & LOCATIONS

RISER KEYNOTES

1. 120VAC PRIMARY POWER SOURCE TO BE A MECHANICALLY PROTECTED BRANCH CIRCUIT. THE CIRCUIT DISCONNECTING MEANS TO HAVE A RED MARKING, AND IDENTIFIED AS "FIRE ALARM CIRCUIT".

DSA NOTES

1. APPLICABLE STANDARDS AND CODES:
   2016 NFPA 72
   2019 CALIFORNIA FIRE CODE
   2019 CALIFORNIA BUILDING CODE
   2019 CALIFORNIA MECHANICAL CODE
   2019 CALIFORNIA ELECTRICAL CODE
2. INSTALLATION OF THE SYSTEM SHALL NOT BE STARTED UNTIL DETAILED DESIGN DOCUMENTS AND SPECIFICATIONS, INCLUDING STATE FIRE MARSHAL LISTING NUMBERS FOR EACH COMPONENT OF THE SYSTEM HAVE BEEN APPROVED BY DSA.
3. UPON COMPLETION OF THE INSTALLATION OF THE SYSTEM, A SATISFACTORY TEST OF THE ENTIRE SYSTEM SHALL BE MADE IN THE PRESENCE OF A DSA PROJECT INSPECTOR.
4. A STAMPED SET OF APPROVED FIRE ALARM DESIGN DOCUMENTS SHALL BE MAINTAINED ON THE JOB SITE AND USED FOR INSTALLATION.
5. ANY DISCREPANCIES BETWEEN THE DRAWINGS AND THE CODE OR RECOGNIZED STANDARDS SHALL BE BROUGHT TO THE ATTENTION OF DSA AND THE ARCHITECT/ENGINEER OF THE PROJECT.
6. DSA, ARCHITECT/ENGINEER AND OWNER SHALL BE NOTIFIED A MINIMUM OF 48 HOURS PRIOR TO THE FINAL INSPECTION AND /OR TESTING.
7. ALL PENETRATIONS THROUGH RATED ASSEMBLIES REQUIRING OPENING PROTECTION SHALL BE PROVIDED WITH A PENETRATION FIRE STOP SYSTEM AS IDENTIFIED IN CBC CHAPTER 7, UL OR OTHER LAB TESTING CRITERIA.
8. WALL MOUNTED VISUAL NOTIFICATION APPLIANCES SHALL HAVE THEIR BOTTOMS MOUNTED AT 80" MINIMUM AND 96" MAXIMUM ABOVE FINISHED FLOOR.
9. WALL MOUNTED AUDIBLE NOTIFICATION APPLIANCES SHALL HAVE THEIR TOPS MOUNTED AT 90" MINIMUM AND 100" MAXIMUM ABOVE FINISHED FLOOR AND NO CLOSER THEN 6" TO A HORIZONTAL STRUCTURE.
10. AUDIBLE APPLIANCES SHALL PROVIDE A SOUND PRESSURE LEVEL OF 15 dB ABOVE THE AVERAGE AMBIENT SOUND LEVEL OR 5 dB ABOVE THE MAXIMUM SOUND LEVEL HAVING A DURATION OF AT LEAST 60 SECONDS, WHICHEVER IS GREATER, IN EVERY OCCUPIABLE SPACE WITHIN THE BUILDING.
11. AUDIBLE APPLIANCES SHALL BE SYNCHRONIZED TEMPORAL CODE 3 PATTERN.
12. THE CONTRACTOR SHALL ADJUST/INSTALL ALL DEVICES TO MAXIMIZE PERFORMANCE AND TO MINIMIZE FALSE ALARMS.
13. VISUAL APPLIANCES SHOULD NOT EXCEED 2 FLASHES PER SECOND AND SHOULD NOT BE SLOWER THAN 1 FLASH EVERY SECOND. THE DEVICE SHALL HAVE A PULSING LIGHT SOURCE NOT LESS THAN 15 CANDELA. VISUAL APPLIANCES WITHIN 55' FROM EACH OTHER SHALL BE SYNCHRONIZED.
14. UNDERGROUND AND EXTERIOR CONDUITS TO HAVE WATERTIGHT FITTINGS AND WIRE TO BE APPROVED FOR WET LOCATIONS.
15. ALL FIRE ALARM WIRING SHALL BE FLP OR FPLP (FIRE POWER LIMITED OR FIRE POWER LIMITED PLENUM) AS REQUIRED FOR APPLICATION. WIRING IN CONDUIT ABOVE GROUND MAY BE THHN OR THWN.
16. PER CEC STANDARDS, ALL WIRING IS TO BE PULLED THROUGH EACH JUNCTION BOX AND CONNECTED DIRECTLY TO EACH FIRE DEVICE. DO NOT SPLICE THE WIRE. THERE MUST BE AT LEAST 6" OF LEAD WIRE FROM THE BOX TO THE DEVICE. ALL BOXES TO BE SIZED PER CEC.
17. SMOKE DETECTORS SHALL NOT BE INSTALLED CLOSER THAN 1' FROM FIRE SPRINKLERS OR 3' FROM ANY SUPPLY DIFFUSER. IN AREA OF CONSTRUCTION OR POSSIBLE DAMAGE/CONTAMINATION, NEWLY INSTALLED FIRE ALARM DEVICES SHALL BE COVERED UNTIL THAT AREA IS READY TO BE TURNED OVER TO THE OWNER.
18. ALL FIRE ALARM CIRCUITS SHALL BE IN CONDUIT, SURFACE RACEWAY OR OPEN RUN ABOVE CEILINGS, UNDER FLOORS AND IN WALLS IN A NEAT AND PROTECTED MANNER AS INDICATED ON DESIGN DOCUMENTS. EXPOSED CIRCUITS ARE ONLY PERMITTED WHEN NOTED AS EXPOSED ON DESIGN DOCUMENTS.
19. FIRE ALARM PANEL, REMOTE PANELS, POWER SUPPLIES, AND COMPONENTS SHALL BE SECURED TO MOUNTING SURFACES PER MANUFACTURER'S SPECIFICATIONS. NO SINGLE DEVICE SHALL EXCEED THE WEIGHT OF 20 LBS. WITHOUT SPECIAL MOUNTING DETAILS.
20. A DEDICATED BRANCH CIRCUIT SHALL BE PROVIDED FOR FIRE ALARM EQUIPMENT. THIS CIRCUIT SHALL BE ENERGIZED FROM THE COMMON USE AREA PANEL AND SHALL HAVE NO OTHER OUTLETS. THE BREAKER SHALL HAVE A RED LOCKING DEVICE TO BLOCK THE HANDLE IN THE "ON" POSITION. THE CIRCUIT BREAKER SHALL BE LABELED "FIRE ALARM CIRCUIT CONTROL." CIRCUIT ID TO BE LABELED AT FIRE PANEL/ EXTENDERS.
21. THE INSTALLING CONTRACTOR SHALL PROVIDE A RECORD OF COMPLETION PER NFPA 72, FIGURE 10.18.2.1.1.
22. CONTROL PANELS AND REMOTE ANNUNCIATORS SHALL BE INSTALLED WITH THEIR BOTTOMS MOUNTED AT 48" ABOVE FINISHED FLOOR.
23. THE INSTALLING CONTRACTOR SHALL PROVIDE SYSTEM PROGRAMMING FOR SUPERVISORY MONITORING PER CBC SECTION 901.6.2.
24. SUPERVISORY MONITORING SHALL BE TESTED AND VERIFIED AS SENDING CORRECT SIGNALS IN CONJUNCTION WITH FINAL ACCEPTANCE TEST.
25. OWNER SHALL BE RESPONSIBLE FOR ESTABLISHING A FIRE SYSTEM MONITORING CONTRACT OR PROVISIONS.

FIRE ALARM ADDRESS LEGEND

INITIATION

L#-## — DEVICE ADDRESS

WHERE: L# = LOOP NUMBER
= DEVICE ADDRESS

NOTIFICATION

S#-#
R#-# — DEVICE LABELING

WHERE: S# = SPEAKER CKT NUMBER
= DEVICE LABEL
R# = STROBE CKT NUMBER
= DEVICE LABEL

FIRE ALARM MONITORING NOTE

FIRE ALARM SYSTEMS SHALL TRANSMIT THE ALARM, SUPERVISORY, AND TROUBLE SIGNALS TO AN APPROVED SUPERVISING STATION IN ACCORDANCE WITH NFPA 72. THE SUPERVISING STATIONS SHALL BE LISTED AS EITHER UUFX (CENTRAL STATIONS) OR UUJS (REMOTE AND PROPRIETARY) BY UNDERWRITERS LABORATORY (UL) OR SHALL MEET THE REQUIREMENTS OF FACTORY MUTUAL (FM) RESEARCH APPROVAL STANDARD 3011.

FIRE ALARM WIRE SCHEDULE

SYMBOL	DESCRIPTION
A	1 PAIR 16 AWG TWISTED (SLC)
Au	1 PAIR 16 AWG TWISTED/SHIELDED (SLC - RATED FOR DIRECT BURIAL/UNDERGROUND CONDUIT)
B	1 PAIR 12 AWG (STROBE CIRCUIT)
Bu	1 PAIR 12 AWG TWISTED/SHIELDED (STROBE CIRCUIT - RATED FOR DIRECT BURIAL/UNDERGROUND CONDUIT)
C	1 PAIR 18 AWG TWISTED/SHIELDED (SPEAKER CIRCUIT)
Cu	1 PAIR 18 AWG TWISTED/SHIELDED (SPEAKER CIRCUIT - RATED FOR DIRECT BURIAL/UNDERGROUND CONDUIT)

GENERAL FIRE ALARM NOTES

A. THE SCOPE OF THIS PROJECT IS TO PROVIDE AN EXPANSION OF THE EXISTING MANUAL AND AUTOMATIC, CLASS B, ADDRESSABLE FIRE ALARM SYSTEM IN THE TEMPORARY VILLAGE TRAILERS.
B. MANUAL PULL STATIONS ARE PROVIDED AT EACH BUILDING EXIT.
C. AUTOMATIC SMOKE DETECTORS ARE PROVIDED TO PROTECT FIRE ALARM EQUIPMENT.
D. AUDIBLE AND VISIBLE NOTIFICATION APPLIANCES ARE LOCATED THROUGHOUT THE BUILDING.

SHEET INDEX

FA0.01 SYMBOLS LIST AND GENERAL NOTES - FIRE ALARM
FA2.10 FIRST FLOOR PLAN - FIRE ALARM
FA3.10 CALCULATIONS & MOUNTING DETAILS - FIRE ALARM

IDENTIFICATION STAMP
DIV. OF THE STATE ARCHITECT
APP: 01-119031 INC:
REVIEWED FOR
SS ☑ FLS ☑ ACS ☑
DATE: 10/22/2020

LPAS
2484 Natomas Park Drive Suite 100 Sacramento CA 95833
916 443 0335 lpasdesign.com Architecture + Design

LAS POSITAS TEMPORARY FACULTY VILLAGE MODULAR OFFICES

LAS POSITAS COMMUNITY COLLEGE
LIVERMORE, CA

ARCHITECT'S STAMP APPROVAL

THIS DOCUMENT CONTAINS INFORMATION THAT IS PROPRIETARY TO LPAS, INC. AND IS FURNISHED FOR THE PURPOSES OF REVIEW, BIDDING OR CONSTRUCTION OF THE PROJECT LISTED IN THE JOB TITLE BOX ABOVE AND SHALL NOT BE USED FOR ANY OTHER PURPOSE OR RELEASED TO ANY OTHER PARTY WITHOUT THE WRITTEN CONSENT OF LPAS, INC. INFORMATION CONTAINED HEREIN IS AN INSTRUMENT OF PROFESSIONAL SERVICES AND SHALL REMAIN THE PROPERTY OF LPAS, INC. ALL RIGHTS RESERVED COPYRIGHT © 2009.

THIS DRAWING IS NOT FINAL OR TO BE USED FOR CONSTRUCTION UNTIL IT IS SIGNED BY THE ARCHITECT AND ENGINEER.

CONSULTANT

REGISTERED PROFESSIONAL ENGINEER
THOMAS B. JUNG
No. E19320
ELECTRICAL
STATE OF CALIFORNIA
Date Signed: 9/24/20

INTERFACE ENGINEERING
PROJECT 2020-0001
CONTACT JJ Johnson
135 Main Street, Suite 400
San Francisco, CA 94105
TEL 415.489.7240
www.interfaceengineering.com

SYMBOL LIST, GENERAL NOTES - FIRE ALARM

PROJECT NO: 2020-0001
DATE: 2020-08-28

SHEET NO:
FA0.01

FOR CONSTRUCTION

GENERAL SHEET NOTES

A. FIELD VERIFY ADDRESS AND LOOP USED FOR ALL ADDRESSABLE INITIATING DEVICES. DOCUMENT ON REDLINES FOR AS-BUILTS

SHEET KEYNOTES

1. CONDUIT TO BE LOCATED BETWEEN TRAILERS FOR FIRE ALARM WIRE RUNS. COORDINATE WITH TECHNOLOGY DRAWING T1.10.
2. FIBER & SLC TO TIE INTO EXISTING CAMPUS WIDE FIRE ALARM NETWORK. COORDINATE WITH TECHNOLOGY DRAWING T1.10.
3. CONDUIT TO BE RAN OVERHEAD IN WALKWAY ROOF.
4. CONDUIT TO BE LOCATED BETWEEN TRAILERS FOR FIRE ALARM WIRE RUNS. SEE DETAIL 8 ON TECHNOLOGY DRAWINGS T3.20 FOR DETAILS.

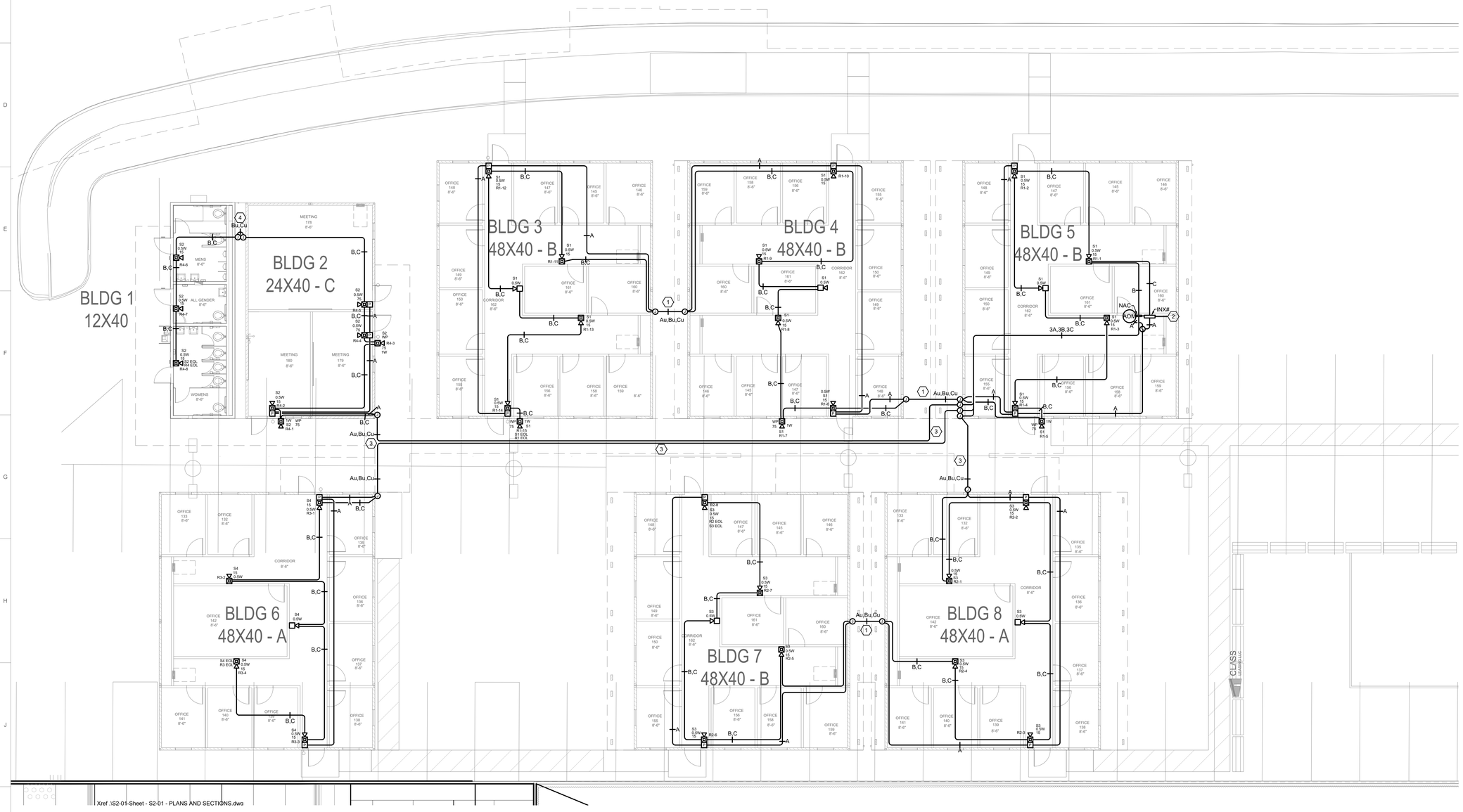

1 FIRST FLOOR PLAN - FIRE ALARM

0 4' 8' 16'

SCALE: 1/8"=1'-0"

IDENTIFICATION STAMP
DIV. OF THE STATE ARCHITECT
APP: 01-119031 INC:
REVIEWED FOR
SS ☑ FLS ☑ ACS ☑
DATE: 10/22/2020

LPAS

2484 Natomas Park Drive Suite 100 Sacramento CA 95833
916 443 0335 lpasdesign.com Architecture + Design

LAS POSITAS
TEMPORARY FACULTY
VILLAGE MODULAR
OFFICES

LAS POSITAS COMMUNITY COLLEGE
LIVERMORE, CA

ARCHITECT'S STAMP APPROVAL

THIS DOCUMENT CONTAINS INFORMATION THAT IS PROPRIETARY TO LPAS, INC. AND IS FURNISHED FOR THE PURPOSES OF REVIEW, BIDDING OR CONSTRUCTION OF THE PROJECT LISTED IN THE JOB TITLE BOX ABOVE AND SHALL NOT BE USED FOR ANY OTHER PURPOSE OR RELEASED TO ANY OTHER PARTY WITHOUT THE WRITTEN CONSENT OF LPAS, INC. INFORMATION CONTAINED HEREIN IS AN INSTRUMENT OF PROFESSIONAL SERVICES AND SHALL REMAIN THE PROPERTY OF LPAS, INC. ALL RIGHTS RESERVED COPYRIGHT © 2009.

THIS DRAWING IS NOT FINAL OR TO BE USED FOR CONSTRUCTION UNTIL IT IS SIGNED BY THE ARCHITECT AND ENGINEER.

CONSULTANT

REGISTERED PROFESSIONAL ENGINEER
THOMAS B. JUNG
No. E19320
ELECTRICAL
STATE OF CALIFORNIA
Date Signed: 9/24/20

INTERFACE ENGINEERING
PROJECT 2020-0001
CONTACT JJ Johnson
135 Main Street, Suite 400
San Francisco, CA 94105
TEL 415.489.7240
www.interfaceengineering.com

FIRST FLOOR PLAN - FIRE ALARM

PROJECT NO: 2020-0001
DATE: 2020-08-28

SHEET NO:

FA2.10

FOR CONSTRUCTION

INX # (TEMP VILLAGE)

Module	Qty	Description	Standby Current	Total Standby	Alarm Current	Total Alarm
Panel Equipment						
INI-VGX	1	Intel. Network Voice Gateway (INI-VGX)	0.1500	0.1500	0.1500	0.1500
AM-50	2	Amplifier Sub-assembly, 50 watt 70V (AM-50-70)	0.0490	0.0980	2.3000	4.6000
PM-9	1	120V Power Supply Sub-Assembly (PM-9)	0.0500	0.0500	0.0500	0.0500
AOM-2SF	2	Addressable Output Module-Signal (AOM-2SF)	0.0020	0.0040	0.0065	0.0130
		Panel Totals		**0.3020**		**4.8130**
		Peripheral Totals		**0.0000**		**0.0000**
			Total Standby	**0.3020**	**Total Alarm**	**4.8130**

Battery Set #1 (Cabinet/Charger #1)			Standby Total	Alarm Total
		Total	**0.3020**	**4.8130**
Standby Time =	24 Hrs	x 0.3020	= 7.2480 Standby Ah	
Alarm Time =	15 Min	x 4.8130 x (1/60)	= 1.2033 Alarm Ah	
			8.4513	
Additional Spare Capacity =	0%	+	0.0000	
			8.4513	
Battery Discharge Factor per NFPA 72 2010 =	20%	+	1.6903	
Minimum Battery Required	**2081-9288 12.7AH**		**10.1415**	
Battery Supplied	**2081-9275 18AH**			

	Amplifier Wattage	Watts Used	% Used
Amp-1	**50**	23.W	46.00%

Amp 1 - Speaker Db Loss Calculations

***Circuit Voltage = 70vrms [Et]** — **Amp Wattage Capacity** 50

SPEAKER CIRCUIT DESCRIPTION	Plan Circuit Number	Speaker Tap 25 Watt	Speaker Tap .5 Watt	Speaker Tap 1. Watt	Total Watts [P]	Wire Gauge	Est. Ckt. Length [ft]	Wire Resistance [Rw]	Circuit Resistance [Rt=D*Rw]	Speaker Current [I=P/Et]	Speaker Resistance [Rs=Et/I]	Voltage At End [Ex=(Et*Rs)/(Rs+Rt)]	Watts At End [Px=(Ex)2/Rs]	MAXIMUM -3 dB DROP Actual dB Loss [dB=Log10(Ex/P)*10]	Max Allowable Ckt. Length [ML=(0.414*Rs)/Rw]
BLDG 3, 4 & 5 SPEAKERS	S1		15	3	10.5 Watts	18ga	600 ft.	0.0155	9.324	0.150	466.667	68.629	10.093	-.17 db	12432 ft.
BUILDING 1 & 2 SPEAKERS	S2		6	2	5. Watts	18ga	400 ft.	0.0155	6.216	0.071	980.000	69.559	4.937	-.05 db	26108 ft.
BLDG 7 & 8 SPEAKERS	S3		10		5. Watts	18ga	500 ft.	0.0155	7.770	0.071	980.000	69.449	4.922	-.07 db	26108 ft.
BUILDING 6 SPEAKERS	S4		5		2.5 Watts	18ga	500 ft.	0.0155	7.770	0.036	1960.000	69.724	2.480	-.03 db	52216 ft.

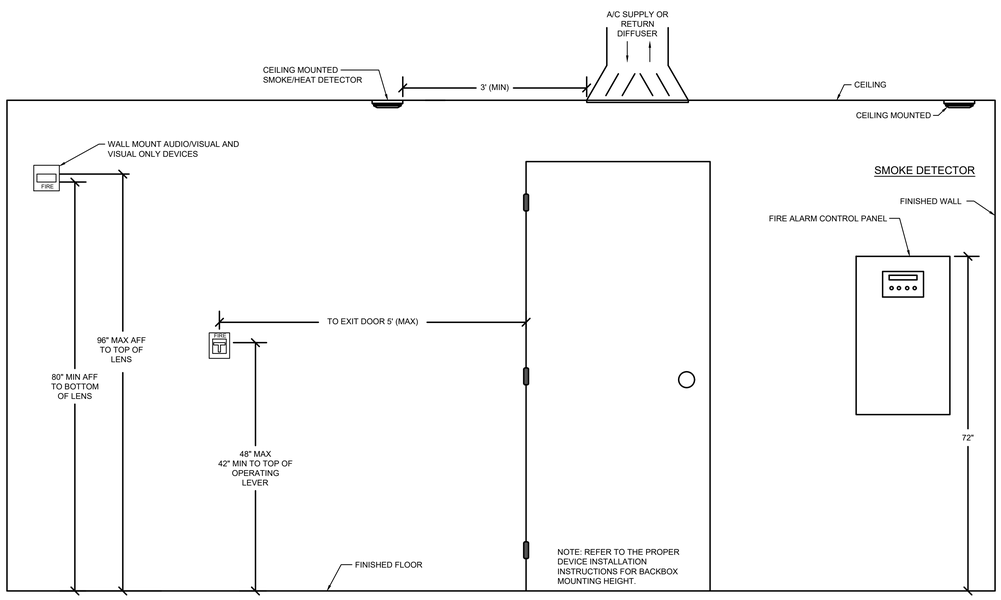

DEVICE MOUNTING HEIGHTS

NO SCALE — Device Mounting Heights

RPS - TEMP VILLAGE (BUILDING 5)

Module	Qty	Description	Standby Current	Total Standby	Alarm Current	Total Alarm
Panel Equipment						
HPF24S8	1	GAMEWELL-FCI 8 AMP POWER SUPPLY	0.0910	0.0910	0.0145	0.0145
		Panel Totals		**0.0910**		**0.0145**
Notification Devices						
ET70-24MCW-FW	28	MULTI CD SPKR STR, WM, WHT (15cd) 15	0.0000	0.0000	0.0650	1.8200
ET70-24MCW-FW	2	MULTI CD SPKR STR, WM, WHT (75cd) 75	0.0000	0.0000	0.1650	0.3300
ET70WP-2475W-FW	5	WEATHERPROOF SPK STRB WHITE 75	0.0000	0.0000	0.1380	0.6900
		Peripheral Totals		**0.0000**		**2.8400**
			Total Standby	**0.0910**	**Total Alarm**	**2.8545**

Battery Set #1 (Cabinet/Charger #1)			Standby Total	Alarm Total
		Total	**0.0910**	**2.8545**
Standby Time =	24 Hrs	x 0.0910	= 2.1840 Standby Ah	
Alarm Time =	15 Min	x 2.8545 x (1/60)	= 0.7136 Alarm Ah	
			2.8976	
Additional Spare Capacity =	0%	+	0.0000	
			2.8976	
Battery Discharge Factor per NFPA 72 2010 =	20%	+	0.5795	
Minimum Battery Required	**2081-9272 6.2 AH**		**3.4772**	
Battery Supplied	**2081-9272 6.2 AH**			

VOLTAGE DROP SUMMARY

Plan Circuit	Description		Load	% Drop
R1	BLDG 3, 4 & 5 STROBES	SIG1	1.194A	6.76%
R2	BLDG 7 & 8 STROBES	SIG2	0.520A	2.99%
R3	BLDG 6 STROBES	SIG3	0.260A	1.67%
R4	BLDG 1 & 2 STROBES	SIG4	0.866A	5.37%

R1 — Distributed Load Voltage Drop

Allowable % Drop: 22% — Wire Gauge: 12ga — Starting Voltage: 20vdc
2x Wire Resistance: 0.0039 — Min. Device Voltage: 16vdc — % Voltage Drop: 6.76%

Device #	PID	Candela	Distance (feet)	Normal Operation: Device Current	Voltage Drop	Voltage At Device
R1-1	ET70-24MCW-FW	15cd	25	0.065	0.115	20.28
R1-2	ET70-24MCW-FW	15cd	33	0.065	0.259	20.14
R1-3	ET70-24MCW-FW	15cd	45	0.065	0.444	19.96
R1-4	ET70-24MCW-FW	15cd	36	0.065	0.583	19.82
R1-5	ET70WP-2475W-FW	75cd	20	0.138	0.655	19.75
R1-6	ET70-24MCW-FW	15cd	55	0.065	0.824	19.58
R1-7	ET70WP-2475W-FW	75cd	28	0.138	0.903	19.50
R1-8	ET70-24MCW-FW	15cd	35	0.065	0.983	19.42
R1-9	ET70-24MCW-FW	15cd	38	0.065	1.060	19.34
R1-10	ET70-24MCW-FW	15cd	38	0.065	1.128	19.27
R1-11	ET70-24MCW-FW	15cd	80	0.065	1.251	19.15
R1-12	ET70-24MCW-FW	15cd	33	0.065	1.294	19.11
R1-13	ET70-24MCW-FW	15cd	45	0.065	1.340	19.06
R1-14	ET70-24MCW-FW	15cd	37	0.065	1.369	19.03
R1-15	ET70WP-2475W-FW	75cd	20	0.138	1.380	19.02
		Totals:	568 Ft	1.194A		

R2 — Distributed Load Voltage Drop

Allowable % Drop: 22% — Wire Gauge: 12ga — Starting Voltage: 20vdc
2x Wire Resistance: 0.0039 — Min. Device Voltage: 16vdc — % Voltage Drop: 2.99%

Device #	PID	Candela	Distance (feet)	Normal Operation: Device Current	Voltage Drop	Voltage At Device
R2-1	ET70-24MCW-FW	15cd	160	0.065	0.321	20.08
R2-2	ET70-24MCW-FW	15cd	35	0.065	0.383	20.02
R2-3	ET70-24MCW-FW	15cd	50	0.065	0.458	19.94
R2-4	ET70-24MCW-FW	15cd	35	0.065	0.502	19.90
R2-5	ET70-24MCW-FW	15cd	50	0.065	0.552	19.85
R2-6	ET70-24MCW-FW	15cd	36	0.065	0.579	19.82
R2-7	ET70-24MCW-FW	15cd	45	0.065	0.602	19.80
R2-8	ET70-24MCW-FW	15cd	33	0.065	0.610	19.79
		Totals:	444 Ft	0.520A		

R3 — Distributed Load Voltage Drop

Allowable % Drop: 22% — Wire Gauge: 12ga — Starting Voltage: 20vdc
2x Wire Resistance: 0.0039 — Min. Device Voltage: 16vdc — % Voltage Drop: 1.67%

Device #	PID	Candela	Distance (feet)	Normal Operation: Device Current	Voltage Drop	Voltage At Device
R3-1	ET70-24MCW-FW	15cd	280	0.065	0.281	20.12
R3-2	ET70-24MCW-FW	15cd	35	0.065	0.307	20.09
R3-3	ET70-24MCW-FW	15cd	50	0.065	0.332	20.07
R3-4	ET70-24MCW-FW	15cd	33	0.065	0.341	20.06
		Totals:	398 Ft	0.260A		

R4 — Distributed Load Voltage Drop

Allowable % Drop: 22% — Wire Gauge: 12ga — Starting Voltage: 20vdc
2x Wire Resistance: 0.0039 — Min. Device Voltage: 16vdc — % Voltage Drop: 5.37%

Device #	PID	Candela	Distance (feet)	Normal Operation: Device Current	Voltage Drop	Voltage At Device
R4-1	ET70WP-2475W-FW	75cd	250	0.138	0.836	19.56
R4-2	ET70-24MCW-FW	15cd	15	0.065	0.878	19.52
R4-3	ET70WP-2475W-FW	75cd	40	0.138	0.980	19.42
R4-4	ET70-24MCW-FW	75cd	15	0.165	1.011	19.39
R4-5	ET70-24MCW-FW	75cd	20	0.165	1.038	19.36
R4-6	ET70-24MCW-FW	15cd	55	0.065	1.080	19.32
R4-7	ET70-24MCW-FW	15cd	20	0.065	1.090	19.31
R4-8	ET70-24MCW-FW	15cd	20	0.065	1.095	19.31
		Totals:	435 Ft	0.866A		

IDENTIFICATION STAMP
DIV. OF THE STATE ARCHITECT
APP: 01-119031 INC:
REVIEWED FOR
SS ☑ FLS ☑ ACS ☑
DATE: 10/22/2020

LPAS
2484 Natomas Park Drive Suite 100 Sacramento CA 95833
916 443 0335 lpasdesign.com Architecture + Design

LAS POSITAS TEMPORARY FACULTY VILLAGE MODULAR OFFICES

LAS POSITAS COMMUNITY COLLEGE
LIVERMORE, CA

ARCHITECT'S STAMP — APPROVAL

THIS DOCUMENT CONTAINS INFORMATION THAT IS PROPRIETARY TO LPAS, INC. AND IS FURNISHED FOR THE PURPOSES OF REVIEW, BIDDING OR CONSTRUCTION OF THE PROJECT LISTED IN THE JOB TITLE BOX ABOVE AND SHALL NOT BE USED FOR ANY OTHER PURPOSE OR RELEASED TO ANY OTHER PARTY WITHOUT THE WRITTEN CONSENT OF LPAS, INC. INFORMATION CONTAINED HEREIN IS AN INSTRUMENT OF PROFESSIONAL SERVICES AND SHALL REMAIN THE PROPERTY OF LPAS, INC. ALL RIGHTS RESERVED COPYRIGHT © 2009.

THIS DRAWING IS NOT FINAL OR TO BE USED FOR CONSTRUCTION UNTIL IT IS SIGNED BY THE ARCHITECT AND ENGINEER.

CONSULTANT

REGISTERED PROFESSIONAL ENGINEER — THOMAS B. JUN — No. E19320 — ELECTRICAL — STATE OF CALIFORNIA
Date Signed: 9/24/20

INTERFACE ENGINEERING
PROJECT 2020-0001
CONTACT JJ Johnson
135 Main Street, Suite 400
San Francisco, CA 94105
TEL 415.489.7240
www.interfaceengineering.com

CALCULATIONS - FIRE ALARM

PROJECT NO: 2020-0001
DATE: 2020-08-28

SHEET NO:
FA3.10

FOR CONSTRUCTION

TECHNOLOGY SYMBOL LIST

NOTE: This is a standard symbol list and not all items listed may be used.

Abbreviations

(E)	EXISTING
AFF	ABOVE FINISHED FLOOR
ANMW	GEL-FILLED UNDERGROUND CABLE
ATS	AUTOMATIC TRANSFER SWITCH
AV	AUDIO VISUAL
BC	BARE COPPER
C	CONDUIT
CAT	CATEGORY
CATV	CABLE TELEVISION
CB	CIRCUIT BREAKER
CCTV	CLOSED CIRCUIT TELEVISION
CFCI	CONTRACTOR FURNISHED CONTRACTOR INSTALLED
CFOI	CONTRACTOR FURNISHED OWNER INSTALLED
CNTL	CONTROL
COAX	COAXIAL
COM	COMMUNICATION
CPT	CONTROL POWER TRANSFORMER
CR	CONTROL RELAY
CT	CURRENT TRANSFORMER
E	EMERGENCY
EA	EACH
FA	FIRE ALARM
FACP	FIRE ALARM CONTROL PANEL
FDU	FIBER OPTIC DISTRIBUTION UNIT
FF	FINISH FLOOR
FT	FOOT, FEET
G, GND	GROUND
GRC	GALVANIZED RIGID STEEL CONDUIT
HH	HANDHOLE
IDF	INTERMEDIATE DISTRIBUTION FRAME
IMC	INTERMEDIATE METAL CONDUIT
IN	INCH, INCHES
IT	INFORMATION TECHNOLOGY
LAN	LOCAL AREA NETWORK
LC	FIBER OPTIC CONNECTOR
LV	LOW VOLTAGE
M	MOTOR
MATV	MASTER ANTENNA TELEVISION
MDF	MAIN DISTRIBUTION FRAME
MISC	MISCELLANEOUS
MSB	MAIN SWITCHBOARD
MTS	MANUAL TRANSFER SWITCH
NA	NOT APPLICABLE
NC	NORMALLY CLOSED
NO	NORMALLY OPEN
NTS	NOT TO SCALE
OFCI	OWNER FURNISHED, CONTRACTOR INSTALLED
OFOI	OWNER FURNISHED, OWNER INSTALLED
OSP	OUTSIDE PLANT
PBX	PRIVATE BRANCH EXCHANGE
PNL	PANEL
POE	POWER OVER ETHERNET
PTZ	PAN, TILT, ZOOM
PVC	POLY-VINYL-CHLORIDE
QTY	QUANTITY
RFI	REQUEST FOR INFORMATION
RM	ROOM
SC	FIBER OPTIC CONNECTOR
TBB	TELECOMMUNICATIONS BONDING BACKBONE
TELE	TELEPHONE
TGB	TELECOMMUNICATIONS GROUNDING BUS BAR
TTB	TELEPHONE TERMINAL BOARD
TYP	TYPICAL
UON	UNLESS OTHERWISE NOTED
UPS	UNINTERRUPTABLE POWER SUPPLY
W/	WITH
W/O	WITHOUT
WAN	WIDE AREA NETWORK
WAP	WIRELESS ACCESS POINT
WI-FI	WIRELESS FIDELITY
WP	WEATHERPROOF

Equipment

84" TALL CABINET

MAJOR EQUIPMENT, CABINETS OR PANELS

Raceways

CABLE RUNWAY, WIDTH AS INDICATED

CONDUIT AND CONDUCTORS ABOVE GRADE

CONDUIT AND CONDUCTORS BELOW GRADE OR SLAB

CONDUIT DOWN

CONDUIT SLEEVE

CONDUIT UP

CONDUIT/WIRING CONTINUATION

FLEXIBLE CONDUIT

HH HANDHOLE

PB PULL BOX

VT TELECOMMUNICATIONS VAULT

TELEPHONE BACKBOARD

Reference Symbols

1 XXX DETAIL NUMBER AND SHEET LOCATION

1 KEYED NOTES

A XXX SECTION NUMBER AND SHEET LOCATION

Telecommunications

(X)

STANDARD TELECOMMUNICATIONS OUTLET WITH 5" SQUARE RANDL BACKBOX, SINGLE GANG FACEPLATE AND CAT6A CABLING IN A 1-1/4" C. TO ACCESSIBLE CEILING SPACE (X):

A = (1) VOICE / (1) DATA IN FOUR PORT FACEPLATE, UNUSED PORTS BLANKED.
B = (2) DATA IN FOUR PORT FACEPLATE, UNUSED PORTS BLANKED.
C = (2) VOICE/ (2) DATA IN FOUR PORT FACEPLATE.
D = (4) DATA IN FOUR PORT FACEPLATE.
E = (1) VOICE IN ONE PORT FACEPLATE WITH KNOBS FOR HANGING WALL PHONE.

SEE 1/T3.20 FOR DETAIL.

GENERAL SHEET NOTES

A. COMMUNICATIONS RACEWAYS, TRAYS AND OUTLETS ARE SHOWN DIAGRAMMATICALLY. LOCATIONS ARE APPROXIMATE UNLESS SPECIFICALLY DIMENSIONED. FIELD COORDINATE ALL WORK WITH OTHER TRADES.

B. CONSTRUCTION DETAILS SHOW TYPICAL INSTALLATION. UON, AND APPLY TO ALL COMMUNICATIONS WORK INCLUDED IN THE SUMMARY OF WORK FOR THIS PACKAGE EVEN THOUGH NOT SPECIFICALLY REFERENCED ON THE PLAN DRAWINGS.

C. THE TECHNOLOGY DRAWINGS ARE PART OF A LARGER SET OF DRAWINGS WHICH, WHEN COMPLETE, CONSISTS OF DRAWINGS LISTED BY THE "INDEX OF DRAWINGS". PARTIAL SETS OF DRAWINGS NOT INCLUSIVE OF ALL DISCIPLINES ARE INCOMPLETE AND SHOULD NOT BE DISTRIBUTED OR UTILIZED.

D. INSTALL PULL STRINGS IN ALL CONDUITS AT THE TIME OF CONDUIT AND CABLE INSTALLATION.

E. ALL INFRASTRUCTURE SHALL BE INSTALLED IN ACCORDANCE WITH CLPCCD CABLING INFRASTRUCTURE STANDARDS.

SHEET INDEX

T0.10	SYMBOLS LIST AND GENERAL NOTES - TECHNOLOGY
T1.10	SITE PLAN - TECHNOLOGY
T2.10	FLOOR PLAN - TECHNOLOGY
T3.10	DETAILS AND RISER DIAGRAMS - TECHNOLOGY
T3:20	DETAILS - TECHNOLOGY

IDENTIFICATION STAMP
DIV. OF THE STATE ARCHITECT
APP: 01-119031 INC:
REVIEWED FOR
SS ☑ FLS ☑ ACS ☑
DATE: 10/22/2020

LPAS
2484 Natomas Park Drive Suite 100 Sacramento CA 95833
916 443 0335 lpasdesign.com Architecture + Design

LAS POSITAS
TEMPORARY FACULTY
VILLAGE MODULAR
OFFICES

LAS POSITAS COMMUNITY COLLEGE
LIVERMORE, CA

ARCHITECT'S STAMP APPROVAL

THIS DOCUMENT CONTAINS INFORMATION THAT IS PROPRIETARY TO LPAS, INC. AND IS FURNISHED FOR THE PURPOSES OF REVIEW, BIDDING OR CONSTRUCTION OF THE PROJECT LISTED IN THE JOB TITLE BOX ABOVE AND SHALL NOT BE USED FOR ANY OTHER PURPOSE OR RELEASED TO ANY OTHER PARTY WITHOUT THE WRITTEN CONSENT OF LPAS, INC. INFORMATION CONTAINED HEREIN IS AN INSTRUMENT OF PROFESSIONAL SERVICES AND SHALL REMAIN THE PROPERTY OF LPAS, INC. ALL RIGHTS RESERVED COPYRIGHT © 2009.

THIS DRAWING IS NOT FINAL OR TO BE USED FOR CONSTRUCTION UNTIL IT IS SIGNED BY THE ARCHITECT AND ENGINEER.

CONSULTANT

REGISTERED PROFESSIONAL ENGINEER
THOMAS B. JUN
No. E19320
ELECTRICAL
STATE OF CALIFORNIA

Date Signed: 9/14/20

INTERFACE ENGINEERING
PROJECT 2020-0001
CONTACT Geoff Morrison
135 Main Street, Suite 400
San Francisco, CA 94105
TEL 415.489.7240
www.interfaceengineering.com

SYMBOLS LIST & GENERAL NOTES TECHNOLOGY

PROJECT NO: 2020-0001
DATE: 2020-08-28

SHEET NO:
T0.10

GENERAL SHEET NOTES

A. COORDINATE THE EXACT LOCATION AND MOUNTING HEIGHTS OF TELECOMMUNICATION EQUIPMENTS WITH ARCHITECT PRIOR TO INSTALLATION.

B. CONTRACTOR SHALL REFER TO CLPCCD CABLING INFRASTRUCTURE STANDARDS FOR CONDUIT SWEEPING BEND RADIUS AND TELECOMMUNICATIONS HANDHOLE REQUIREMENTS.

C. PATHWAY FOR NEW UTILITIES IS DIAGRAMMATIC IN NATURE AND DESIGNED TO MINIMIZE UTILITY CONFLICTS. CONTRACTOR SHALL POTHOLE ROUTE TO CONFIRM LOCATION OF EXISTING HYDRONICS AND CONFIRM THE MOST EFFICIENT ROUTE FOR NEW UTILITIES. PRIOR TO POTHOLING, MEET ON-SITE TO REVIEW AND FINALIZE POTHOLE LOCATIONS, PROVIDE UP TO 10 POTHOLES.

D. REFER TO CIVIL DRAWING FOR UTILITY COORDINATION AND ALSO JOINT TRENCH DETAIL SHOWN IN ELECTRICAL E5.10.

SHEET KEYNOTES

1. TELECOMMUNICATIONS HANDHOLE.
2. HAND DIG TRENCH FOR UNDERGROUND PVC CONDUIT. PRIOR TO TRENCHING, CONTRACTOR SHALL COORDINATE WITH CIVIL FOR UNDERGROUND DRY AND WET UTILITIES.
3. (3) - 4" UNDERGROUND CONDUIT.
4. PROVIDE (1) 24" X 24" NEMA 3R ENCLOSURE. NEMA ENCLOSURE WILL BE PLACED BETWEEN CEILING HEIGHT AND ROOF TO MODULAR SO CONDUITS CAN STUB FROM THE BACK OF THE ENCLOSURE ABOVE THE T-BAR.

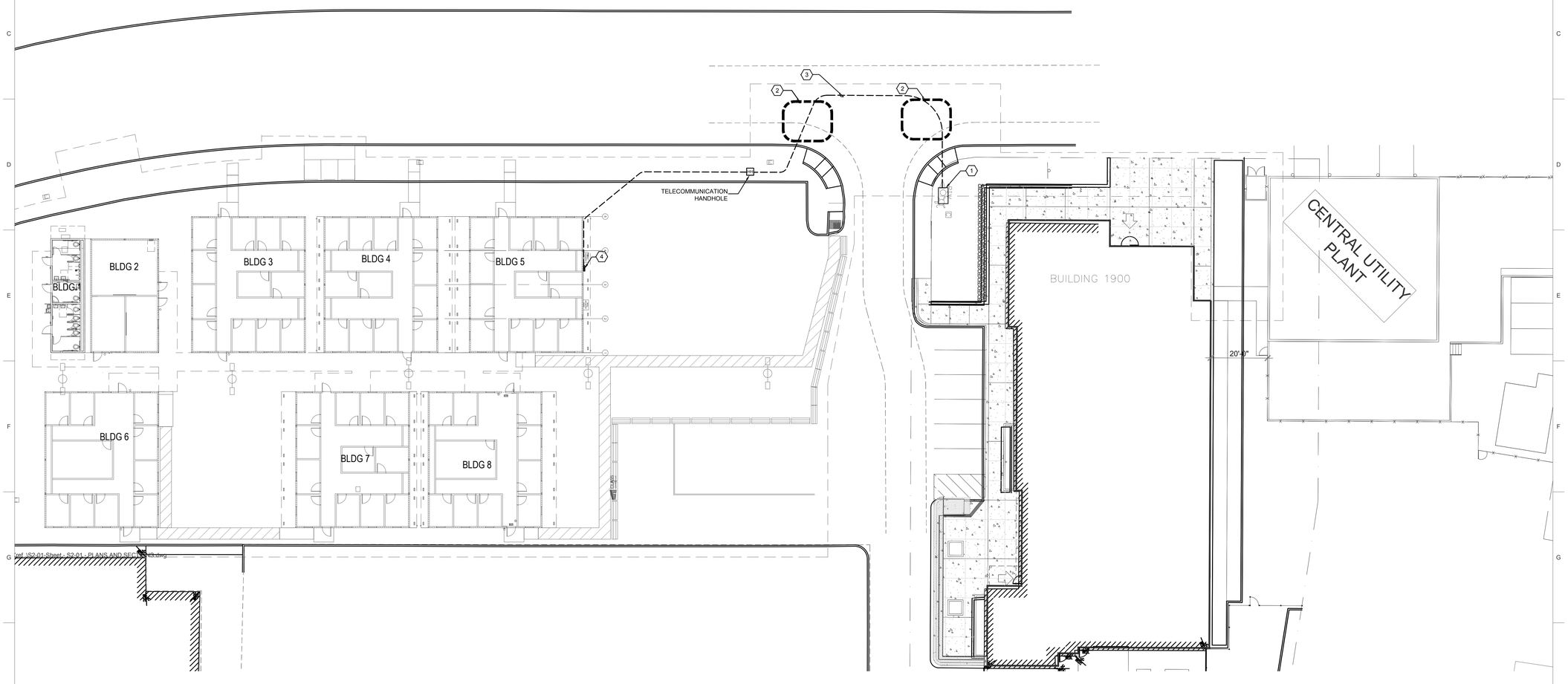

1 SITE PLAN - TECHNOLOGY

0 8' 16' 32'

SCALE: 1/16"=1'-0"

IDENTIFICATION STAMP
DIV. OF THE STATE ARCHITECT
APP: 01-119031 INC:
REVIEWED FOR
SS ☑ FLS ☑ ACS ☑
DATE: 10/22/2020

LPAS

2484 Natomas Park Drive Suite 100 Sacramento CA 95833
916 443 0335 lpasdesign.com Architecture + Design

LAS POSITAS
TEMPORARY FACULTY
VILLAGE MODULAR
OFFICES

LAS POSITAS COMMUNITY COLLEGE
LIVERMORE, CA

ARCHITECT'S STAMP APPROVAL

THIS DOCUMENT CONTAINS INFORMATION THAT IS PROPRIETARY TO LPAS, INC. AND IS FURNISHED FOR THE PURPOSES OF REVIEW, BIDDING OR CONSTRUCTION OF THE PROJECT LISTED IN THE JOB TITLE BOX ABOVE AND SHALL NOT BE USED FOR ANY OTHER PURPOSE OR RELEASED TO ANY OTHER PARTY WITHOUT THE WRITTEN CONSENT OF LPAS, INC. INFORMATION CONTAINED HEREIN IS AN INSTRUMENT OF PROFESSIONAL SERVICES AND SHALL REMAIN THE PROPERTY OF LPAS, INC. ALL RIGHTS RESERVED COPYRIGHT © 2009.

THIS DRAWING IS NOT FINAL OR TO BE USED FOR CONSTRUCTION UNTIL IT IS SIGNED BY THE ARCHITECT AND ENGINEER.

CONSULTANT

REGISTERED PROFESSIONAL ENGINEER
THOMAS B. JUN
No. E19320
ELECTRICAL
STATE OF CALIFORNIA

Date Signed: 9/24/20

INTERFACE ENGINEERING
PROJECT 2020-0001
CONTACT Geoff Morrison
155 Main Street, Suite 400
San Francisco, CA 94105
TEL 415.489.7240
www.interfaceengineering.com

SITE PLAN - TECHNOLOGY

PROJECT NO: 2020-0001
DATE: 2020-08-28

SHEET NO:

T1.10

GENERAL SHEET NOTES

A. COORDINATE THE EXACT LOCATION AND MOUNTING HEIGHTS OF TELECOMMUNICATION EQUIPMENTS WITH CLPCCD ITS, PRIOR TO INSTALLATION.

SHEET KEYNOTES

1. PROVIDE (1) 24" X 24" NEMA 3R ENCLOSURE AND COORDINATE WITH ARCHITECT AND MODULAR DESIGNER FOR EXACT LOCATION AND MOUNTING HEIGHT.
2. PROVIDE (1) CHATSWORTH M-SERIES MEGAFRAME, PART# M2050-711.
3. (3) - 2" CONDUIT UNDER WALKWAY.
4. (2) - 2" CONDUIT UNDER WALKWAY.
5. (2) - 4" CONDUIT FOR TELE/DATA.
6. (3) - 4" CONDUIT.
7. PROVIDE (1) 18" X 18" NEMA 3R ENCLOSURE AND COORDINATE WITH ARCHITECT AND MODULAR DESIGNER FOR EXACT LOCATION AND MOUNTING HEIGHT.
8. PROVIDE TYPE D DATA OUTLET ON CEILING FOR CEILING MOUNTED WIRELESS ACCESS POINT. TYPE D OUTLET WILL BE INSTALLED ON A DEDICATED J-HOOK 6"-12" ABOVE CEILING T-BAR WITH A 10FOOT SERVICE LOOP.
9. SEE DETAILS 4 AND 9 ON SHEET T3.20.
10. SEE DETAILS 5, 6 AND 9 ON SHEET T3.20.
11. SEE DETAILS 7 AND 9 ON SHEET T3.20.
12. SEE DETAIL 8 ON SHEET T3.20.

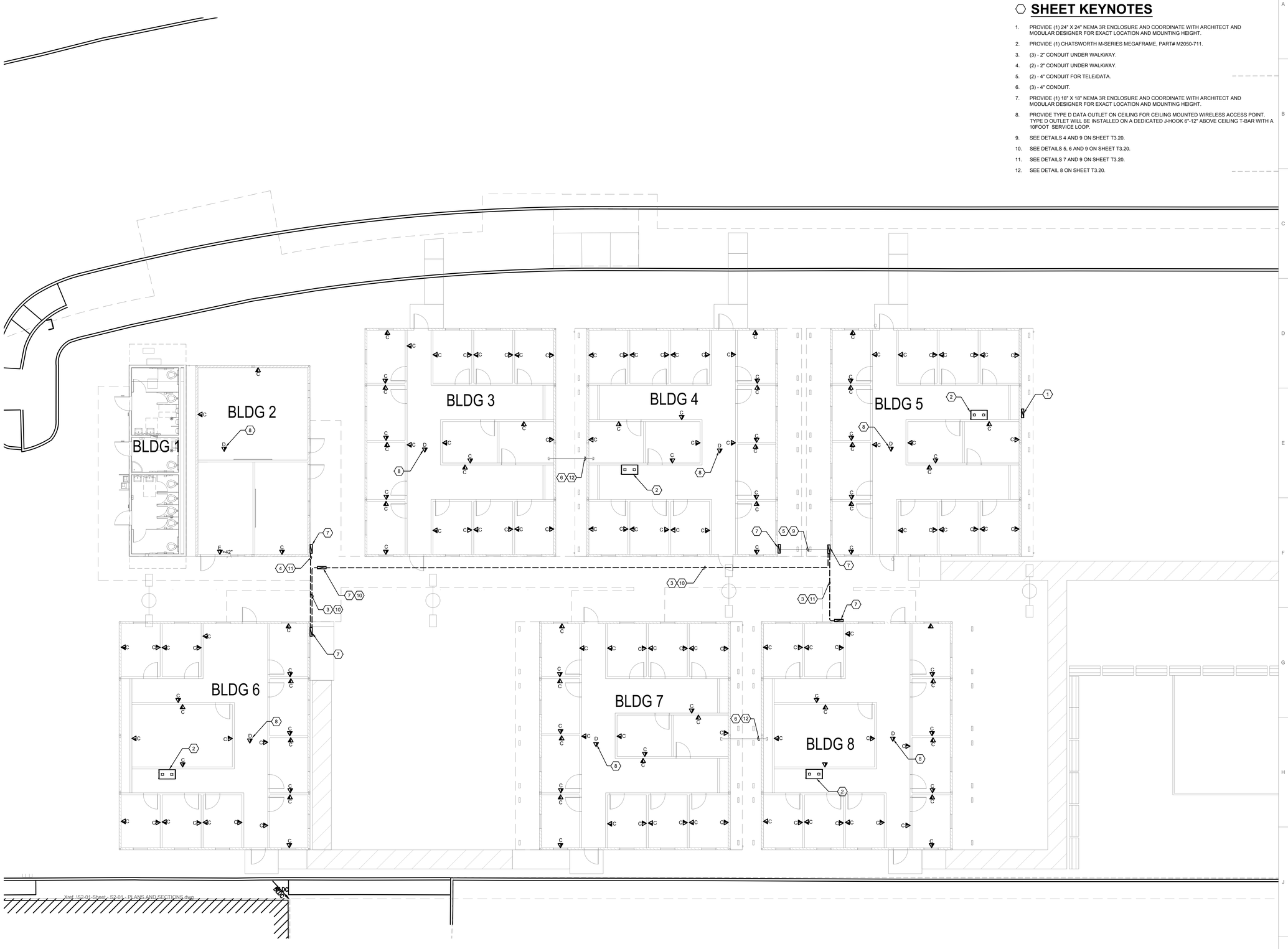

1 FLOOR PLAN - TECHNOLOGY

0 4' 8' 16'

SCALE: 1/8"=1'-0"

IDENTIFICATION STAMP
DIV. OF THE STATE ARCHITECT
APP: 01-119031 INC:
REVIEWED FOR
SS ☑ FLS ☑ ACS ☑
DATE: 10/22/2020

LPAS

2484 Natomas Park Drive Suite 100 Sacramento CA 95833
916 443 0335 lpasdesign.com Architecture + Design

LAS POSITAS
TEMPORARY FACULTY
VILLAGE MODULAR
OFFICES

LAS POSITAS COMMUNITY COLLEGE
LIVERMORE, CA

ARCHITECT'S STAMP APPROVAL

THIS DOCUMENT CONTAINS INFORMATION THAT IS PROPRIETARY TO LPAS, INC. AND IS FURNISHED FOR THE PURPOSES OF REVIEW, BIDDING OR CONSTRUCTION OF THE PROJECT LISTED IN THE JOB TITLE BOX ABOVE AND SHALL NOT BE USED FOR ANY OTHER PURPOSE OR RELEASED TO ANY OTHER PARTY WITHOUT THE WRITTEN CONSENT OF LPAS, INC. INFORMATION CONTAINED HEREIN IS AN INSTRUMENT OF PROFESSIONAL SERVICES AND SHALL REMAIN THE PROPERTY OF LPAS, INC. ALL RIGHTS RESERVED COPYRIGHT © 2009.

THIS DRAWING IS NOT FINAL OR TO BE USED FOR CONSTRUCTION UNTIL IT IS SIGNED BY THE ARCHITECT AND ENGINEER.

CONSULTANT

REGISTERED PROFESSIONAL ENGINEER
THOMAS B. JUN
No. E19320
ELECTRICAL
STATE OF CALIFORNIA
Date Signed: 9/14/20

INTERFACE ENGINEERING
PROJECT 2020-0001
CONTACT Geoff Morrison
135 Main Street, Suite 400
San Francisco, CA 94105.
TEL 415.489.7240
www.interfaceengineering.com

FLOOR PLAN - TECHNOLOGY

PROJECT NO: 2020-0001
DATE: 2020-08-28

SHEET NO:

T2.10

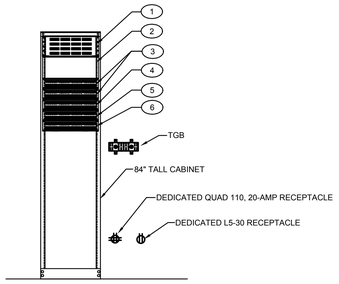

1 BDF CABINET ELEVATION

NO SCALE

BDF CABINET EQUIPMENT SCHEDULE		
EQUIPMENT #	DESCRIPTION	QUANTITY
1	COMMSCOPE HD-4U FIBER PANEL: - 24 PORT FOR INCOMING FIBER - 12 PORT TO BUILDING 4. - 12 PORT TO BUILDING 6. - 12 PORT TO BUILDING 8. FIBERS ARE TERMINATED ON SC CONNECTOR, 6 SC PER CONNECTOR PANEL	1
2	100 PAIR COPPER BLOCK TERMINATED ON FUSED PROTECTOR PANEL	1
3	2RU 48 PORT COMMSCOPE SYSTIMAX ANGLED CAT6A PANEL FROM FUSED PROTECTOR BLOCK	2
4	2RU 48 PORT COMMSCOPE SYSTIMAX ANGLED CAT6A PANEL FOR BACKBONETO BUILDING 4	1
5	2RU 48 PORT COMMSCOPE SYSTIMAX ANGLED CAT6A PANEL FOR BACKBONETO BUILDING 6	1
6	2RU 48 PORT COMMSCOPE SYSTIMAX ANGLED CAT6A PANEL FOR BACKBONETO BUILDING 8	1
7	2RU 48 PORT COMMSCOPE SYSTIMAX ANGLED CAT6A PANEL FOR VOICE/DATA	3

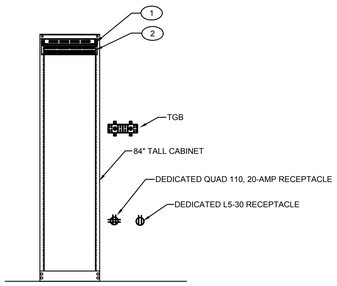

2 IDF CABINET ELEVATION

NO SCALE

IDF CABINET EQUIPMENT SCHEDULE		
EQUIPMENT #	DESCRIPTION	QUANTITY
1	1RU 24 PORT FIBER PANEL FOR BACKBONE FROM BDF	1
2	2RU 48 PORT COMMSCOPE SYSTIMAX ANGLED CAT6A PANEL FOR BACKBONE FROM BDF	1
3	2RU 48 PORT COMMSCOPE SYSTIMAX ANGLED CAT6A PANEL FOR BACKBONE FROM VOICE/DATA	5

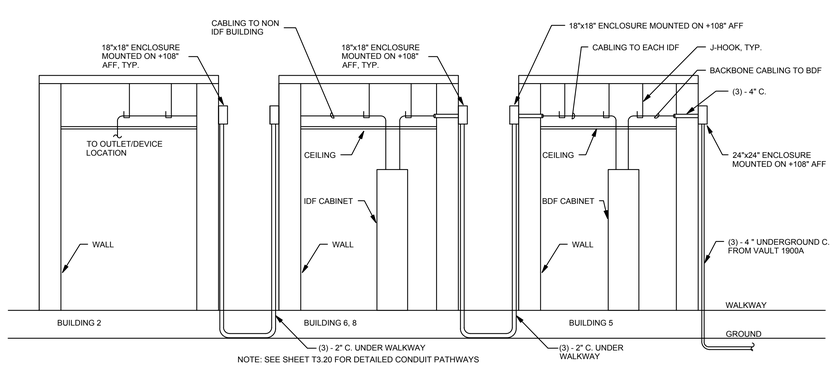

NOTE: SEE SHEET T3.20 FOR DETAILED CONDUIT PATHWAYS

3 CABLING PATHWAY DETAIL

NO SCALE

PATCH CORD CAT6A CABLE TABLE			
COLOR CODE	LENGTH (FOOT)	BUILDING #	QUANTITY
BLUE	5	4	25
		6	25
		8	25
WHITE	5	4	25
		6	25
		8	25
BLUE	10		100

NOTE: COORDINATE LENGTH WITH CLPCCD BEFORE ORDERING

4 PATCH CORD CAT6A CABLE TABLE

NO SCALE

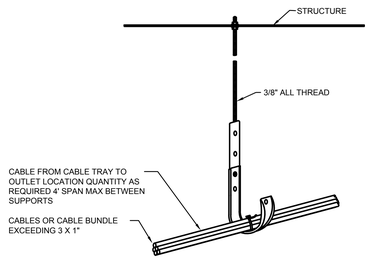

* USE THIS MOUNTING DETAIL IF MORE THAN (3) 1" CABLES OR CABLE BUNDLES ARE TO BE SUPPORTED.

5 J-HOOK DETAIL

NO SCALE

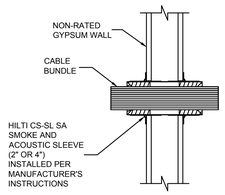

6 NON-RATED ACOUSTIC WALL PENETRATION DETAIL

NO SCALE

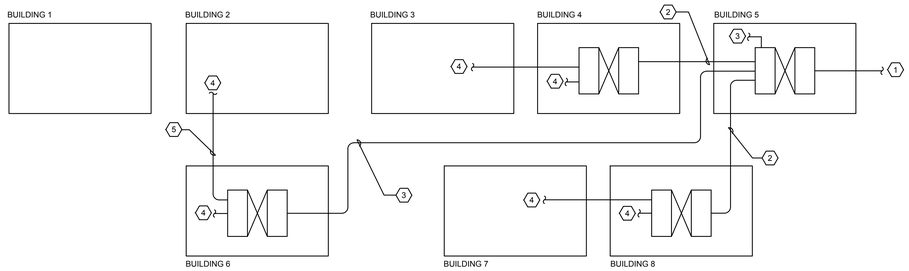

7 TELECOMMUNICATION BACKBONE DIAGRAM

NO SCALE

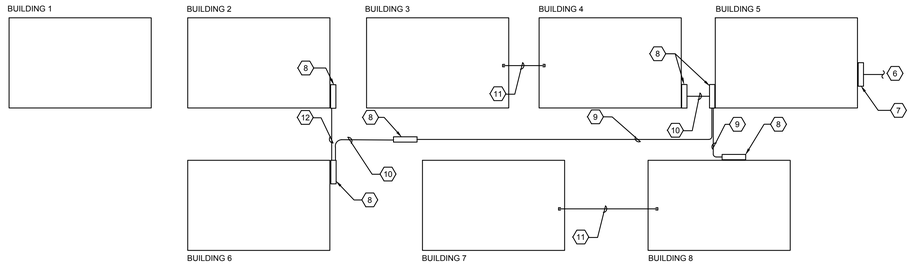

NOTE: SEE SHEET T3.30 FOR DETAILED CONDUIT PATHWAYS

8 TELECOMMUNICATION PATHWAY DIAGRAM

NO SCALE

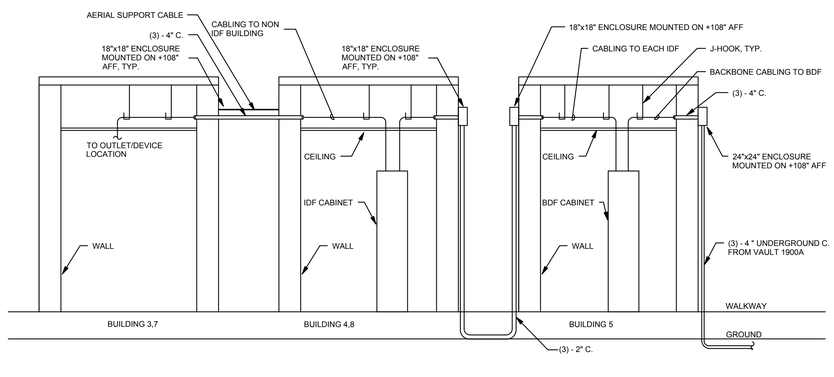

NOTE: SEE SHEET T3.20 FOR DETAILED CONDUIT PATHWAYS

9 CABLING PATHWAY BETWEEN BUILDING DETAIL

NO SCALE

SHEET KEYNOTES

1 (1) - 100 PAIR COPPER ANMW.
(1) - 24 STRAND COMMSCOPE TERASPEED SMF.
(1) - 12 STRAND COMMSCOPE LAZRSPEED OM4 MMF.
MMF WILL TERMINATE ON A SEPARATE SURFACE MOUNT ENCLOSURE BESIDE FA PANEL IN PORTABLE BUILDING #5.

2 (1) - 50 PAIR COPPER ANMW.
(1) - 12 STRAND COMMSCOPE TERASPEED SMF.

3 (1) - 25 PAIR COPPER ANMW.
(1) - 2 STRAND COMMSCOPE TERASPEED SMF.

4 SYSTIMAX CATEGORY 6A TO EACH OUTLET.

5 OSP RATED CAT6A TO BUILDING 2.

6 (3) - 4" UNDERGROUND CONDUIT FROM VAULT 1900F.

7 24" X 24" NEMA 3R ENCLOSURE.

8 18" X 18" NEMA 3R ENCLOSURE.

9 (3) - 2" CONDUIT.

10 (2) - 4" C. FOR TELE/DATA.

11 (3) - 4" C. FOR TELE/DATA.

12 (2) - 2" C. FOR TELE/DATA.

IDENTIFICATION STAMP
DIV. OF THE STATE ARCHITECT
APP: 01-119031 INC:
REVIEWED FOR
SS ☑ FLS ☑ ACS ☑
DATE: 10/22/2020

LPAS

2484 Natomas Park Drive Suite 100 Sacramento CA 95833
916 443 0335 lpasdesign.com Architecture + Design

LAS POSITAS
TEMPORARY FACULTY
VILLAGE MODULAR
OFFICES

LAS POSITAS COMMUNITY COLLEGE
LIVERMORE, CA

ARCHITECT'S STAMP APPROVAL

THIS DOCUMENT CONTAINS INFORMATION THAT IS PROPRIETARY TO LPAS, INC. AND IS FURNISHED FOR THE PURPOSES OF REVIEW, BIDDING OR CONSTRUCTION OF THE PROJECT LISTED IN THE JOB TITLE BOX ABOVE AND SHALL NOT BE USED FOR ANY OTHER PURPOSE OR RELEASED TO ANY OTHER PARTY WITHOUT THE WRITTEN CONSENT OF LPAS, INC. INFORMATION CONTAINED HEREIN IS AN INSTRUMENT OF PROFESSIONAL SERVICES AND SHALL REMAIN THE PROPERTY OF LPAS, INC. ALL RIGHTS RESERVED COPYRIGHT © 2009.

THIS DRAWING IS NOT FINAL OR TO BE USED FOR CONSTRUCTION UNTIL IT IS SIGNED BY THE ARCHITECT AND ENGINEER.

CONSULTANT

REGISTERED PROFESSIONAL ENGINEER
THOMAS B. JUNG
No. E19320
ELECTRICAL
STATE OF CALIFORNIA

Date Signed: 9/14/20

INTERFACE ENGINEERING
PROJECT 2020-0001
CONTACT Geoff Morrison
135 Main Street, Suite 400
San Francisco, CA 94105
TEL 415.489.7240
www.interfaceengineering.com

DETAILS AND RISER DIAGRAMS - TECHNOLOGY

PROJECT NO: 2020-0001

DATE: 2020-08-28

SHEET NO:

T3.10

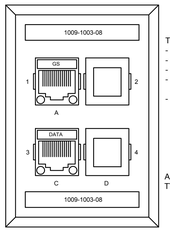

TYPE A DATA OUTLET
- DUAL JACK FACEPLATE.
- ONE VOICE JACK.
- ONE DATA JACK.
- FACEPLATE LABEL IN UPPER AND LOWER LABELING WINDOW.
- JACKS LABELED INDIVIDUALLY.

A

ACCEPTABLE SYMBOLS FOR TYPE A OUTLET

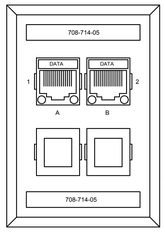

TYPE B DATA OUTLET
- QUAD JACK FACEPLATE.
- TWO DATA JACKS.
- FACEPLATE LABEL IN UPPER AND LOWER LABELING WINDOW.
- JACKS LABELED INDIVIDUALLY.

B

ACCEPTABLE SYMBOLS FOR TYPE B OUTLET

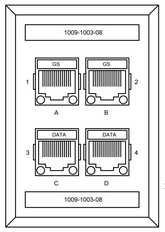

TYPE E DATA OUTLET
- QUAD JACK FACEPLATE.
- TWO VOICE JACKS.
- TWO DATA JACKS.
- FACEPLATE LABEL IN UPPER AND LOWER LABELING WINDOW.
- JACKS LABELED INDIVIDUALLY.

C

ACCEPTABLE SYMBOLS FOR TYPE C OUTLET

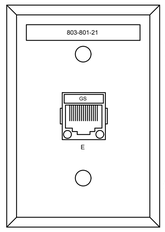

TYPE E DATA OUTLET
- SINGLE JACK METAL FACEPLATE.
- ONE VOICE JACK.

E

ACCEPTABLE SYMBOLS FOR TYPE E OUTLET

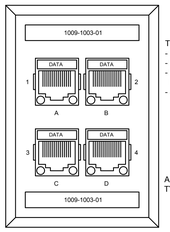

TYPE E DATA OUTLET
- QUAD JACK FACEPLATE.
- FOUR DATA JACKS.
- FACEPLATE LABEL IN UPPER AND LOWER LABELING WINDOW.
- JACKS LABELED INDIVIDUALLY.

D

ACCEPTABLE SYMBOLS FOR TYPE C OUTLET

1 TYPES OF OUTLETS DETAILS

NO SCALE

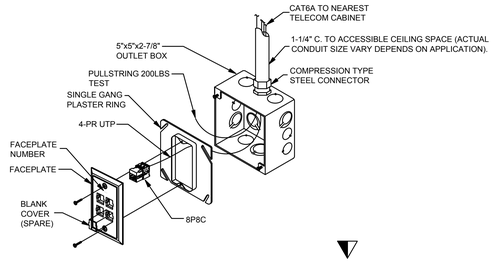

NOTE:

CONDUIT SIZE TO THE OUTLET BOX IS 1-1/4" C. UNLESS NOTIFIED OTHERWISE.
REFER TO FLOOR PLAN AND KEYNOTE FOR SPECIFIC CONDUIT SIZE.

2 TYPICAL DATA OUTLET DETAIL

NO SCALE

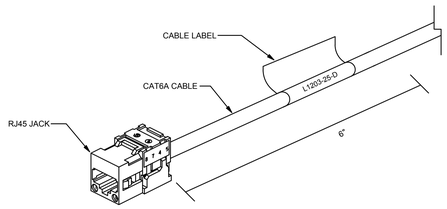

NOTE:

CABLE WILL BE LABELED ACCORDING TO THE GUIDELINES AS FOLLOWS
- NAME OF THE TELECOMMUNICATIONS SPACE WHERE THE CABLES TERMINATE.
- FACEPLATE/ OUTLET NUMBER.
- JACK LABEL - ALPHA (A, B, C, D) LABELED LEFT TO RIGHT, TOP TO BOTTOM.

CLPCCD ITS WILL REVIEW AND APPROVE ALL LABEL CONVENTIONS FOR THE CABLING SYSTEM.

3 STATION CABLE LABELING DETAIL

NO SCALE

RISER BACKBONE COPPER CABLE LABEL NOTES:

A. CABLES WILL BE LABELED AT EACH END OF THE CABLE BUNDLE AT THE FURTHEST POINT WHERE THE SHEATH IS INTACT (BEFORE BREAKOUT). IF THE RISER CABLES PASS THROUGH MULTIPLE PULLBOXES, TELECOMMUNICATION ROOMS AND RISER OPENINGS, THEY WILL BE LABELED AT EACH OPENING.

B. OUTSIDE PLANT BACKBONE FIBER CABLES WILL BE LABELED AT EACH END AND IN EACH HANDHOLE/MAINTENANCE HOLE THAT THEY PASS THROUGH. LABELS WILL BE HEAT AND WATER-PROOF SO THEY DO NOT DECAY WHEN EXPOSED TO THE ELEMENTS. ALL LABELS MUST BE VISIBLE AT POINT OF ACCESS.

C. ALL CABLES WILL BE LABELET ACCORDING TO THE GUIDELINES AT SET FORTH IN THE EIA.TIA 606-A STANDARD.
- THE ORIGINATION POINT.
- THE DESTINATION POINT.
- THE TYPE OF CABLE (CAT6, CAT6A).
- THE PAIR COUNT.

FIBER BACKBONE CABLE LABEL NOTES:

A. CABLES WILL BE LABELED AT EACH END OF THE CABLE BUNDLE AT THE FURTHEST POINT WHERE THE SHEATH IS INTACT (BEFORE BREAKOUT). IF THE RISER CABLES PASS THROUGH MULTIPLE PULLBOXES, TELECOMMUNICATION ROOMS AND RISER OPENINGS, THEY WILL BE LABELED AT EACH OPENING.

B. OUTSIDE PLANT BACKBONE FIBER CABLES WILL BE LABELED AT EACH END AND IN EACH HANDHOLE/MAINTENANCE HOLE THAT THEY PASS THROUGH. LABELS WILL BE HEAT AND WATER-PROOF SO THEY DO NOT DECAY WHEN EXPOSED TO THE ELEMENTS. ALL LABELS MUST BE VISIBLE AT POINT OF ACCESS.

C. ALL CABLES WILL BE LABELET ACCORDING TO THE GUIDELINES AT SET FORTH IN THE EIA.TIA 606-A STANDARD.
- THE ORIGINATION POINT.
- THE DESTINATION POINT.
- THE TYPE OF CABLE (SMF, 50MMF).
- THE FIBER STRAND COUNT.

D. DATA FIBER SHALL USED YELLOW LABELS.

E. FIRE ALARM FIBER SHALL USED RED LABELS.

F. VOICE COPPER SHALL USE WHITE LABELS.

CABLE LABELING NOTES:

A. STATION CABLES SHALL BE MARKED AT EACH END, ON THE SHEATH INDICATING THE TELECOMMUNICATIONS ROOM AND JACK NUMBER TO WHICH THE CABLE IS WIRED.

B. BACKBONE CABLES SHALL BE MARKED AT EACH ENDPOINT AND AT ALL INTERMEDIATE PULL/ACCESS POINTS OR JUNCTION BOXES. LABEL SHALL INDICATE ORIGINATION AND DESTINATION TELECOMMUNICATION ROOMS, SHEATH ID AND STRAND OR PAIR RANGE.

C. MEET THE LEGIBILITY, DEFACEMENT, EXPOSURE AND ADHEION REQUIREMENT OF UL 969.

D. BE PRE-PRINTED OR LASED PRINTED TYPE.

E. WHERE USE FOR CABLE MARKING, A LABEL WITH A VYNIL SUBSTRATE AND WHITE PRINTING AREA AND A CLEAR "TAIL" THAT SELF LAMINATES THE PRINTED AREA WHEN WRAPPED AROUND THE CABLE SHALL BE PROVIDED. THE LABEL COLOR SHALL BE DIFFERENT THAN THAT OF THE CABLE TO WHICH IT IS INDICATED.

F. THE CONTRACTOR SHALL CONFIRM SPECIFIC LABELING REQUIREMENTS WITH THE OWNER OR OWNER'S REPRESENTATIVE PRIOR TO CABLE INSTALLATION AND TERMINATION.

G. DATA FIBER WILL HAVE YELLOW LABELS.

H. COPPER WILL HAVE WHITE LABELS.

I. FIRE ALARM FIBER WILL HAVE RED LABELS.

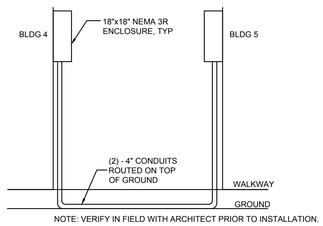

NOTE: VERIFY IN FIELD WITH ARCHITECT PRIOR TO INSTALLATION.

4 BUILDING 4 AND 5 CONDUIT ROUTING DETAIL

NO SCALE

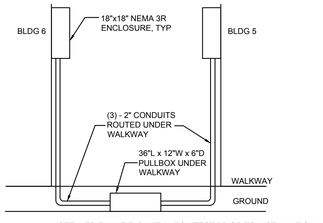

NOTE: VERIFY IN FIELD WITH ARCHITECT PRIOR TO INSTALLATION.

6 BUILDING 5 AND 6 CONDUIT ROUTING DETAIL

NO SCALE

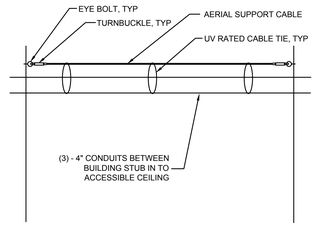

NOTE: VERIFY IN FIELD WITH ARCHITECT PRIOR TO INSTALLATION

8 CONDUIT SUPPORT ELEVATION DETAIL

NO SCALE

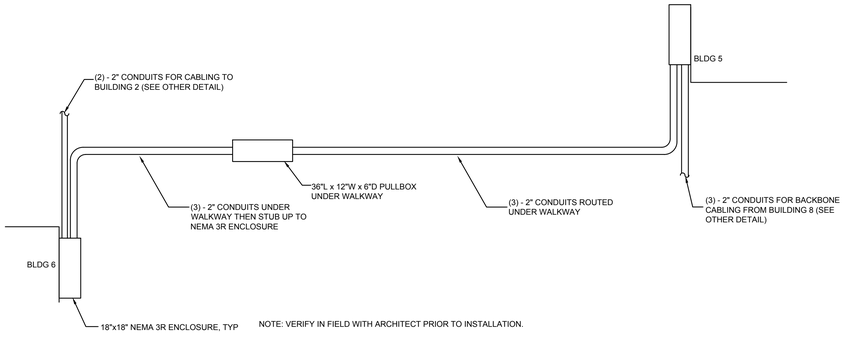

NOTE: VERIFY IN FIELD WITH ARCHITECT PRIOR TO INSTALLATION.

5 BUILDING 5 AND 6 CONDUIT ROUTING DETAIL

NO SCALE

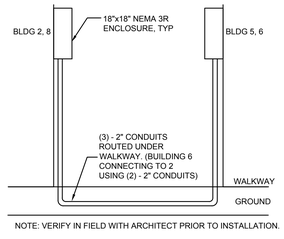

NOTE: VERIFY IN FIELD WITH ARCHITECT PRIOR TO INSTALLATION.

7 BUILDING 5 TO 8 AND BUILDING 6 TO 2 CONDUIT ROUTING DETAIL

NO SCALE

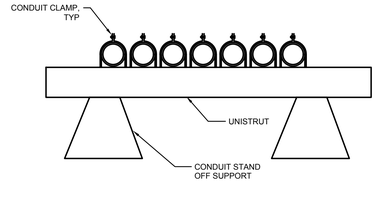

9 CONDUIT ON GROUND PATHWAY DETAIL

NO SCALE

IDENTIFICATION STAMP
DIV. OF THE STATE ARCHITECT
APP: 01-119031 INC:
REVIEWED FOR
SS ☑ FLS ☑ ACS ☑
DATE: 10/22/2020

LPAS

2484 Natomas Park Drive Suite 100 Sacramento CA 95833
916 443 0335 lpasdesign.com Architecture + Design

LAS POSITAS
TEMPORARY FACULTY
VILLAGE MODULAR
OFFICES

LAS POSITAS COMMUNITY COLLEGE
LIVERMORE, CA

ARCHITECT'S STAMP APPROVAL

THIS DOCUMENT CONTAINS INFORMATION THAT IS PROPRIETARY TO LPAS, INC. AND IS FURNISHED FOR THE PURPOSES OF REVIEW, BIDDING OR CONSTRUCTION OF THE PROJECT LISTED IN THE JOB TITLE BOX ABOVE AND SHALL NOT BE USED FOR ANY OTHER PURPOSE OR RELEASED TO ANY OTHER PARTY WITHOUT THE WRITTEN CONSENT OF LPAS, INC. INFORMATION CONTAINED HEREIN IS AN INSTRUMENT OF PROFESSIONAL SERVICES AND SHALL REMAIN THE PROPERTY OF LPAS, INC. ALL RIGHTS RESERVED COPYRIGHT © 2009.

THIS DRAWING IS NOT FINAL OR TO BE USED FOR CONSTRUCTION UNTIL IT IS SIGNED BY THE ARCHITECT AND ENGINEER.

CONSULTANT

REGISTERED PROFESSIONAL ENGINEER
THOMAS B. JUN
No. E19320
ELECTRICAL
STATE OF CALIFORNIA
Date Signed: 9/14/20

INTERFACE ENGINEERING
PROJECT 2020-0001
CONTACT Geoff Morrison
155 Main Street, Suite 400
San Francisco, CA 94105
TEL 415.489.7240
www.interfaceengineering.com

DETAILS - TECHNOLOGY

PROJECT NO: 2020-0001
DATE: 2020-08-28

SHEET NO:
T3.20

IDENTIFICATION STAMP
DIV. OF THE STATE ARCHITECT
APP: 01-119031 INC:
REVIEWED FOR
SS ☑ FLS ☑ ACS ☑
DATE: 10/22/2020

LPAS

2484 Natomas Park Drive Suite 100 Sacramento CA 95833
916 443 0335 lpasdesign.com Architecture + Design

LAS POSITAS TEMPORARY FACULTY VILLAGE MODULAR OFFICES

LAS POSITAS COMMUNITY COLLEGE
LIVERMORE, CA

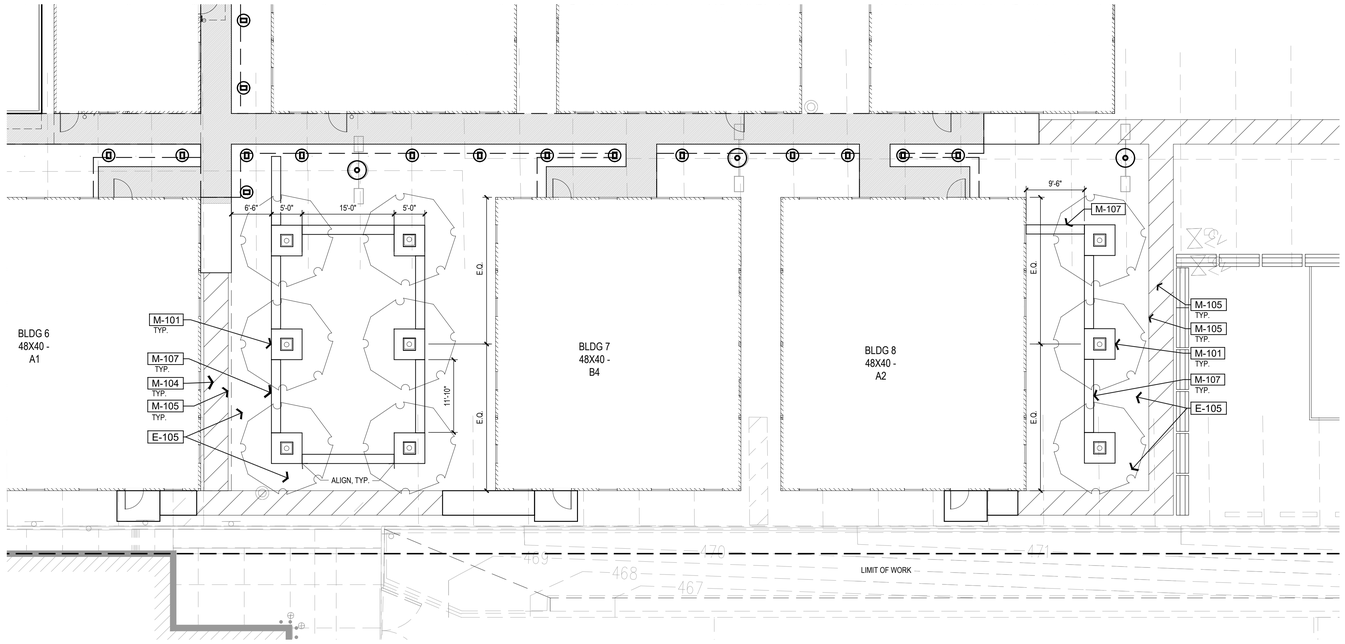

SCALE: 1" = 10'-0" (0 10 20 30 FT)

PROJECT NORTH

LANDSCAPE PLAN F1
1" = 10'-0"

REFERENCE NOTES SCHEDULE

SYMBOL	EXISTING IMPROVEMENTS DESCRIPTION	DETAIL
E-105	AC PAVING TO REMAIN	

SYMBOL	MISCELLANEOUS MATERIALS DESCRIPTION	DETAIL
M-101	SHADE TREES IN 24" BOX CONTAINERS	H4 / L1.00
M-104	4" WIDE STRIPING, COLOR WHITE	
M-105	4" WIDE STRIPING, COLOR BLUE	
M-107	WOOD BENCH	K4 / L1.00

REFERENCE NOTES SCHEDULE F10

NOTE:
ALL WOOD TO BE REDWOOD. UNLESS OTHERWISE NOTED.

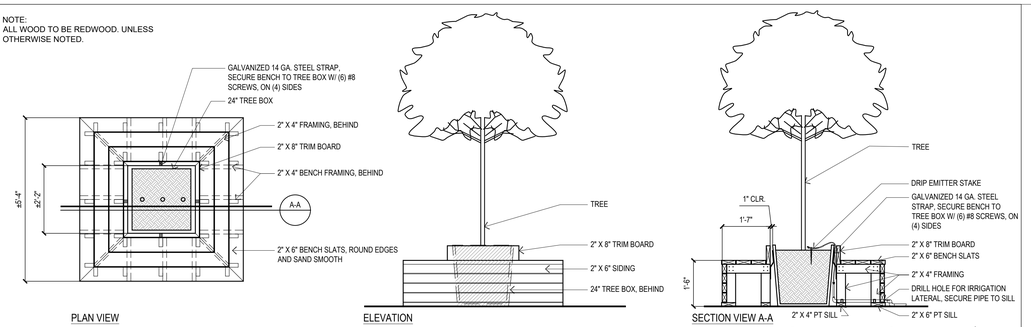

PLAN VIEW ELEVATION SECTION VIEW A-A

24" BOX TREE WITH SEAT WALL H4
1/2" = 1'-0"

PLANT SCHEDULE

TREES	BOTANICAL / COMMON NAME	CONT	WATER USE	QTY	DETAIL
	Zelkova serrata `Wireless` Wireless Zelkova	24"box	Med	9	H4

PLANT SCHEDULE H1

NOTE:
ALL WOOD TO BE REDWOOD

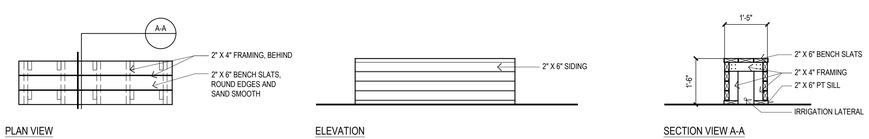

PLAN VIEW ELEVATION SECTION VIEW A-A

WOOD BENCH K4
1/2" = 1'-0"

1. NUMERICAL PLANT QUANTITIES ARE FOR INFORMATION ONLY. IN CASE OF DISCREPANCY, VERIFY FROM PLAN.
2. CONTRACTOR SHALL VERIFY LOCATION OF ALL EXISTING UNDERGROUND UTILITIES AND STRUCTURES PRIOR TO ANY EXCAVATION. CONTACT COMMON GROUND ALLIANCE (C.G.A.) @ 811. CALL AT LEAST 48 HOURS PRIOR TO PERFORMING EXCAVATION. CONTRACTOR SHALL REPAIR ANY DAMAGE TO UTILITIES CAUSED BY HIS WORK AT NO ADDITIONAL COST TO THE OWNER.
3. TOP DRESS ALL TREE PLANTERS WITH A 3" LAYER OF WALK-ON BARK MULCH PER SPECIFICATIONS. SUBMIT SAMPLE TO LANDSCAPE ARCHITECT FOR APPROVAL PRIOR TO INSTALLATION.
4. TREE LOCATIONS MAY BE ADJUSTED IN THE FIELD BY THE LANDSCAPE ARCHITECT TO SUIT SITE REQUIREMENTS.
5. ALL PLANT MATERIALS SHALL COMPLY WITH SPECIFICATIONS OF ANSI Z60.1 "STANDARD FOR NURSERY STOCK"
6. CONTRACTOR SHALL SECURE PLANT MATERIALS AS SPECIFIED IMMEDIATELY UPON BID AWARD. IF PLANT MATERIALS ARE NOT AVAILABLE, CONTACT LANDSCAPE ARCHITECT FOR APPROVAL OF SUBSTITUTIONS. NO SUBSTITUTIONS FOR PLANT MATERIAL WILL BE ALLOWED WITHOUT PRIOR WRITTEN APPROVAL OF THE LANDSCAPE ARCHITECT.
7. REFER TO PLANT DETAILS AND SPECIFICATIONS FOR MORE INFORMATION.

LANDSCAPE NOTES K1

LICENSED LANDSCAPE ARCHITECT
Lisa Q. Gielio
Signature
5/31/2021
Expiration Date
2020-09-01
Date
STATE OF CALIFORNIA

ARCHITECT'S STAMP APPROVAL

THIS DOCUMENT CONTAINS INFORMATION THAT IS PROPRIETARY TO LPAS, INC. AND IS FURNISHED FOR THE PURPOSES OF REVIEW, BIDDING OR CONSTRUCTION OF THE PROJECT LISTED IN THE JOB TITLE BOX ABOVE AND SHALL NOT BE USED FOR ANY OTHER PURPOSE OR RELEASED TO ANY OTHER PARTY WITHOUT THE WRITTEN CONSENT OF LPAS, INC. INFORMATION CONTAINED HEREIN IS AN INSTRUMENT OF PROFESSIONAL SERVICES AND SHALL REMAIN THE PROPERTY OF LPAS, INC. ALL RIGHTS RESERVED COPYRIGHT © 2009.

THIS DRAWING IS NOT FINAL OR TO BE USED FOR CONSTRUCTION UNTIL IT IS SIGNED BY THE ARCHITECT AND ENGINEER.

CONSULTANT

LANDSCAPE PLAN

PROJECT NO:
DATE: 2020-08-28

SHEET NO:
L1.00

FOR CONSTRUCTION

IDENTIFICATION STAMP
DIV. OF THE STATE ARCHITECT
APP: 01-119031 INC:
REVIEWED FOR
SS ☑ FLS ☑ ACS ☑
DATE: 10/22/2020

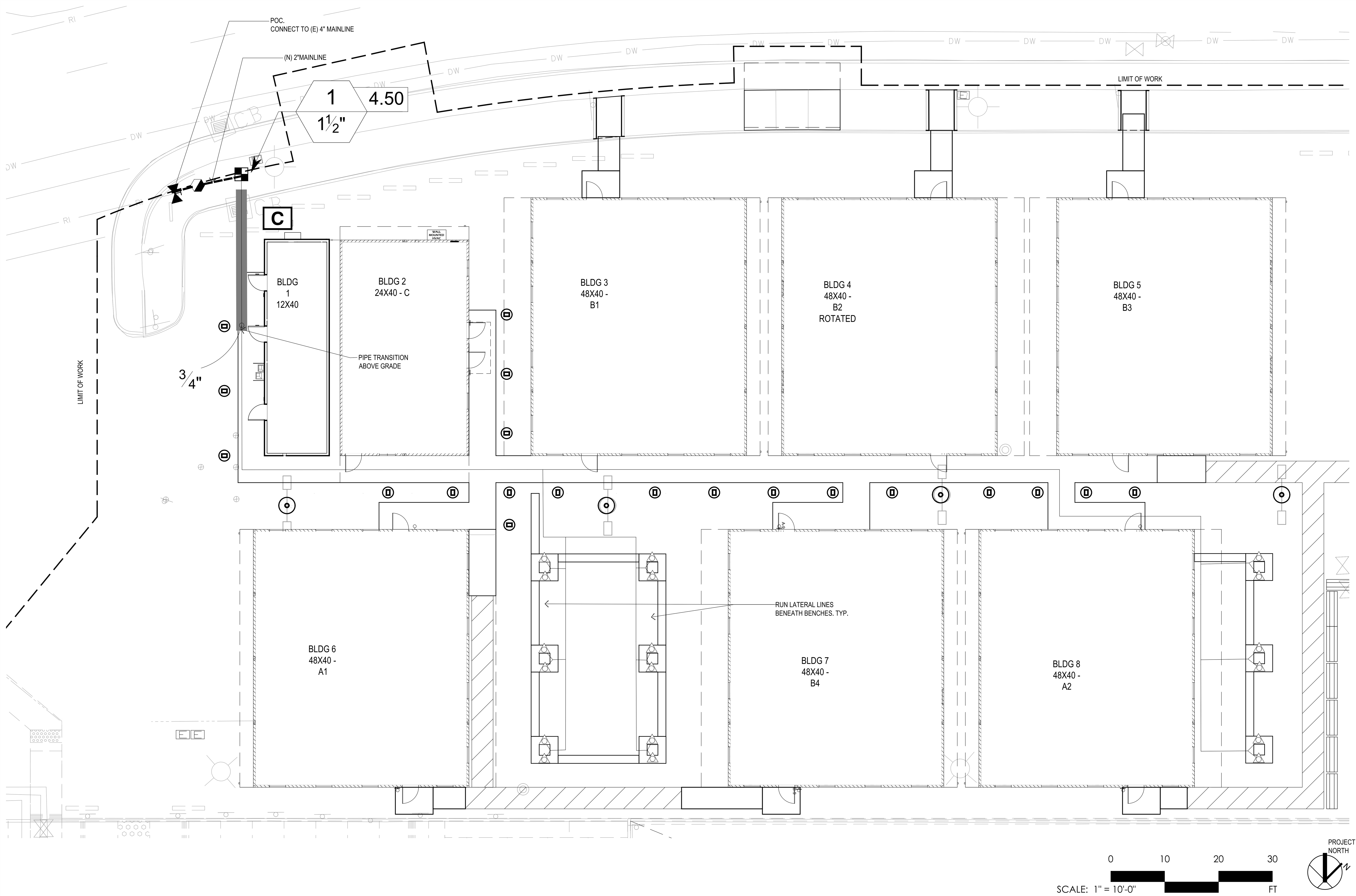

IRRIGATION PLAN F4
1" = 10'-0"

IRRIGATION SCHEDULE

SYMBOL	MANUFACTURER/MODEL/DESCRIPTION	DETAIL
▣	Hunter ICZ-101-40-LF-R Drip Control Zone Kit. 1" ICV Globe Valve with 1" HY100 filter system. Pressure Regulation: 40psi. Flow Range: .5 GPM to 15 GPM. 150 mesh stainless steel screen. Reclaimed purple filter cover.	K9, K11
5 7 10 12 18 24	Rain Bird XT025 w/ PC Module 1/2" FPT x Barb Grey Transfer Fitting 1/2" FPT x Barb Grey Transfer Fitting with 1 PC Module. Light brown= 5gph, violet= 7gph, green= 10gph, dark brown= 12gph, white= 18gph, orange= 24gph.	H11

SYMBOL	MANUFACTURER/MODEL/DESCRIPTION	DETAIL
	Hunter HQ-44LRC-R Quick coupler valve, purple rubber locking cover for reclaimed water use, red brass and stainless steel, with 1" NPT inlet, 2-piece body.	H9
	Matco-Norca 514T 1/2"-4" Brass Gate Valve, Full Port, with Solid Wedge. IPS. Wheel Handle. Same size as mainline pipe.	
C	Hunter XCH-0600-SS Electromechanical controller, 6 stations, outdoor model, battery-powered. Stainless Steel Cabinet. For residential/commercial use.	H5
	Irrigation Lateral Line: PVC Schedule 40-NP	H7, K7
	Irrigation Mainline: PVC Schedule 40	
	Pipe Sleeve: PVC Schedule 40 Typical pipe sleeve for irrigation pipe. Pipe sleeve size shall allow for irrigation piping and their related couplings to easily slide through sleeving material. Extend sleeves 18 inches beyond edges of paving or construction.	H7, K7

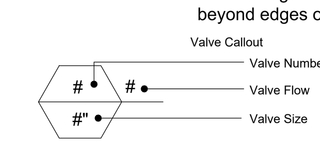

IRRIGATION SCHEDULE F1

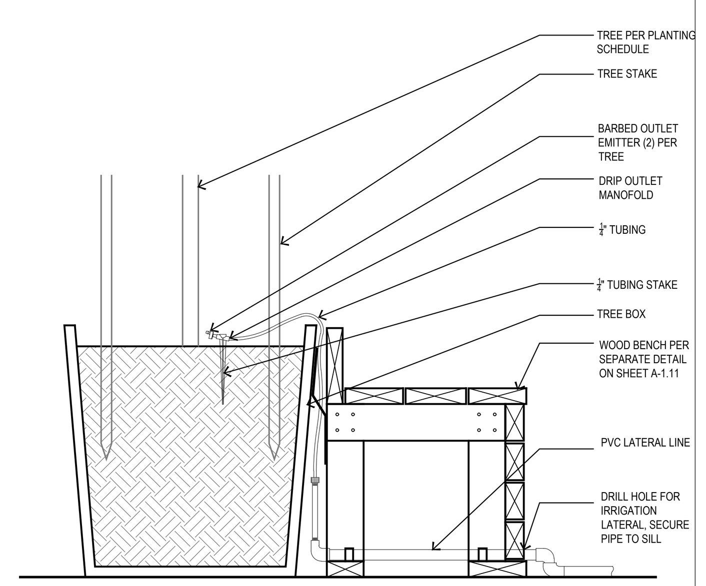

MULTI OUTLET DRIP EMITTER H11
N.T.S.

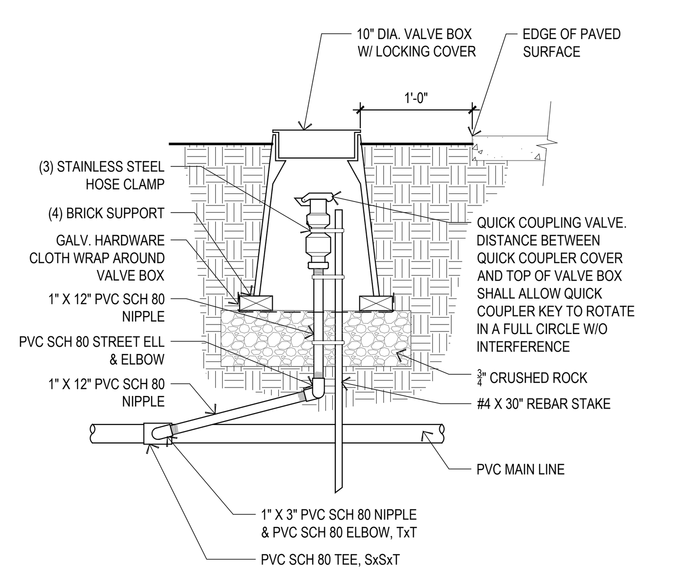

QUICK COUPLING VALVE H9
N.T.S.

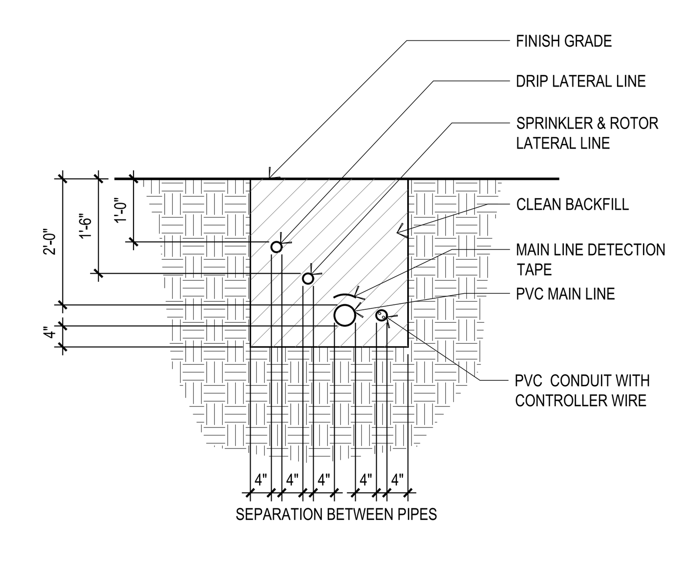

TRENCHING H7
N.T.S.

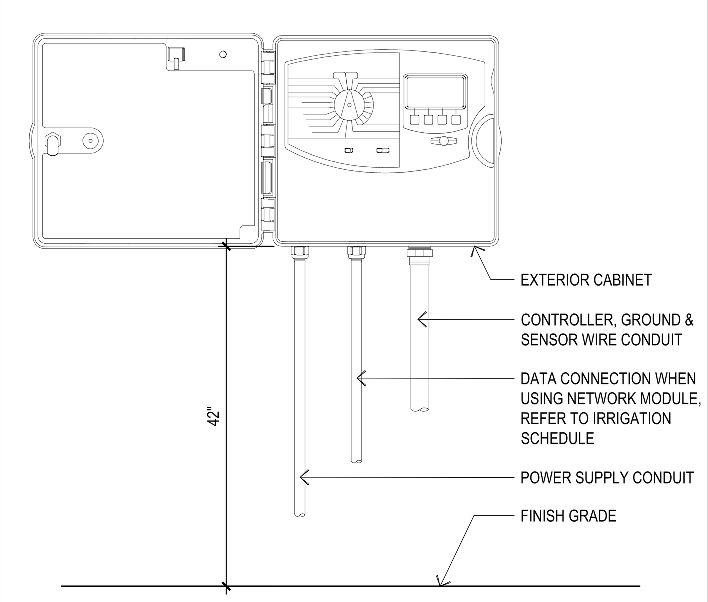

CONTROLLER EXTERIOR WALL MOUNT H5

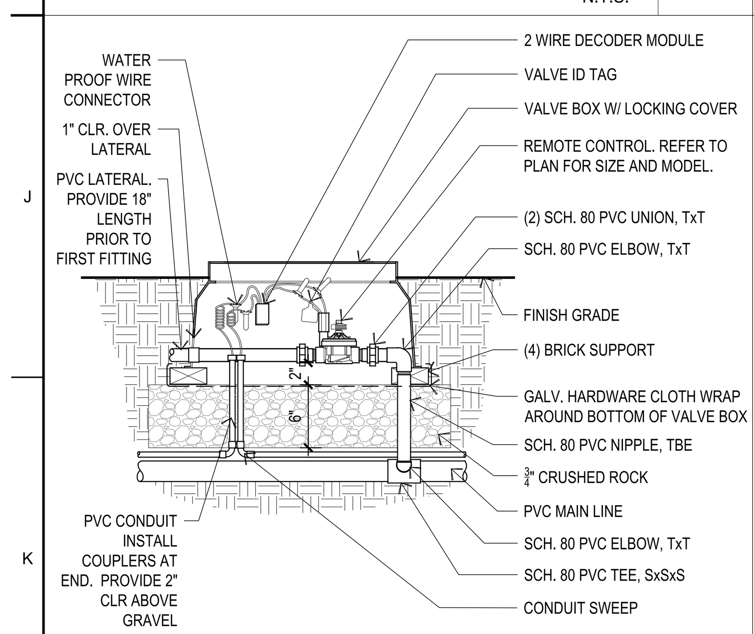

REMOTE CONTROL VALVE K11
N.T.S.

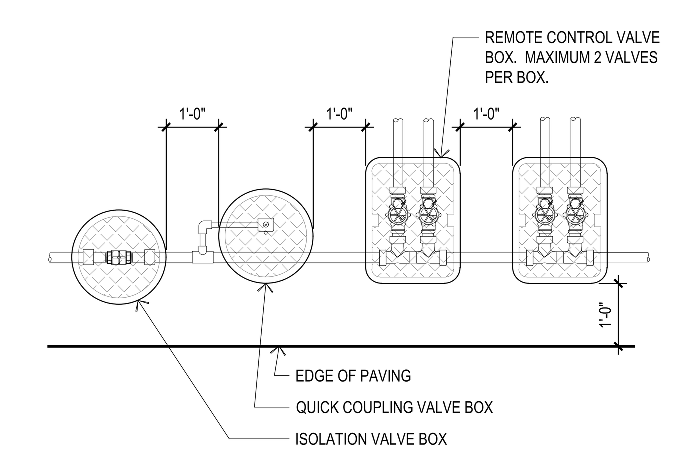

NOTES:

1. CENTER VALVE BOX OVER REMOTE CONTROL VALVE TO ALLOW SERVICING VALVE.
2. SET REMOTE CONTROL VALVE ASSEMBLY IN GROUND COVER/SHRUB AREA WHERE POSSIBLE. INSTALL IN LAWN ONLY IF GROUND COVER DOES NOT EXIST ADJACENT TO LAWN.
3. SET BOXES PARALLEL TO EACH OTHER AND PERPENDICULAR TO EDGE.

VALVE BOX LAYOUT K9
N.T.S.

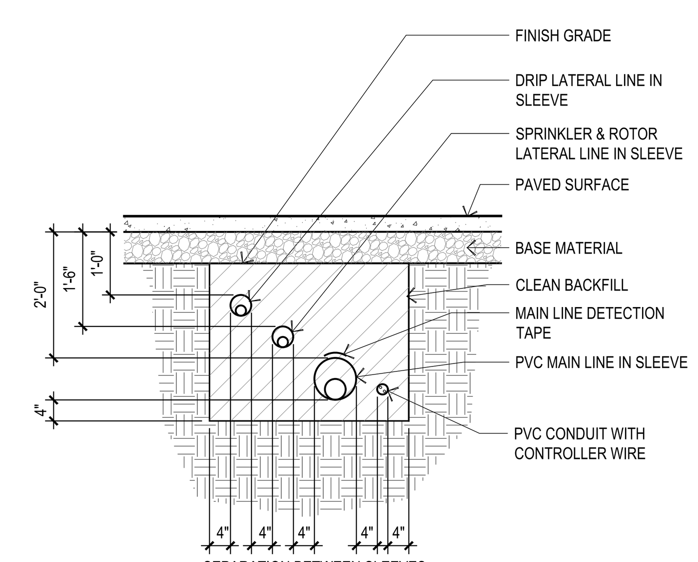

TRENCHING UNDER PAVING K7
N.T.S.

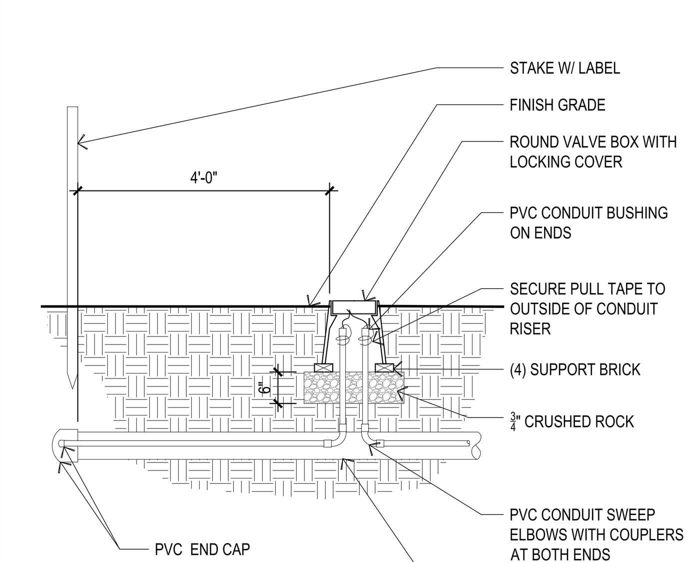

MAIN LINE & WIRE CONDUIT STUB OUT K5
N.T.S

IRRIGATION NOTES

GENERAL

1. ALL LOCAL MUNICIPAL AND STATE LAWS, RULES AND REGULATIONS GOVERNING OR RELATING TO ANY PORTION OF THIS WORK ARE HEREBY INCORPORATED INTO AND MADE A PART OF THESE SPECIFICATIONS AND THEIR PROVISIONS SHALL BE CARRIED OUT BY THE CONTRACTOR.
2. THE CONTRACTOR SHALL VERIFY THE LOCATIONS OF ALL EXISTING UTILITIES, STRUCTURES AND SERVICES BEFORE COMMENCING WORK. THE LOCATIONS OF UTILITIES, STRUCTURES AND SERVICES SHOWN IN THESE PLANS ARE APPROXIMATE ONLY. ANY DISCREPANCIES BETWEEN THESE PLANS AND ACTUAL FIELD CONDITIONS SHALL BE REPORTED TO THE OWNER'S REPRESENTATIVE.
3. THE CONTRACTOR SHALL OBTAIN THE PERTINENT ENGINEERING OR ARCHITECTURAL PLANS BEFORE BEGINNING WORK.
4. THE CONTRACTOR SHALL OBTAIN ALL NECESSARY PERMITS REQUIRED TO PERFORM THE WORK INDICATED HEREIN BEFORE BEGINNING WORK.
5. THIS DESIGN IS DIAGRAMMATIC. ALL IRRIGATION EQUIPMENT SHOWN IN PAVED AREAS IS FOR DESIGN CLARITY ONLY AND IS TO BE INSTALLED WITHIN PLANTING AREAS.
6. THE CONTRACTOR SHALL NOT WILLFULLY INSTALL ANY EQUIPMENT AS SHOWN ON THE PLANS WHEN IT IS OBVIOUS IN THE FIELD THAT UNKNOWN CONDITIONS EXIST THAT WERE NOT EVIDENT AT THE TIME THESE PLANS WERE PREPARED. ANY SUCH CONDITIONS SHALL BE BROUGHT TO THE ATTENTION OF THE OWNER'S REPRESENTATIVE PRIOR TO ANY WORK OR THE IRRIGATION CONTRACTOR SHALL ASSUME ALL RESPONSIBILITY FOR ANY FIELD CHANGES DEEMED NECESSARY BY THE OWNER.
7. INSTALL ALL EQUIPMENT AS SHOWN IN THE DETAILS AND PER SPECIFICATIONS.
8. ALL CONTROLLER WIRE SHALL BE INSTALLED IN SCH. 40 CONDUIT, MINIMUM SIZE SHALL BE 11/2".
9. THE CONTRACTOR SHALL PROVIDE ADEQUATE IRRIGATION TO ALL PLANTERS. IRRIGATION COVERAGE OF PLANTER MAY REQUIRE ADDITIONAL IRRIGATION EQUIPMENT TO PROVIDE REQUIRED COVERAGE TO SUSTAIN HEALTH PLANT GROWTH.

PIPE

1. MAINLINE SHOWN WITHIN PAVING FOR CLARITY ONLY. ACTUAL MAINLINE LOCATION TO BE A MINIMUM OF 18" OFF ADJACENT HARDSCAPE, FENCE, PROPERTY LINES AND OTHER OBSTACLES TYP.
2. LATERAL LINES ARE SHOWN WITHIN PAVING FOR CLARITY ONLY, ACTUAL LOCATION TO BE WITHIN PLANTER. CONFIRM LAYOUT IN FIELD WITH OWNER'S AUTHORIZED REPRESENTATIVE PRIOR TO COMMENCING WORK.
3. ALL MAINLINE PIPE UNDER PAVED AREAS TO BE INSTALLED IN SLEEVE TWICE THE DIAMETER OF THE PIPE CARRIED; LATERAL LINE SHALL BE INSTALLED IN SLEEVE TWICE THE DIAMETER OF THE PIPE CARRIED. SLEEVES TO EXTEND AT LEAST 18" PAST THE EDGE OF THE PAVING. SLEEVE ENDS SHALL BE FILLED WITH EXPANDING FOAM TO KEEP OUT DIRT AFTER PIPE IS INSTALLED.
4. ALL PIPE SIZES SHALL CONFORM TO THOSE SHOWN ON THE DRAWINGS. LATERAL PIPE NOT SIZED ON DRAWING AND THAT ARE DOWNSTREAM OF 1" PIPE SHALL BE MINIMUM OF 3/4" PIPE SIZE. THE ONLY ALLOWED PIPE SIZE SUBSTITUTIONS WILL BE FOR LARGER SIZED PIPE.
5. CONTRACTOR TO FLUSH MAINLINE AND LATERAL IRRIGATION CLEAR OF ALL DEBRIS BEFORE LINES ARE PRESSURIZED.

VALVES

1. ALL QUICK COUPLER AND REMOTE CONTROL VALVES TO BE INSTALLED IN SHRUB OR GROUND COVER AREAS WHERE POSSIBLE.
2. ALL QUICK COUPLER AND REMOTE CONTROL VALVES TO BE INSTALLED AS SHOWN ON THE INSTALLATION DETAILS. INSTALL ALL QUICK COUPLER AND REMOTE CONTROL VALVES WITHIN 18" OF HARDSCAPE.
3. REMOTE CONTROL VALVES AND ISOLATION VALVE LOCATIONS ON THIS DRAWING ARE APPROXIMATE. THE LANDSCAPE CONTRACTOR SHALL STAKE OUT EACH REMOTE CONTROL VALVE AND ISOLATION VALVE LOCATION FOR REVIEW AND APPROVAL BY OWNER REPRESENTATIVE PRIOR TO INSTALLATION OF ALL VALVES. MINOR MODIFICATIONS OF REMOTE CONTROL VALVES AND ISOLATION VALVE LOCATIONS AS REQUESTED BY THE OWNER REPRESENTATIVE SHALL BE PROVIDED BY THE CONTRACTOR AT NO ADDITIONAL COST TO THE OWNER.

CONTROLLER

1. CONTRACTOR TO INSTALL CONTROLLER IN STEEL PEDESTAL ENCLOSURE PER MANUFACTURERS RECOMMENDATIONS.
2. CONTRACTOR TO COORDINATE 110 V ELECTRICAL SUPPLY POWER FOR CONTROLLER.
3. CONTROLLER TO BE GROUNDED PER MANUFACTURER AND INDUSTRY STANDARDS.

IRRIGATION NOTES K1

LPAS
2484 Natomas Park Drive Suite 100 Sacramento CA 95833
916 443 0335 lpasdesign.com Architecture + Design

LAS POSITAS TEMPORARY FACULTY VILLAGE MODULAR OFFICES

LAS POSITAS COMMUNITY COLLEGE
LIVERMORE, CA

STATE OF CALIFORNIA
Signature
5/31/2021
Renewal Date
2020-09-01
Date

ARCHITECT'S STAMP APPROVAL

THIS DOCUMENT CONTAINS INFORMATION THAT IS PROPRIETARY TO LPAS, INC. AND IS FURNISHED FOR THE PURPOSES OF REVIEW, BIDDING OR CONSTRUCTION OF THE PROJECT LISTED IN THE JOB TITLE BOX ABOVE AND SHALL NOT BE USED FOR ANY OTHER PURPOSE OR RELEASED TO ANY OTHER PARTY WITHOUT THE WRITTEN CONSENT OF LPAS, INC. INFORMATION CONTAINED HEREIN IS AN INSTRUMENT OF PROFESSIONAL SERVICES AND SHALL REMAIN THE PROPERTY OF LPAS, INC. ALL RIGHTS RESERVED COPYRIGHT © 2009.

THIS DRAWING IS NOT FINAL OR TO BE USED FOR CONSTRUCTION UNTIL IT IS SIGNED BY THE ARCHITECT AND ENGINEER.

CONSULTANT

IRRIGATION PLAN

PROJECT NO:
DATE: 2020-08-28

SHEET NO:
L2.00

FOR CONSTRUCTION

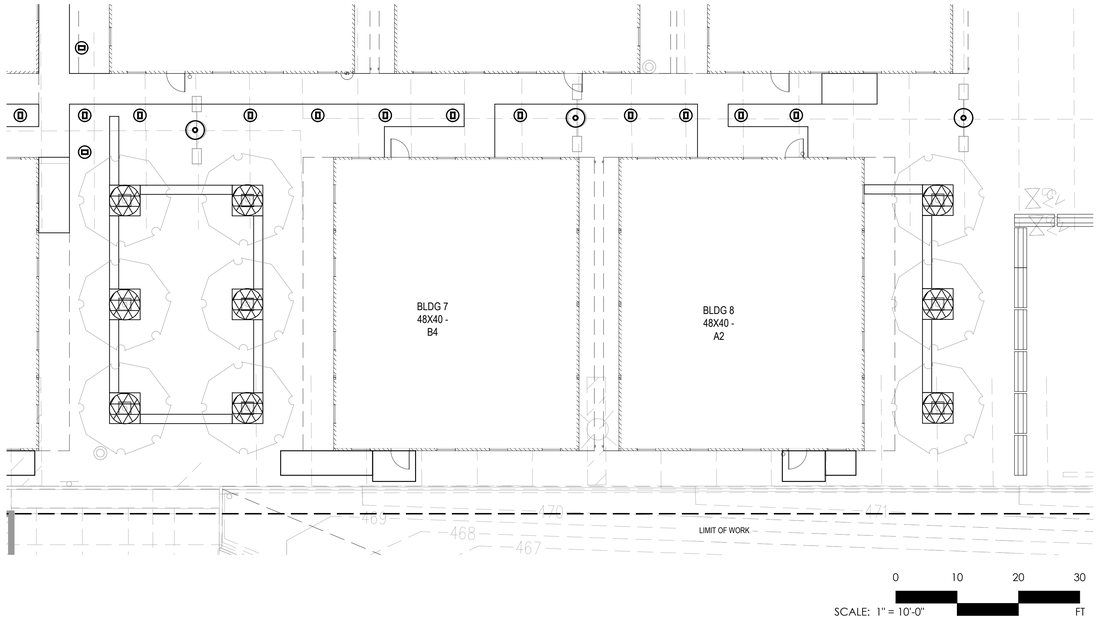

HYDROZONE PLAN
1" = 10'-0"
F1

SYMBOL	HYDROZONE	WATER USE (PLANT FACTOR)	IRRIGATION
	HYDROZONE 3 TREES	MEDIUM (0.5)	BUBBLER

HYDROZONES
H4

CALIFORNIA WATER EFFICIENT LANDSCAPE CALCULATIONS

Reference Evapotranspiration (ET_0)		8.4	Project Type	Non-Residential		0.45
Hydrozone # / Planting Description[a]	Plant Factor (PF)	Irrigation Method[b]	Irrigation Efficiency (IE)[c]	ETAF (PF/IE)	Landscape Area (Sq. Ft.)	ETAF x Area	Estimated Total Water Use (ETWU)[e]
REGULAR LANDSCAPE AREAS							
Hydrozone 3: Trees - Medium	0.5	Drip	0.81	0.62	54.0	33	174
				Totals	54	33	174
				Totals	0	0	0
						ETWU Total	174
						Maximum Allowed Water Allowance (MAWA)[d]	127
							29%

ETAF Calculations

Regular Landscape Areas

Total ETAF x Area	33
Total Area	54
Average ETAF	0.62

All Landscape Areas

Total ETAF x Area	33
Total Area	54
Average ETAF	0.62

Average ETAF for Regular Landscape Areas must be 0.55 or below for residential areas, and 0.45 or below for non-residential areas.

WATER USE CALCULATION
K4

IRRIGATION SCHEDULE

Hydrozone #	Month of July/ Landscape ET	Landscape ET per Week	Irrigation Precipitation Rate in In/Hr	Minutes per Week Controller Water Time	Cycle	Water Days per Week	Minutes of Run Time per Cycle	Eto	Plant Factor	Irrigation Efficency/ DU	Schedule Multiplier
1	3.7	0.925	3.85	15	1	3	5	7.4	0.5	0.81	1.13

IRRIGATION RUN-TIME SCHEDULE
K7

IDENTIFICATION STAMP
DIV. OF THE STATE ARCHITECT
APP: 01-119031 INC:
REVIEWED FOR
SS ☑ FLS ☑ ACS ☑
DATE: 10/22/2020

LPAS

2484 Natomas Park Drive Suite 100 Sacramento CA 95833
916 443 0335 lpasdesign.com Architecture + Design

LAS POSITAS
TEMPORARY FACULTY
VILLAGE MODULAR
OFFICES

LAS POSITAS COMMUNITY COLLEGE
LIVERMORE, CA

LICENSED LANDSCAPE ARCHITECT
JOSE CASTILLO
No. 5011
Signature
Expiration Date
2020-09-01
STATE OF CALIFORNIA

ARCHITECT'S STAMP APPROVAL

THIS DOCUMENT CONTAINS INFORMATION THAT IS PROPRIETARY TO LPAS, INC. AND IS FURNISHED FOR THE PURPOSES OF REVIEW, BIDDING OR CONSTRUCTION OF THE PROJECT LISTED IN THE JOB TITLE BOX ABOVE AND SHALL NOT BE USED FOR ANY OTHER PURPOSE OR RELEASED TO ANY OTHER PARTY WITHOUT THE WRITTEN CONSENT OF LPAS, INC. INFORMATION CONTAINED HEREIN IS AN INSTRUMENT OF PROFESSIONAL SERVICES AND SHALL REMAIN THE PROPERTY OF LPAS, INC. ALL RIGHTS RESERVED COPYRIGHT © 2009.

THIS DRAWING IS NOT FINAL OR TO BE USED FOR CONSTRUCTION UNTIL IT IS SIGNED BY THE ARCHITECT AND ENGINEER.

CONSULTANT

HYDROZONE PLAN

PROJECT NO:
DATE: 2020-08-28

SHEET NO:
L2.20

FOR CONSTRUCTION

IDENTIFICATION STAMP
DIV. OF THE STATE ARCHITECT
APP: 01-119031 INC:
REVIEWED FOR
SS ☑ FLS ☑ ACS ☑
DATE: 10/22/2020

LAS POSITAS TEMPORARY FACULTY VILLAGE MODULAR OFFICES

Las Positas Community College
Livermore, CA

FOR CONSTRUCTION

08.28.2020

VOLUME 2

LPAS

2484 Natomas Park Drive Suite 100 Sacramento CA 95833
916 443 0335 lpasdesign.com Architecture + Design

Project # 863-0005

A0.00

Sheet List

Sheet Number	Sheet Name
Cover	
A0.0	COVER SHEET
A0.0.1	PROJECT OPTIONS SCHEDULE
A0.1	TYPICAL KEY PLAN AND SCHEDULES, GEN NOTES
A0.2	SIGNAGE AND SYMBOLS
~~A0.3~~	~~DSA-103 T&I CONCRETE FLOORS~~
A0.4	DSA-103 T&I PLYWOOD FLOORS
A0.5	CALGREEN SPEC'S
Architectural	
~~A1.0~~	~~12x40 OPTION 1 A/B/C FLOOR PLAN~~
A1.1	12x40 OPTION 2 A/B FLOOR PLAN
~~A1.2~~	~~12x40 OPTION 3 A/B FLOOR PLAN~~
~~A1.3~~	~~12x40 WORK ROOM FLOOR PLAN~~
A2.1	ARCHITECTURAL DETAILS (WOOD FRAMING SHTG FINISH)
~~A2.2~~	~~ARCHITECTURAL DETAILS (WOOD FRAMING PLASTER FINISH)~~
~~A2.3~~	~~ARCHITECTURAL DETAILS (MTL FRAMING SHTG FINISH)~~
~~A2.4~~	~~ARCHITECTURAL DETAILS (MTL FRAMING PLASTER FINISH)~~
~~A2.5~~	~~ARCHITECTURAL DETAILS (1-HR WOOD FRAMING SHTG FINISH)~~
~~A2.6~~	~~ARCHITECTURAL DETAILS (1-HR WOOD FRAMING PLASTER FINISH)~~
~~A2.7~~	~~ARCHITECTURAL DETAILS (1-HR MTL FRAMING SHTG FINISH)~~
~~A2.8~~	~~ARCHITECTURAL DETAILS (1-HR MTL FRAMING PLASTER FINISH)~~
A2.9	ARCHITECTURAL DETAILS (FLOOR)
~~A3.0~~	~~ADDITIONAL FIRE RATING DETAILS AND NOTES~~
A3.1	ACCESSIBILITY AND MOUNTING HEIGHT DETAILS
~~A3.2~~	~~RCP OPTION 1 (A) (B) (C)~~
A3.2.1	RCP OPTION 2 (A) (B)
~~A3.2.2~~	~~RCP OPTION 3 (A) (B)~~
~~A3.2.3~~	~~RCP WORK ROOM~~
A3.2.4	CEILING NOTES
A3.3	CEILING DETAILS (T-GRID)
~~A3.4~~	~~CEILING DETAILS (GYP BOARD)~~
A4.0	ROOF PLAN MONO AND DUAL SLOPE
A4.1	ROOF DETAILS (STANDING SEAM)
~~A4.2~~	~~ROOF DETAILS (EPDM)~~
~~A4.3~~	~~ARCHITECTURAL DETAILS (PARAPET)~~
A5.0	EXTERIOR ELEVATIONS
A5.1	INTERIOR ELEVATIONS
A6.0	ARCHITECTURAL SECTIONS
Architectural	
~~A3.0.1~~	~~FIRE SEPARATION & PENETRATION DETAILS~~
~~A7.0~~	~~ADDITIONAL OPTION DETAILS~~
A7.1	ADDITIONAL OPTION DETAILS
A7.2	ADDITIONAL OPTION DETAILS
MEP	
E0.1	ELECTRICAL GENERAL NOTES
~~E1.0~~	~~12x40 ELECTRICAL PLAN OPTION 1 (A) (B) (C)~~
E1.2	12x40 ELECTRICAL PLAN OPTION 2 (A) (B)
E1.3	12x40 ELECTRICAL PLAN OPTION 3 (A) (B)
E1.4	12x40 ~~ELECTRICAL PLAN WORK ROOM AND~~ ELECTRICAL PANEL SCHEDULE
E2.0	T24 - NRCC-LTI-01/02 INDOOR LIGHTING
E2.1	T24 - NRCC-LTO-01/02 OUTDOOR LIGHTING
E2.2	T24 - NRCC-ELC-01 ELECTRICAL POWER DISTRIBUTION
M0.1	MISCELLANEOUS NOTES & DETAILS
~~M1.0~~	~~MECHANICAL ROOF MOUNT 12x40~~
M2.0	T24 - NRCC-PRF-01-E PERFORMANCE CERTIFICATE
M2.1	T24 - NRCC-PRF-01-E PERFORMANCE CERTIFICATE
M2.2	T24 - NRCC-PRF-01-E PERFORMANCE CERTIFICATE
~~P1.0~~	~~12x40 SUPPLY & ISO OPTION 1 (A) (B) (C)~~
P1.2	12x40 SUPPLY & ISO OPTION 2 (A) (B)
~~P1.3~~	~~12x40 SUPPLY & ISO OPTION 3 (A) (B)~~
~~P2.1~~	~~12x40 WASTE & ISO OPTION 1 (A) (B) (C)~~
P2.2	12x40 WASTE & ISO OPTION 2 (A) (B)
~~P2.3~~	~~12x40 WASTE & ISO OPTION 3 (A) (B)~~
~~P3.0~~	~~12x40 FLOOR MTD OPTION 1 (A) (B) (C)~~
~~P3.1~~	~~12x40 FLOOR MTD OPTION 2 (A) (B)~~
~~P3.2~~	~~12x40 FLOOR MTD OPTION 3 (A) (B)~~
Foundation	
F1.10	WOOD FOUNDATION PLAN
~~F2.10~~	~~CONCRETE FOUNDATION PLAN~~
~~F2.20~~	~~CONCRETE FOUNDATION DETAILS~~
~~F2.23~~	~~CONCRETE FOUNDATION DETAILS~~
Structural	
S0.1	STRUCTURAL GEN NOTES
S1.0.1	WOOD SHEATHING FLOOR FRAMING PLAN
~~S1.1.1~~	~~CONC. FLOOR FRAMING PLAN~~
S1.2	STRUCTURAL DETAILS (FLOOR)
S3.0	ROOF FRAMING PLAN
S3.1	STRUCTURAL DETAILS (ROOF)
~~S3.2~~	~~ROOF DETAILS (SOFFIT/PARAPET)~~
S3.3	ROOF PERIMETER TRUSS
~~S4.0~~	~~MTL WALL FRAMING ELEVATIONS~~
S4.1	WD WALL FRAMING ELEVATIONS
S4.2	WALL DETAILS (WOOD FRAMING)
~~S4.3~~	~~WALL DETAILS (MTL FRAMING)~~
S4.4	TYP FRAMING
S4.5	FRAMING SCHEDULES
~~S5.0~~	~~LONG. SECTION - (MONO)~~
S5.1	LONG SECTION - (DUAL)
~~SR0~~	~~MODULE PLAN AND NOTES~~
~~SR1~~	~~RAMP LANDING~~
~~SR2~~	~~LANDING FRAME~~
~~SR3~~	~~FOUNDATION PLAN~~
~~SR4~~	~~RAMP ELEVATION~~
~~SR5~~	~~RAMP DETAILS~~
~~SR6~~	~~RAMP DETAILS~~
~~SR7~~	~~STAIR CONN~~
Under Separate Cover	
~~FS-1~~	~~DETAILS - FS1 - CLASS LEASING BATHROOM~~
~~FS-2~~	~~PLANS - FS2 - CLASS LEASING BATHROOM~~
~~FS-3~~	~~PLANS - FS3 - CLASS LEASING BATHROOM~~

ALT-A01 AWNING FRAMING AND CONNECTION DETAILS

C:\Users\Cesar\Documents\17030 - Aries, 12x40 Moment Frame PC - MainFile - High Seismic.rvt 4.26.18_Cesar.rvt

5/7/2018 10:59:45 AM

1 (revision)

PROJECT SPECIFIC BUILDING REQUIREMENTS FOR:
FIRE HAZARD SEVERITY ZONE. CBC CHAPTER 7A.

ROOF COVERING: (C.B.C. SECTION 705A)
26 GA. GALV. STEEL (NON-COMBUSTIBLE) INTERLOCKED STANDING SEAM ROOF PANELS W/ NO SPACE BETWEEN ROOF PANELS AND ROOF DECKING.
STANDING SEAM ROOF OVER ONE LAYER #15 ROOF FELT. (CBC 705A.2)

ROOF GUTTERS: (C.B.C. SECTION 705A.4)
SHALL BE SCREENED WITH A CORROSION-RESISTANT NONCOMBUSTIBLE WIRE MESH WITH 1/4" (6mm) OPENINGS OR EQUAL.

SOFFITS: (C.B.C. SECTION 707A.5)
NON COMBUSTIBLE CEMENT FIBER BOARD.
("LP SMARTSIDE" OR EQUAL)

EXTERIOR WALL FINISH: (C.B.C. SECTION 707A.3)
NON COMBUSTIBLE CEMENT FIBER SIDING.
("LP SMARTSIDE" OR EQUAL)

VERTICAL EXTERIOR WALL VENTS & SOFFIT VENTS: (C.B.C. SEC. 706A)
SCREENED WITH A CORROSION-RESISTANT NONCOMBUSTIBLE WIRE MESH WITH 1/16" (1.6mm) MIN. OPENINGS AND NOT TO EXCEED 1/8" (3.2mm).

EXTERIOR WINDOWS: (C.B.C. SECTION 708A.2.1)
METAL FRAME, TEMPERED GLASS.
OR ASSEMBLY OF FIRE RESIST OF NOT LESS THAN 20 MINUTES.

EXTERIOR DOORS: (C.B.C. SECTION 708A3)
NON COMBUSTIBLE METAL DOORS AND FRAME.
OR ASSEMBLY OF FIRE RESIST OF NOT LESS THAN 20 MINUTES.

JUN 1 6 20

CLASS LEASING LLC

PC # 04-116501

(HIGH SEISMIC) **12' x 40' - SW/MF**

@	AT
AB	ANCHOR BOLT
ABC	AGGREGATE BASE COURSE
ABV	ABOVE
AD	AREA DRAIN
ADD	ADDENDUM
ADH	ADHESIVE
ADJ	ADJACENT, ADJUSTABLE
ADOH	ALTERNATE DIRECTION OF HOOK
AFF	ABOVE FINISHED FLOOR
AGG	AGGREGATE
ALT	ALTERNATE
ALUM	ALUMINUM
ANCH	ANCHOR (AGE)
ANOD	ANODIZED
APPRX	APPROXIMATE
ARCH	ARCHITECT (URAL)
ASPH	ASPHALT
AUTO	AUTOMATIC
B	BOTTOM
BB	BOND BEAM
BC	BOTTOM CHORD
BD	BOARD
BEG	BEGIN (ING)
BEL	BELOW
BIT	BITUMINOUS
BJT	BED JOINT
BLDG	BUILDING
BLK	BLOCK ('G, ING)
BLW	BELOW
BM	BEAM
BMK	BENCH MARK
BO*	BOTTOM OF ____________
BPL	BEARING PLATE
BRD	BOARD
BRDG	BRIDGING
BRG	BEARING
BRK	BRICK
BRZ	BRONZE
BS	BOTH SIDES
BTWN	BETWEEN
BVL	BEVELED
BW	BOTH WAYS
C	CHANNEL, COMPRESSION
CAD	CADMIUM
CAM	CAMBER
C/C	CENTER TO CENTER
CEM	CEMENT
CF	CUBIC FOOT
CHAM	CHAMFER
CI	CAST IRON
CIP	CAST-IN-PLACE
CIR	CIRCLE
CIRC	CIRCUMFERENCE
CJ	CONSTRUCTION JOINT
CJT	CONTROL JOINT
CLG	CEILING
CLK	CAULK, ('G, ING)
CLKG	CAULKING
CLR	CLEAR
CLS	CLOSURE
CM	CENTIMETER
CMP	CORRUDATED METAL PIPE
CMU	CONCRETE MASONRY UNIT
CNTR	CENTER
COL	COLUMN
COG	CENTER OF GRAVITY
COMB	COMBINATION
COMP	COMPRESS (ED)(ION)(IBLE)
COMPO	COMPOSITE
CONN	CONNECT (ION)
CONC	CONCRETE
CONST	CONSTRUCT (ION) (ED)
CONT	CONTINUE, CONTINUOUS
CONTR	CONTRACTOR
COR	CORRUGATED
CP	COMPLETE PENETRATION
CPG	COPING
CPR	COPPER
CRS	COURSE (S)
CS	COUNTERSINK
CTSK	COUNTERSUNK SCREW
CU	CUBIC
CX	CONNECTION
CY	CUBIC YARD
D	DEEP, DEPTH
DBL	DOUBLE
DEF	DEFLECTION
DEG	DEGREE
DEM0	DEMOLISH, DEMOLITION
DEP	DEPRESSED
DEPT	DEPARTMENT
DET	DETAIL
DIAG	DIAGONAL
DIA	DIAMETER
DIM	DIMENSION (ED)
DIV	DIVISION
DL	DEAD LOAD
DN	DOWN
DO	DITTO
DP	DAMPROOFING
DWL	DOWEL (ED)
DWG	DRAWING, (S)
E	EAST, MODULUS OF ELASTICITY
EA	EACH
EB	EXPANSION BOLT
EF	EACH FACE
EJT	EXPANSION JOINT
EL	ELEVATION
ELEC	ELECTRIC (AL)
ENCL	ENCLOSURE, ENCLOSED
ENG	ENGINEER
EQ	EQUAL, EQUALIBRIUM
EQUIP	EQUIPMENT
ESTM	ESTIMATE (ED)
EV	EXPANSION BOLT
EW	EACH WAY
EXCA	EXCAVATE (D) (ION)
(E), EXIST	EXISTING
EXMP	EXPANDED METAL PLATE
EXP	EXPOSED
EXPN	EXPANSION
EXS	EXTRA STRONG
EXT	EXTERIOR, EXTERNAL
FAS	FASTENER
FBO	FURNISHED BY OTHERS
FD	FLOOR DRAIN
FHMS	FLATHEAD MACHINE SCREW
FHS	FIRE HOSE STATION
FHWS	FLATHEAD WOOD SCREW
FIN	FINISH (ED)

FIXT	FIXTURE
FJT	FLUSH JOINT
FLR	FLOOR
FLUR	FLUORESCENT
FLEX	FLEXIBLE
FND	FOUNDATION
FO*	FACE OF ____________
FP	FIREPROOF (ED)
FP'G	FIREPROOFING
FR	FRAME (D)(ING)
FRC	FIRE RESISTANT COATING
FRGD	FORGED
FRMG	FRAMING
FT	FOOT, FEET
FTG	FOOTING
FURR	FURRED, FURRING
FV	FIELD VERIFY
GA	GAUGE
GALV	GALVANIZED
GC	GENERAL CONTRACTOR
GI	GALVANIZED IRON
GKT	GASKET
GL	GLASS, GLAZING
GLM	GLULAM
GP	GALVANIZED PIPE
GPM	GALLONS PER MINUTE
GPPL	GYPSUM PLASTER
GRVL	GRAVEL, GRANULAR
GRD	GRADE, GRADING
GRN	GRANITE
GSS	GALVANIZED SHEET STEEL
GT	GROUT
GVL	GRAVEL
GWB	GYPSUM WALLBOARD
GYP	GYPSUM
H	HIGH
HBD	HARDBOARD
HC	HOLLOW CORE
HD	HEAVY DUTY
HDNR	HARDENER
HDR	HEADER
HDWR	HARDWARE
HDWD	HARDWOOD
HES	HIGH EARLY STRENGTH CEMENT
HH	HANDHOLE
HJT	HEADJOINT
HK	HOOK
HM	HOLLOW METAL
HORIZ	HORIZONTAL
HPT	HIGH POINT
HR	HOUR
HSA	HEADED STUD ANCHOR
HSB	HIGH STRENGHT BOLT
HT	HEIGHT
HWD	HARDWOOD
ID	INSIDE DIAMETER
IN	INCHE (ES)
INCL	INCLUDE (D), INCLUDING
INSUL	INSULATE, INSULATION
INT	INTERIOR
INTM	INTERMEDIATE
INV	INVERT
JST	JOIST
JT	JOINT
K	KIP (S)
KO	KNOCKOUT
KSI	KIPS PER SQUARE INCH
L	LONG, LENGTH
LAM	LAMINATE (D)
LB	POUND, LAG BOLT
LBL	LABEL
LC	LIGHT CONTROL
LD	DEVELOPMENT LENGHT
LF	LINEAR FOOT
LH	LEFT HAND
LL	LIVE LOAD
LLH	LONG LEG HORIZONTAL
LLV	LONG LEG VERTICAL
LPT	LOW POINT
LT	LIGHT
LTL	LINTEL
LVL	LEVEL (ING)
LW	LIGHT WEIGHT
LWC	LIGHT WEIGHT CONCRETE
LWF	LIGHT WEIGHT FILL
M	METER (S) MOMENT
MATL	MATERIAL
MAS	MASONRY
MAX	MAXIMUM
MB	MACHINE BOLT
MBR	MEMBER
MCONN	MOMENT CONNECTION
MECH	MECHANICAL
MED	MEDIUM
MET	METAL
MEMB	MEMBER
MEP	MECHANICAL, ELECTRICAL, & PLUMBING
MFD	METAL FLOOR DECKING
MFR	MANUFACTURE (R) (ED)
MID	MID, MIDDLE
MIN	MINIMUM, MINUTE
MISC	MISCELLANEOUS
MM	MILLIMETER (S)
MMB	MEMBRANE
MO	MASONRY OPENING
MOD	MODEL
MODU	MODULAR
MOV	MOVABLE
MTL	MATERIAL
N	NORTH, NEW
NAT	NATURAL
NL	NAILABLE
NMT	NONMETALLIC
NO	NUMBER
NOM	NOMINAL
NTS	NOT TO SCALE
OA	OVERALL
o.c.	ON CENTER
OD	OUTSIDE DIAMETER
OH	OVERHEAD
OHMS	OVALHEAD MACHINE SCREW
OHWS	OVALHEAD WOOD SCREW
OJ	OPEN-WEB JOINT (S)
OPH	OPPOSITE HAND
OPNG	OPENING
OPP	OPPOSITE

PAR	PARALLEL
PBD	PARTICLE BOARD
PCC	PRECAST CONCRETE
PCF	POUNDS PER CUBIC FOOT
PCS	PIECES
PERF	PERFORATE (D)
PERI	PERIMETER
PFB	PREFABRICATE (D)
PFS	POUNDS PER SQUARE FOOT
PL	PLATE
PLBG	PLUMBING
PLF	POUNDS PER LINEAR FOOT
P.L.	PARALLAM
PLWD	PLYWOOD
PMT	PAVEMENT
PNL	PANEL
POSTEN	POST TENSION (D)
PRETEN	PRETENSIONED
POLY	POLYETHYLENE
PR	PAIR
PRJ	PROJECT
PSC	PRESTRESSED CONCRETE
PSF	POUNDS PER SQUARE FOOT
PSI	POUNDS PER SQUARE INCH
PT	POINT
P.T.	PRESSURE TREATED
PTC	POST-TENSIONED CONCRETE
PTD	PAINTED
PVC	POLYVINYL CHLORIDE
PVMT	PAVEMENT
QTY	QUANTITY
R	RADIUS, RISER
RAD	RADIUS
RD	ROOF DRAIN
RECT	RETANGULAR
REF	REFERENCE, REFER TO
REINF	REFORCE (D) (ING)
REM	REMOVE
REQD	REQUIRED
REQS	REQUIREMENTS
RETG	RETAINING
REV	REVISION, REVISED
RFG	ROOFING
RFH	ROOF HATCH
RFL	REFLECT (ED)(IVE)(OR)
RM	ROOM
RO	ROUGH OPENING
RT	FIRE RETARDANT TREATED
RT	RUBBER TILE
RTG	RATING
RVS	REVERSE SIDE
RVT	RIVET
S	SOUTH
SC	SOLID CORE
SCHED	SCHEDULE
SDL	SUPERIMPOSED DEAD LOAD
SDS	SELF DRILL SCREW
SE	STRUCTURAL ENGINEER
SDST	SELF-DRILL, SELF-TAPPING SCREW
SECT	SECTION
SF	SQUARE FOOT, SQUARE FEET
SHO	SHORE, SHORING
SHT	SHEET
SHTH	SHEATHING
SI	SQUARE INCH
SIM	SIMILAR
SL	SLOPE
SLNT	SEALANT
SMS	SHEET METAL SCREW
SOG	SLAB ON GRADE
SPA	SPACE, (ING)
SPC	SPACER
SPEC	SPECIFICATION (S)
SQ	SQUARE
SSTL	STAINLESS STEEL
STG	STAGGERED
STD	STANDARD
STL	STEEL
STOR	STORAGE
STRUCT	STRUCTURE
STR	STRUCTURAL
SYM	SYMETRICAL, SYMETRY
SYS	SYSTEM
T	TOP, TORSION, TREAD
T&B	TOP AND BOTTOM
T&G	TONGUE AND GROOVE
TC	TOP CHORD
TEN	TESION, TENSILE
TEMP	TEMPORARY, TEMPERATURE
THD	THREAD (ED)
THK	THICK (NESS)
TMPD	TEMPERED
TO*	TOP OF ____________
TL	TOTAL LOAD
TR	TREAD
TS	TUBE STEEL
TYP	TYPICAL
UC	UNDERCUT
UGD	UNDERGROUND
UL	UNDEREWRITERS LABORATORY
UND	UNDER
UNF	UNFINISHED
UNO	UNLESS NOTED OTHERWISE
V	SHEAR FORCE, VELOCITY
VB	VAPOR BARRIER
VER	VERIFY
VERT	VERTICAL
VG	VERTICAL GRAIN
VIF	VERIFY IN FIELD
VJ	V-JOINTED
VNR	VENEER
V.T.R.	VENT THROUGH ROOF
W	WEST, WIDTH, WIDE, WIDE FLANGE
W/	WITH
W/O	WITHOUT
WD	WOOD
WI	WROUGHT IRON
WM	WIRE MESH
WP	WATERPROFFING
WPR	WATER REPELLENT
WPT	WORKING POINT
WS	WATER STOP
WT	WEIGHT
WTW	WALL TO WALL (W/W)
WWF	WELDED WIRE FABRIC
WWM	WELDED WIRE MESH

9 — 1" = 1'-0" ***ABBREVIATIONS***

CHABOT
LAS POSITAS CCD
(1) 12 X 40
P-20-2321 B / S /G

BUILDING DESIGN

NUMBER OF STORIES: 1
OCCUPANCY: ~~"E"~~ "B"
CONSTRUCTION TYPE: VB
FLOOR LIVE LOAD: ☒ 50+15 PSF PARTITION ☐ 100 PSF ☐ 150 PSF
FLOOR DEAD LOAD: ☒ WOOD FLOOR - 11 PSF ☐ CONC. FLOOR - 33 PSF

ROOF LIVE LOAD: 20 PSF
ROOF SNOW LOAD: 0 PSF
ROOF DEAD LOAD: 18.5 PSF (INCLUDES SPRINKLERS & 3PSF SOLAR PANEL)
RAMPLIVE LOAD: 100PSF
FLOOD DESIGN: This PC has not been designed to accommodate flood loads. If located in a zone other than X, a letter stamped and signed from a soils engineer is needed to validate the allowable soil values assumed in this PC are still applicable.

BUILDING AREA OVERHANG	**NO OVERHANG**	**WITH**
ALLOWABLE AREA =9,500 sf	☐ 12x40 480sf	☒ 12x40 570sf

*Geo-hazard site specific report must be provided and approved by CGS for building area more than 4000 sf
ALLOWABLE SOIL PRESSURE: ☒ WOOD FTG -1000PSF ☐ CONCRETE FTG 1500PSF

FOUNDATION: ☒ WOOD ☐ CONCRETE
PC IS DESIGNED BASED ON A PINNED CONNECTION TO THE FOUNDATION.

CEC CLIMATE ZONE: 1-16

WIND DESIGN

ULTIMATE DESIGN SPEED: Vult = 130 mph, 3 sec GUST, Kzt = 1.0
RISK CATEGORY: II
EXPOSURE: C

EARTHQUAKE DESIGN

RISK CATEGORY: II
SEISMIC IMPORTANCE FACTOR: I = 1
MAPPED SPECTRAL RESPONSE: Ss = 2.80, S1 = 1.99
SITE CLASS: D
SEISMIC DESIGN CATEGORY: E
Note: For SDC (E) site specific motion analysis is not required if not in a seismic hazard zone and/or meets other exemptions in DSA IR A-4
SHORT/LONG PERIOD SITE COEFFICIENT: Fa = 1.0, Fu = 1.5
DEISIGN SPECTRAL RESPONSE: Sds = 1.867(for building), Sd1 = 1.99,
(Sds=1.867 for other parameters non-structural component anchorage no-cap)
RESPONSE COEFFICIENT, Cs: 0.693(MF),0.373(SW)
RESPONSE MODIFICATION FACTOR, R: 3.5 (SIDE WALLS), 6.5 (END WALLS)
BASIC SEISMIC FORCE-RESISTING SYS: OMF, R = 3.5
ANALYSIS PROCEDURE: EQUIVALENT LATERAL FORCE

5 — 12" = 1'-0" ***DESIGN LOADS***

PARTIAL LIST OF APPLICABLE CODES AS OF January 1, 2017

2016 Administrative Code (CAC), Part 1, Title 24 C.C.R. *
2016 California Building Code (CBC), Part 2, Title 24 C.C.R.
(2015 International Building Code with 2016 California Amendments)
2016 California Electrical Code (CEC), Part 3, Title 24 C.C.R.
(2014 National Electrical Code with 2016 California Amendments)
2016 California Mechanical Code (CMC), Part 4, Tiltle 24 C.C.R.
(2015 Uniform Mechanical Code with 2016 California Amendments)
2016 California Plumbing Code (CPC), Part 5, Title 24 C.C.R.
(2015 Uniform Plumbing Code with 2016 California Amendments)
2016 California Energy Code (CEC), Part 6, Title 24 C.C.R
2016 California Fire Code, Part 9, Title 24 C.C.R.
(2015 International Fire Code with 2016 California Amendments)
2016 California Green Building Standards Code, Part 11, Title 24 C.C.R.
2016 California Referenced Standards, Part 12, Title 24 C.C.R
Title 19 C.C.R., Public Safety, State Fire Marshal Regulations.
2013 ASME A17.1 (W/ CSA B44-13) Safety Code for Elevators and Escalators

PARTIAL LIST OF APPLICABLE STANDARDS

NFPA 13	Automatic Sprinkler Systems	2016 Edition
NFPA 14	Standpipe Systems	2013 Edition
NFPA 17	Dry Chemical Extinguishing Systems	2013 Edition
NFPA 17a	Wet Chemical Systems	2013 Edition
NFPA 20	Stationary Pumps	2016 Edition
NFPA 22	Water Tanks for Private Fire Protection	2013 Edition
NFPA 24	Private Fire Mains	2016 Edition
NFPA 72	National Fire Alarm Code	2016 Edition
NFPA 80	Fire Doors and Other Opening Protectives	2016 Edition
NFPA 2001	Clean Agent Fire Extinguishing Systems	2015 Edition
ICC 300	ICC Standards on Bleachers, Folding and Telescoping Seating and Grand stands	2012 Edition
UL 300	Fire Testing of Fire Extinguishing System for Protection Of Restaurant Cooking Areas	2005 Edition
UL 464	Audible Signal Appliances	2003 Edition
UL 521	Heat Detectors for Fire Protective Signaling Systems	1999 Edition

Reference Code Section for NFPA Standards - 2016 CBC (SFM) Chapter 35. See Chapter 35 for State of California amendments to NFPA Standards.

* California Administrative Code, Part 1, Chapter 10, Administrative Regulations for the California Energy Commission (CEC).

Per the 2016 CCR, Title 24, Part 11 (CALGREEN CODE) Section 5.507.4. This pre-check building is not allowed to be placed:
- Within the 65 CNEL noise contour of a airport;
- Within the 65 CNEL or Ldn noise contour of a freeway, expressway, railroad, or industrial source guideway;
- Or in a location exposed to a noise level of 65 dB Leq-1Hr, during any hour of operation.

3 — 12" = 1'-0" ***DESIGN CODES***

1. FIRE ALARM SUBMITTAL IS DEFERRED UNDER SEPARATE COVER
2. THIS PC HAS BEEN STRUCTURALLY DESIGNED TO SUPPORT THE WEIGHT OF A FIRE SPRINKLER SYSTEM
3. ALLOWABLE AREA IS BASED ON 10'-0" SETBACK FROM ASSUMED LINE
4. PC DESIGNED AS A SINGLE-STORY MODULAR BUILDING
5. SEE STRUCTURAL FOR SOIL TYPES & BEARING STRENGTHS
6. WORK SHALL CONFORM TO TITLE 24 OF THE CALIFORNIA CODE OF REGULATIONS
7. THIS PC IS NOT APPROVED FOR "A" OCCUPANCY USAGE
8. EXTERIOR PROJECTIONS TO BE FIRE PROTECTED WHERE REQUIRED
9. SEE T24 SHEETS FOR REQUIRED ENVELOPE ASSEMBLIES & HVAC SYSTEMS
10. ALL SPECIFICATIONS BASED ON PERFORMANCE AND ABLE TO BE SUBSTITUTED BY "EQUAL" PRODUCTS PENDING APPROVAL BY D.S.A.
11. BUILDINGS TO COMPLY WITH WILDLAND URBAN INTERFACE GUIDELINES WHERE APPLICABLE
12. BUILDING AND SITE FEATURES MUST COMPLY WITH CALGREEN CODE FOR ITS SPECIFIC
13. SHOULD THIS P.C. CLASSROOM BE DESIGNED TO CONNECT TO ANOTHER P.C. CLASSROOM, INTERIOR SOUND TRANSMISSION IN THE WALL AND FLOOR-CEILING ASSEMBLY MUST MEET A MINIMUM STC OF 40 PER CALGREEN
14. BUILDING REQUIRES A 6" SEISMIC SEPERATION TO ANY ADJACENT STRUCTURE

1 — 12" = 1'-0" ***GENERAL NOTES***

IDENTIFICATION STAMP
DIV. OF THE STATE ARCHITECT
APP: 01-119031 INC:
REVIEWED FOR
SS ☑ FLS ☑ ACS ☑
DATE: 10/22/2020

PROFESSIONAL STAMP

REGISTERED PROFESSIONAL ENGINEER
MANNY D. FRISCH
No. S3380
STRUCTURAL
STATE OF CALIFORNIA
11.28.2018

THE PLANS, IDEAS & DESIGNS SHOWN ON THESE DRAWINGS ARE THE PROPERTY OF R&S TAVARES ASSOCIATES, INC. DEVISED SOLELY FOR THIS CONTRACT. THESE PLANS SHALL NOT BE USED, IN WHOLE OR IN PART, FOR ANY PURPOSE FOR WHICH THEY WERE NOT INTENDED WITHOUT THE EXPRESS WRITTEN CONSENT OF R&S TAVARES ASSOCIATES, INC. ©

CLIENT

CLASS LEASING LLC
1221 Harley Knox Boulevard
Perris, CA 92571

ORIGINAL PC STATE AGENCY APPROVAL

FILE NUMBER: PC-128
IDENTIFICATION STAMP
DIVISION OF THE STATE ARCHITECT
APP. NO: 04 - 116501 INCR :
AC RM FLS RF SS KR
DATE 2/13/2019

PROJECT TITLE
12' x 40'

PROJECT SPECIFIC STATE AGENCY APPROVAL

Revision Schedule

#	Description	Date
1	ADD WUI SPECIFICATION	

SHEET TITLE
COVER SHEET

PROJECT NUMBER
17030

DRAWN BY
rMc

CHECKED BY
RT

DATE
11.28.2018

SHEET NO.
A0.0

Proprietary Property of Class Leasing
Proprietary Property of Class Leasing
Proprietary Property of Class Leasing

ARCHITECTURAL

6 General Architectural Sheets 1/4" = 1'-0"	GENERAL ARCHITECTURAL SHEETS	Sheet
COVER SHEET		A0.0
PROJECT OPTIONS SCHEDULE		A0.0.1
TYPICAL KEY PLAN AND SCHEDULE, GEN NOTES		A0.1
SIGNAGE AND SYMBOLS		A0.2
DSA-103 T&I CONCRETE FLOORS		A0.3
DSA-103 T&I PLYWOOD FLOORS		A0.4
CALGREEN SPEC'S		A0.5
CALGREEN SHEET		A0.6
CALGREEN SHEET		A0.7

5 Floor Plan Details 1/4" = 1'-0"	ARCHITECTURAL FLOOR PLANS	Sheet
X Floor Plans	□ Floor Plan - 12'x40' OPTION 1 A/B/C FLOOR PLAN	A1.0
	X Floor Plan - 12'x40' OPTION 2 A/B/ FLOOR PLAN	A1.1
	□ Floor Plan - 12'x40' OPTION 3 A/B FLOOR PLAN	A1.2
	□ Floor Plan - 12'x40' WORK ROOM FLOOR PLAN	

1 Arch Floor Framing Details 1/4" = 1'-0"	ARCHITECTURAL FLOOR FRAMING DETAILS	Sheet
X Wood Floor		A2.9
□ Concrete Floor		A2.9

2 Wall Schedule 1/4" = 1'-0"	ARCHITECTURAL WALL DETAILS												
□ Wood Studs	Detail												Sheet
	Door		ML		Window	Corner	HVAC	Top PLT	6" SEP	1-HR OPT 1	1-HR OPT 2	EXT HDR	INT HDR	
X Sheating										x	x			A2.1
□ Plaster										x	x			A2.2
□ 1-HR Sheating														A2.5
□ 1-HR Plaster														A2.6
□ Metal Stud														
□ Wood Sheating										x	x			A2.3
□ Wood Plaster										x	x			A2.4
□ 1-HR Sheating														A2.7
□ 1-HR Plaster														A2.8
□ Additional Fire Rating Details and Notes														A3.0
X Single OCC. Bathroom														A3.1

4 Ceiling Plans 1/4" = 1'-0"	ARCHITECTURAL CEILING PLANS		Sheet
Reflected Ceiling Plans:	□ 12' x 40' OPTION 1(A)(B)(C)	□ 8 (2'x4') Recessed Light Fixture	A3.2
		□ 12 (1'x8') Pendant Light w/ 4 (1'x16') Recessed Light	A3.2
	X 12' x 40' OPTION 2(A)(B)	X 12 (2'x4') Recessed Light Fixture	A3.2.1
		□ 16 (1'x8') Pendant Light w/ 4 (1'x16') Recessed Light	A3.2.1
	□ 12' x 40' OPTION 3(A)(B)	□ 16 (2'x4') Recessed Light Fixture	A3.2.2
		□ 18 (1'x8') Pendant Light w/ 4 (1'x16') Recessed Light	A3.2.2
	□ 12' x 40' WORK ROOM	□ 16 (2'x4') Recessed Light Fixture	A3.2.3
		□ 18 (1'x8') Pendant Light w/ 4 (1'x16') Recessed Light	A3.2.3
Celing Notes			A3.2.4

3 Ceiling Details 1/4" = 1'-0"	ARCHITECTURAL CEILING DETAILS				
Celing Framing	Detail				Sheet
	Wall	Joists	Access	BLK'G	
X T-GRID	SEE PLAN	SEE PLAN	SEE PLAN	SEE PLAN	A3.3
□ Wood				Typ	A3.4
□ MTL					A3.4

7 Roof Plans 1/4" = 1'-0"	ARCHITECTURAL ROOF PLANS	Sheet
□ Mono		
	□ EPDM	A4.0
	□ Standing Seam	A4.0
	□ Parapet	A4.0
X Dual		
	□ EPDM	A4.0
	X Standing Seam	A4.0

22 Roof Details 1/4" = 1'-0"	ARCHITECTURAL ROOF DETAILS	Sheet
□ Mono		
	□ EPDM	A4.2
	□ Standing Seam	A4.1
	□ Parapet	A4.3
X Dual		
	□ EPDM	A4.2
	X Standing Seam	A4.1

8 Arch Building Section 1/4" = 1'-0"	ARCHITECTURAL BUILDING SECTION	Sheet
X Dual		
	□ EPDM	A6.0
	X Standing Seam	A6.0
Section		A6.0

ARCHITECTURAL

13 Exterior Elevations 1/4" = 1'-0"	ARCHITECTURAL EXTERIOR ELEVATIONS	Detail		Sheet	Detail		Sheet
		Left	Right		Front	Rear	
Exterior Elevations:	□ 12'x40' OPTION 1(A)(B)(C)						
	□ Mono Slope						A5.0
	□ Parapet Roof - Mono Slope						A5.0
	□ Dual Slope						A5.0
	□ 12'x40' OPTION 2(A)(B)						
	□ Mono Slope						A5.0
	□ Parapet Roof - Mono Slope						A5.0
	X Dual Slope						A5.0
	□ 12'x40' OPTION 3(A)(B)						
	□ Mono Slope						A5.0
	□ Parapet Roof - Mono Slope						A5.0
	□ Dual Slope						A5.0

14 Interior Elevations 1/4" = 1'-0"	ARCHITECTURAL INTERIOR ELEVATIONS	Detail				Sheet
		Left	Right	Front	Rear	
Interior Elevations:	□ 12'x40 Option 1(A)(B)(C)					A5.1
	X 12'x40' Option 2(A)(B)					A5.1
	□ 12'x40' Option 3(A)(B)					A5.1

MEP

9 Plumbing 1/4" = 1'-0"	PLUMBING	Sheet
□ 12'x40' Supply & Iso Option 1(A)(B)(C)		P1.0
X 12'x40' Supply & Iso Option 2(A)(B)		P1.2
□ 12'x40' Supply & Iso Option 3(A)(B)		P1.3
□ 12'x40' Waste & Iso Option 1(A)(B)(C)		P2.1
X 12'x40' Waste & Iso Option 1(A)(B)		P2.2
□ 12'x40' Waste & Iso Option 1(A)(B)		P2.3
□ 12'x40' Waste & Iso Option 1(A)(B)(C)		P3.0
□ 12'x40' Waste & Iso Option 1(A)(B)		P3.1
□ 12'x40' Waste & Iso Option 1(A)(B)		P3.2

10 Mechanical 1/4" = 1'-0"	MECHANICAL	Sheet	
		Ceiling Plan	Roof Plan
Mechanical Plans:	□ 12' x 40'	□ Wall Mount	M1.0	M1.0
		□ Roof Mount	M1.0	M1.0

11 Electrical 1/4" = 1'-0"	ELECTRICAL		Sheet
Reflected Ceiling Plans:	□ 12' x 40' OPTION 1(A)(B)(C)	□ 8 (2'x4') Recessed Light Fixture	
		□ 12 (1'x8') Pendant Light w/ 4 (1'x16') Recessed Light	E1.0
	X 12' x 40' OPTION 2 (A)(B)	□ 12 (2'x4') Recessed Light Fixture	
		□ 16 (1'x8') Pendant Light w/ 4 (1'x16') Recessed Light	E1.2
	□ 12' x 40' OPTION 3 (A)(B)	□ 16 (2'x4') Recessed Light Fixture	
		□ 18 (1'x8') Pendant Light w/ 4 (1'x16') Recessed Light	E1.3
	□ WORK ROOM	□ 16 (2'x4') Recessed Light Fixture	
		□ 18 (1'x8') Pendant Light w/ 4 (1'x16') Recessed Light	E1.4

12 Fire Sprinklers Plans 1/4" = 1'-0"	FIRE SPRINKLERS PLANS	Sheet
□ Fire Sprinklers Drawings:	□ Floor Plans	FS-2
	□ Details	FS-1

ACCESSIBLE TOILET AGE GROUPS	Sheet
X ADULT	A3.1 AND P1.0
□ 9 - 12	
□ 5 - 8	
□ 3 - 4	

STRUCTURAL

15 Foundations Plans 1/4" = 1'-0"	FOUNDATION	Sheet
X Wood Foundation Plan:	X 12'x40' (50+15 PSF)	F1.10
	□ 12'x40' (100 PSF)	F1.10
	□ 12'x40' (150 PSF)	F1.10
□ Concrete Foundation Plan		F2.10

16 General Structural Sheets 1/4" = 1'-0"	GENERAL STRUCTURAL SHEETS	Sheet
STRUCTURAL GEN NOTES		S0.1

17 Floor Framing Plans 1/4" = 1'-0"	STRUCTURAL FLOOR FRAMING PLANS	Sheet
X Wood Sheating Floor:	X (50+15 PSF)	S1.01
	□ (100 PSF)	S1.01
	□ (150 PSF)	S1.01
□ Concrete Framing Floor:		
	□ (50+15 PSF)	S1.1.1
	□ (100 PSF)	S1.1.1
	□ (150 PSF)	S1.1.1

19 Floor Framing Details 1/4" = 1'-0"	STRUCTURAL FLOOR FRAMING DETAILS	Sheet
X Wood Framing		S1.2
□ Concrete Framing		S1.2

18 Roof Framing Plans 1/4" = 1'-0"	STRUCTURAL ROOF FRAMING PLANS	Sheet
□ Mono Slope Roof Framing		S3.0.1
X Dual Slope Roof Framing		S3.0.2

20 Wall Framing Details 1/4" = 1'-0"	STRUCTURAL WALL FRAMING DETAILS	
X Wood:		Sheet
	X Framing Elevation	S4.1
	X Wall Details	S4.2
□ Metal:		
	□ Framing Elevation	S4.0
	□ Wall Details	S4.3
X Typ Framing:		S4.4
X Framing Schedule:		S4.5

21 Building Section 1/4" = 1'-0"	STRUCTURAL BUILDING SECTION	Sheet
□ Mono		S5.0
X Dual		S5.1

IDENTIFICATION STAMP
DIV. OF THE STATE ARCHITECT
APP: 01-119031 INC:
REVIEWED FOR
SS ☑ FLS ☑ ACS ☑
DATE: 10/22/2020

PROFESSIONAL STAMP

REGISTERED PROFESSIONAL ENGINEER
MARK D. RENTSCH
No. S3380
STRUCTURAL
STATE OF CALIFORNIA

11.28.2018

THE PLANS, IDEAS & DESIGNS SHOWN ON THESE DRAWINGS ARE THE PROPERTY OF R&S TAVARES ASSOCIATES, INC. DEVISED SOLELY FOR THIS CONTRACT. THESE PLANS SHALL NOT BE USED, IN WHOLE OR IN PART, FOR ANY PURPOSE FOR WHICH THEY WERE NOT INTENDED WITHOUT THE EXPRESS WRITTEN CONSENT OF R&S TAVARES ASSOCIATES, INC. ©

CLIENT

CLASS LEASING LLC
1221 Harley Knox Boulevard
Perris, CA 92571

ORIGINAL PC STATE AGENCY APPROVAL

FILE NUMBER: PC-128
IDENTIFICATION STAMP
DIVISION OF THE STATE ARCHITECT
APP. NO: 04 - 116501 INCR :
AC RM FLS RF SS KR
DATE 2/13/2019

PROJECT TITLE

PROJECT SPECIFIC STATE AGENCY APPROVAL

Revision Schedule

#	Description	Date

SHEET TITLE
PROJECT OPTIONS SCHEDULE

PROJECT NUMBER

DRAWN BY
rMc

CHECKED BY
J RT

DATE
11.28.2018

SHEET NO.
A0.0.1

SHEET OF SHEETS

Door Schedule

Mark	Type	Width	Height	Door Material	Frame Type	Wall Thickness	Hardware
1	D2	3' - 0"	7' - 0"	18GA Hollow Metal	Knock Down	4 7/8"	HW1
2	D2	3' - 0"	7' - 0"	18GA Hollow Metal	Knock Down	4 7/8"	HW2 - No Closure Req'd
3	D1	3' - 0"	7' - 0"	18GA Hollow Metal	Knock Down	5 1/4"	HW3
4	D3	1' - 6"	7' - 0"	18GA Hollow Metal	Knock Down	4 1/8"	HW4

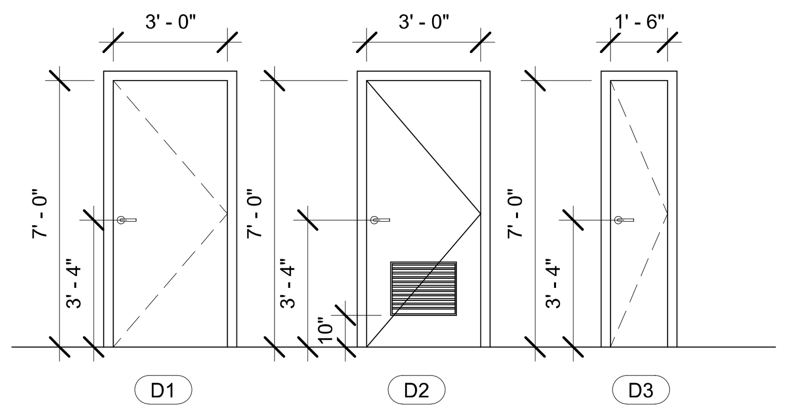

1. ALL DOORS SHALL COMPLY WITH CBC SECTION 11B-404 AND BE 1 3/4" THK (UNO)

2. CENTER ALL DOOR LEVERS FOR ACCESS AND LOCKING @ 40" ABOVE FINISH FLOOR. ALL HARDWARE SHALL OPEN FROM THE INTERIOR AND NOT REQUIRE ANY SPECIFIC KNOWLEDGE OF THE HARDWARE OR REQUIRE ANY SPECIAL EFFORT FOR EGRESS. THE LEVER OF LEVER-ACTUATED LEVERS OR LOCKS SHALL BE CURVED WITH A RETURN TO WITHIN 1/2" OF THE FACE OF THE DOOR TO PREVENT CATCHING ON THE CLOTHING (etc.) OF PERSONS DURING EGRESS. THE LEVER OF LEVER-ACTUATED LEVERS OR LOCKS SHALL EXTEND AT A MINIMUM OF ONE-HALF THE DOOR WIDTH.

3. PER CBC 1008.1.10 FOR ANY ROOM CONFIGURATION WHICH PROVIDES AN OCCUPANT LOAD OF 50 OR GREATER SHALL NOT BE PROVIDED WITH A LATCH OR LOCK UNLESS IT IS PANIC HARDWARE OR FIRE EXIT HARDWARE AND COMPLY WITH ALL REQUIREMENTS OF SECTION 11B-309 OF THE CBC. ALL HARDWARE SHALL COMPLY WITH HARDWARE SCHEDULE THIS SHEET.

4. PER CBC 11B-309.4 THE FORCE REQUIRED TO ACTIVATE OPERABLE PARTS SHALL BE 5 POUNDS (22.2 N) MAX.

5. PER CBC 11B-404.2.8.2 DOOR SPRING HINGES SHALL BE ADJUSTED SO THAT FROM THE OPEN POSITION OF 70 DEGREES, THE DOOR SHALL MOVE TO THE CLOSE POSITION IN 1.5 SECONDS MINIMUM. ALL CLOSER MUST COMPLY WITH CBC 11B-404.2.8.1 - DOOR CLOSER AND GATE CLOSERS SHALL BE ADJUSTED SO THAT FROM AN OPEN POSITION OF 90 DEGREES, THE TIME REQUIRED TO MOVE THE DOOR TO A POSITION OF 12 DEGREES FROM THE LATCH IS 5 SECONDS ~~OR LESS.~~ MINUMUM

6. THE MAXIMUM AREA OF EXTERIOR WALL OPENING PER CBC TABLE 705.8 AND THE FIRE PROTECTION FOR EXTERIOR WALL PER CBC TABLE 602. ALL FIRE PROTECTION BASED ON THE FIRE SEPARATION DISTANCE.

7. DOOR LOCATION MAY VARY BASED ON PROJECT REQUIREMENTS.

8. (PH) ON PLANS THE SHEET INDICATES REQUIRED PANIC HARDWARE.

9. PROVIDE EXIT SIGNS AS REQUIRED PER CBC SECTION 1011. SEE DETAILS PER A0.2

9 *1/4" = 1'-0"* ***Doors***

HARDWARE SCHEDULE

1.BOYS/GIRLS RESTROOMS : HW1

LOCKSET	SCHLAGE ND70PDRHO626 (cylindrical)	Finish 26D or equal
BUTTS	HAGER BB1191 4 1/2" x 4 1/2" NRP	Finish 26D or equal
CLOSER	NORTON 8501 BFDA STRIP (option)	Finish 689 or equal
WEATHER	HAGER 891SAV 3684	Finish Alum or equal
STRIP	HAGER 413SA 36	Finish Alum or equal
THRESHOLD	HAGER 783SAV 35N	Finish Alum or equal
DOOR BOTTOM	ANEMO 24x12	Finish Bronze
LOUVER		

~~**2.STAFF BATHROOM : HW2**~~

~~LOCKSET~~	~~SCHLAGE ND73PDRHO626 (cylindrical)~~	~~Finish 26D or equall~~
~~BUTTS~~	~~HAGER BB1191 4 1/2" x 4 1/2" NRP~~	~~Finish 26D or equal~~
~~WEATHER~~	~~HAGER 891SAV 3684~~	~~Finish Alum or equal~~
~~STRIP~~	~~HAGER 413SA 36~~	~~Finish Alum or equal~~
~~THRESHOLD~~	~~HAGER 783SAV 35N~~	~~Finish Alum or equal~~
~~DOOR BOTTOM~~	~~ANEMO 24x12~~	~~Finish Bronze~~
~~LOUVER~~		

CUSTODIAN

LOCKSET	SCHLAGE ND73PDRHO626 (cylindrical)	Finish 26D or equall
BUTTS	HAGER BB1191 4 1/2" x 4 1/2" NRP	Finish 26D or equal
WEATHER	HAGER 891SAV 3684	Finish Alum or equal
STRIP	HAGER 413SA 36	Finish Alum or equal
THRESHOLD	HAGER 783SAV 35N	Finish Alum or equal
DOOR BOTTOM	ANEMO 24x12	Finish Bronze
LOUVER		

~~**4.WORK ROOM : HW4**~~

~~LOCKSET~~	~~SCHLAGE ND70PDRHO626 (cylindrical)~~	~~Finish 26D or equall~~
~~BUTTS~~	~~HAGER BB1191 4 1/2" x 4 1/2" NRP~~	~~Finish 26D or equal~~
~~THRESHOLD~~	~~HAGER 413SA 36~~	~~Finish Alum or equal~~
~~DOOR BOTTOM~~	~~HAGER 783SAV 35N~~	~~Finish Alum or equal~~

EXTERIOR DOORS:

(CBC SCTION 708.A3)
NON COMBUSTABLE METAL DOORS AND FRAM. OR ASSEMBLY OF FIRE RESIST OF NOT LESS THAN 20 MINUTES.

1

7 *1/4" = 1'-0"* ***Door Hardware***

Finish Schedule

Room Number	Flooring		Wall Finish				Ceiling		Notes
	Floor	Base	Front	Left	Rear	Right	Type	Ht.	
GIRLS	SV	SC	FRP	FRP	FRP	FRP	GBP	8'-0"	
BOYS	SV	SC	FRP	FRP	FRP	FRP	GBP	8'-0"	
CUSTODIAN	SV	SC	FRP	FRP	FRP	FRP	GBP	8'-0"	
~~SINGLE OCC.~~	~~SV~~	~~SC~~	~~FRP~~	~~FRP~~	~~FRP~~	~~FRP~~	~~GBP~~	~~8'-0"~~	
~~WORK ROOM~~	~~CARP~~	~~4" TS~~	~~Tack~~	~~Tack~~	~~Tack~~	~~Tack~~	~~CP~~	~~8'-0"~~	

Abbreviations:

FLOORING
- CARP: CARPET PER STATE OF CALIFORNIA SPECIFICATIONS COMPLYING WITH GROUP 1; TYPE "A" OR TYPE "B"; CLASS 2; DENSITY 4600; DIRECT GLUE DOWN. SEE NOTE (4)
- SV: SHEET VINYL FLOORING. SEE NOTE (2)
- VCT: VINYL COMPOSITION TILE. SEE NOTE (2)

BASE
- 4" TS: 4" TOP SET BASE
- 6" TS: 6" TOP SET BASE

WALLS
- TACK: 1/2" VINYL TACKBOARD CLASS 1 OVER 1/2" GYPSUM BOARD BACKING
- FRP: 1/8" FIBER REINFORCED PANEL OVER 1/2" WATER RESISTANT GYPSUM BOARD
- GYP: 1/2" GYPSUM BOARD; TAPE; TEXTURE; PAINTED FINISH
- PLY: 1/2" PLYWOOD FINISH
- NF: NO FINISH SC: 6" SELF-COVE BASE

CEILING
- CP: ACOUSTICAL LAY IN GRID CEILING PANELS
- HC: 5/8" GYPSUM BOARD; TAPE; TEXTURE; PAINTED FINISH
- GBP: 1/2" GYPSUM BOARD WASHABLE PANELS (PAINTED)

Finishes Notes

1. ALL FINISHES SHALL COMPLY WITH CBC, CCR , AND CFR

2. PER ASTM D2047 ALL FLOORING WITH A COEFFICIENT OF FRICTION OF A MINIMUM OF 0.6 WILL BE CONSIDERED TO OBTAIN THE INTENT OF A SLIP RESISTANCE SURFACE.

3. FLOORING CONTRACTOR IS RESPONSIBLE FOR SUB-FLOORING PREPARATION. ALL PLYWOOD TO BE APA RATED AND COMPLY WITH PS1-09. PLYWOOD SURFACE TO BE CARPETED IS TO BE PLUGGED AND SANDED BY FLOORING CONTRACTOR. ALL DEFORMITIES OCCURRING DUE TO STANDARD CONSTRUCTION PRACTICES SHALL BE PLUGGED AND SANDED BY FLOOR CONTRACTOR. MATELINE JOINTS TO BE A MAX OF 1/8" AND SHALL BE PLUGGED AND SANDED BY FLOORING CONTRACTORS.

4. ALL CARPET AND FLOOR FINISH MUST COMPLY PER CBC SECTION 11B-302 FLOOR AND GROUND SURFACES. ALL CHANGES IN ELEVATION SHALL COMPLY WITH CBC SECTION 11B-303 CHANGES IN LEVELS

4 *1/4" = 1'-0"* ***Finishes and Materials***

MOISTURE PROTECTION INSULATION:

MATERIAL:
INSULATING MATERIAL FOR WALLS, CEILINGS, ANDFLOORS SHALL BE FIBERGLASS BATTS (UNFACED) AND SHALL COMPLY WITH CBC 2016.
(CLASS A = 0-25 FLAME SPREAD:) SMOKE DEVELOPMENT DENSITY LESS THAN 450.

INSULATION VALUES
ALL INSULATION VALUES DESIGNED FOR WORST CASE CLIMATE ZONE. SEE BELOW FOR INSULATION VALUES

EXTERIOR WALL INSULATION (MIN.)
- □ R-19 (2x6) JOHNS MANSVILLE "OR EQUAL"
- □ R-19, CONTINUOUS R-4(MTL STUD) JOHNS MANSVILLE "OR EQUAL"

INTERIOR WALL INSULATION (MIN.)
- □ R-13 JOHNS MANSVILLE "OR EQUAL"

FLOOR INSULATION (MIN.)
- □ WOOD SHTH'G R11 JOHNS MANSVILLE "OR EQUAL"
- □ CONCRETE - UNINSULATED

ROOF INSULATION (MIN.)
- □ R-30(EPDM) JOHNS MANSVILLE "OR EQUAL"
- □ R-30(STANDING SEAM) JOHNS MANSVILLE "OR EQUAL"

6 *1/4" = 1'-0"* ***Insulation Specs***

1. PLACE (2) PERMANENT METAL IDENTIFICATION LABELS ON EACH MODULE.
(1) LABEL AT REAR EXTERIOR
(1) LABEL ABOVE CEILING LINE AT INTERIOR FRAME.
LABELS WILL BE MECHANICALLY FASTENED AND SHOW THE DSA APPLICATION NUMBER, MANUFACTURERS NAME AND SERIAL NUMBER, DESIGN LIVE LOAD FOR ROOF AND FLOOR FRAMING, WIND SPEED, EXPOSURE CATEGORY, AND Kzt = 1.0 PER 2016 CBC

2. VINYL TACKBOARD TO HAVE A CLASS C FLAME SPREAD RATING AND COMPLY WITH A SMOKE DENSITY OF 175

3. VERIFIED ALL DIMENSIONS PRIOR TO CONSTRUCTION

4. SEE INTERIOR ELEVATIONS FOR ALL REQUIRED EGRESS SIGNAGE AND FIRE ALARM SYSTEM COMPONENTS

5. WHEN RELOCATING OR REMOVING INTERIOR PARTITIONS (2) EXITS OR EXIT ACCESS DOORWAYS FROM ANY SPACE SHALL BE PROVIDED. EXIT DOORS MUST BE SEPERATED BY A DISTANCE APART EQUAL TO OR NOT LESS THAN ONE-HALF OF THE MAXUMUM OVERALL DIAGONAL DIMENSION FOR ALL NONSPRINKLERED BUILDINGS. EXIT DOORS MUST BE SEPERATED BY A DISTANCE APART EQUAL TO OR NOT LESS THAN ONE-THIRD OF THE MAXUMUM OVERALL DIAGONAL DIMENSION FOR ALL SPRINKLERED BUILDINGS. ALL EXIT AND EXIT ACCESS DOORWAYS MUST COMPLY WITH CBC SECTION 1015 EXIT AND EXIT ACCESS DOORWAYS AND CBC SECTION 1016 EXIT ACCESS TRAVEL DISTANCE.

6. OCCUPANCY LOAD SIGNS SHALL BE POSTING AND COMPLY WITH CBC SECTION 1004.3

7. SEE ADDITIONAL PC FOR ACCESS RAMPS AND STAIRS. WHERE RAMP IS AGAINST THE WALL AT PLASTER EXTERIOR OR ADJACENT TO ANY ABRASIVE SURFACE THEN A SMOOTH TROWEL SURFACE MUST BE PROVIDED AT THESE LOCATIONS OR AN ALTERNATIVE APPLICATION THAT COMPLIES WITH CBC SECTION 11B-505.8

8. ALL SURFACES ADJACENT TO HANDRAILS SHALL NOT HAVE ANY SHARP, ABRASIVE, OR PROTRUDING COMPONENTS

9. ALL METAL RAILINGS AND CONNECTIONS SHALL HAVE A SMOOTH SURFACE WHICH EXTENDS 8" ABOVE THE HANDRAIL

10. FOR PLASTER WALLS PROVIDE CONTROL JOINTS AT ALL MODLINES, ENDWALLS @ 2'-0 FROM EDGE, 10'-0" o/c @ SIDEWALLS, AND ABOVE AND BELOW ALL OPENING. SEE EXTERIOR ELEVATIONS. ALL MATERIALS, MEANS, METHODS, AND PROCEEDURES OF CONSTRUCTION USED TO PROTECT JOINTS SHALL COMPLY WITH FIRE RATED WALL ASSEMPLY PER CBC SECTION 703.2 - FIRE RESISTANCE RATING AND CBC SECTION 705 - EXTERIOR WALLS

11. FOR HVAC UNITS WHICH HEIGHT FROM GRADE TO BOTTOM OF UNIT EXCEEDS 27" AND LOCATED IN PEDESTRIAN PATH OF TRAVEL, A PROTECTION RAIL AROUND THE HVAC UNIT WILL BE PROVIDED. PER MNF INSTALLATION INSTRUCTIONS

2 *1 1/2" = 1'-0"* ***A0.1 GENERAL NOTES***

Window Schedule Per Work Room

Mark	Type Mark	Height x Width	Function	Type Comments	Glazing	Wall Thickness
A	W1	4'-0" x 8'-0"	XOX	Clear Anodized Alum. Frame	*DP	
B	W2	4'-0" x 8'-0"	XO	Fire Rated Window - 0.048" THK Welded Frame	**FRG	

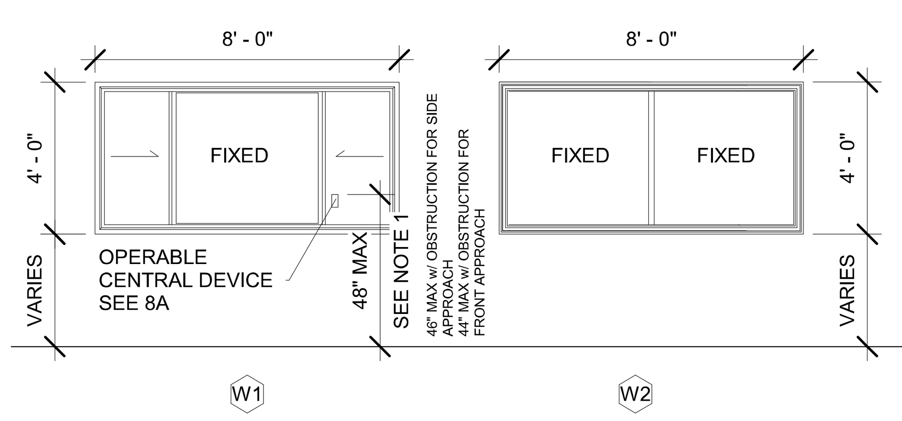

WINDOW LOCATION MAY VARY BASED ON PROJECT REQUIREMENTS.
ONLY (1) WINDOW PER LEFT OR RIGHT WALL
NO WINDOWS PERMITTED ON FRONT OR REAR WALL

INTERNATIONAL WINDOW 6220 - 3/4" INSULATING GLASS UNIT PERFORMANCE
U-VALUE : .35
SHGC: .24

*DP = DUAL PANE TEMPERED GLASS 3/16" THK MIN
SOLAR GRAY 3/16" ENERGY SHIELD WITH 46%
LIGHT TRANMISSION FACTOR
ALL OPERABLE SASH SHALL HAVE SCREENS

**FRG = FIRE RATED GLAZING w/
LABEL MEETING REQUIREMENTS FOR A 3/4 HOUR
(45 MINUTE) FIRE WINDOW ASSEMBLY PER CBC
SECTION (TABLE) 716.6

1. CONTROL DEVICE MUST COMPLY WITH CBC IIB-309
CBC IIB-308

11B-309.4 OPERATION. Operable parts shall be operable with onde hand and shall not require tight grasping, pinching, or twisting of the wrist. The force required to activate operable parts shall be 5 pounds (22.2 N) maximum.

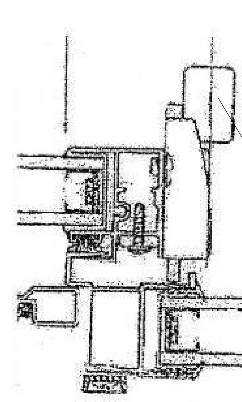

8 *1/4" = 1'-0"* ***Windows*** 8A

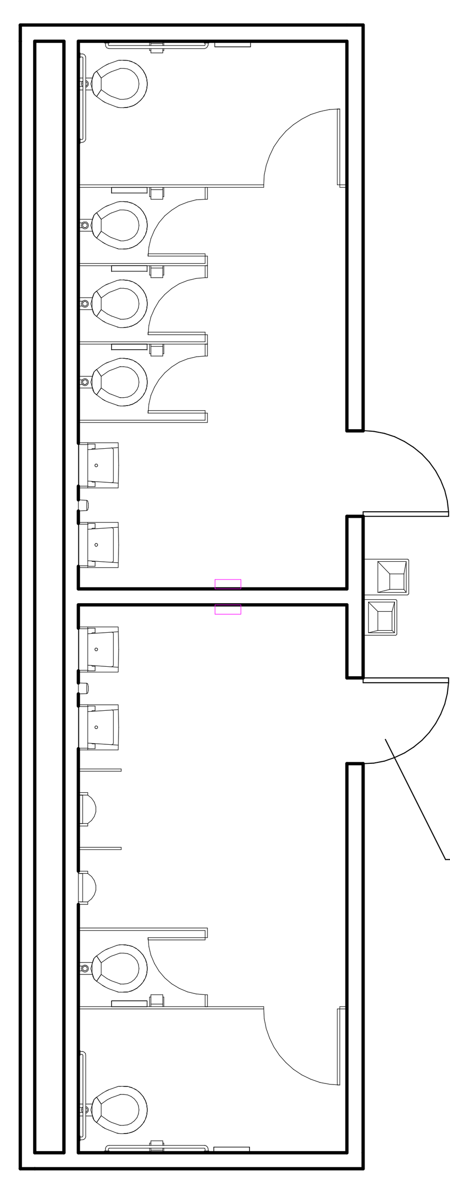

5 *3/16" = 1'-0"* ***12x40 RESTROOM (Total Area 480sf)***

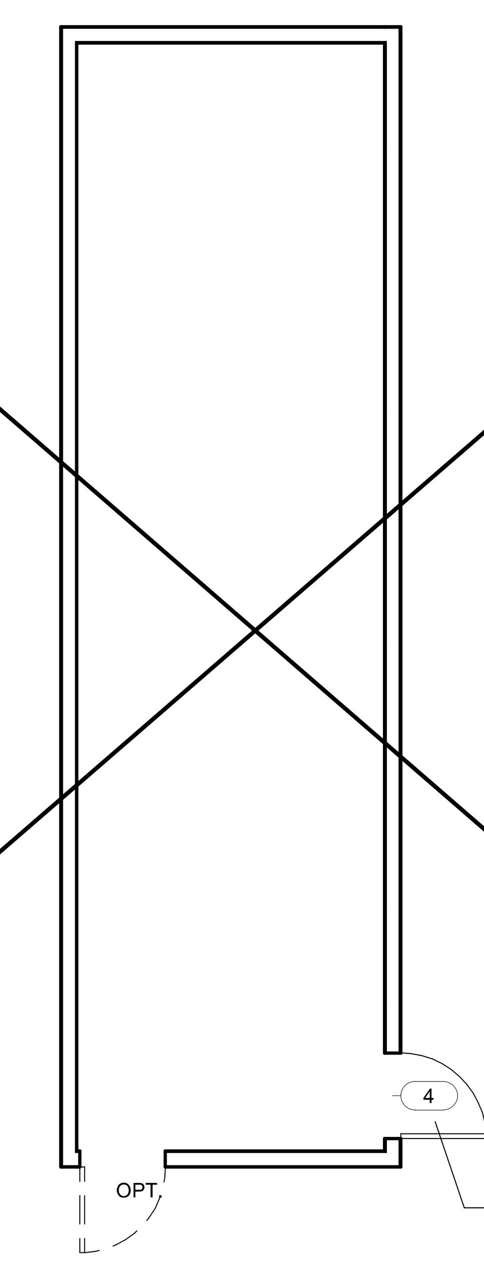

1 *3/16" = 1'-0"* ***12x40 Work Room (Total Area 480sf)***

IDENTIFICATION STAMP
DIV. OF THE STATE ARCHITECT
APP: 01-119031 INC:
REVIEWED FOR
SS ☑ FLS ☑ ACS ☑
DATE: 10/22/2020

PROFESSIONAL STAMP
REGISTERED PROFESSIONAL ENGINEER
MANNY D. FRISCH
No. S3380
STRUCTURAL
STATE OF CALIFORNIA
11.28.2018

THE PLANS, IDEAS & DESIGNS SHOWN ON THESE DRAWINGS ARE THE PROPERTY OF R&S TAVARES ASSOCIATES, INC. DEVISED SOLELY FOR THIS CONTRACT. THESE PLANS SHALL NOT BE USED, IN WHOLE OR IN PART, FOR ANY PURPOSE FOR WHICH THEY WERE NOT INTENDED WITHOUT THE EXPRESS WRITTEN CONSENT OF R&S TAVARES ASSOCIATES, INC. ©

CLIENT
CLASS LEASING LLC
1221 Harley Knox Boulevard
Perris, CA 92571

ORIGINAL PC STATE AGENCY APPROVAL
FILE NUMBER: PC-128
IDENTIFICATION STAMP
DIVISION OF THE STATE ARCHITECT
APP. NO: 04 - 116501 INCR :
AC RM FLS RF SS KR
DATE 2/13/2019

PROJECT TITLE
12' x 40'

PROJECT SPECIFIC STATE AGENCY APPROVAL

Revision Schedule

#	Description	Date
1	ADD WUI SPECIFICATION	

SHEET TITLE
TYPICAL KEY PLAN AND SCHEDULES, GEN NOTES

PROJECT NUMBER
17030

DRAWN BY
rMc

CHECKED BY
RT

DATE
11.28.2018

SHEET NO.
A0.1

Proprietary Property of Class Leasing
Proprietary Property of Class Leasing
Proprietary Property of Class Leasing

~~Advisory 1008.4.2 Clear Floor or Ground Space. Clear floor or ground spaces, turning spaces, and accessible routes are permitted to overlap within play areas. A specific location has not been designated for the clear floor or ground spaces or turning spaces, except swings, because each play component may require that the spaces be placed in a unique location. Where play components include a seat or entry point, designs that provide for an unobstructed transfer from a wheelchair or other mobility device are recommended. This will enhance the ability of children with disabilities to independently use the play component.~~

~~When designing play components with manipulative or interactive features, consider appropriate reach ranges for children seated in wheelchairs. The following table provides guidance on reach ranges for children seated in wheelchairs. These dimensions apply to either forward or side reaches. The reach ranges are appropriate for use with those play components that children seated in wheelchairs may access and reach. Where transfer systems provide access to elevated play components, the reach ranges are not appropriate.~~

~~Children's Reach Ranges~~

Forward or Side Reach	High (maximum)	Low (minimum)
Ages 3 and 4	36 in (915 mm)	20 in (510 mm)
Ages 5 through 8	40 in (1015 mm)	18 in (455 mm)
Ages 9 through 12	44 in (1120 mm)	16 in (405 mm)

CHAPTER 11:COMMUNICATION ELEMENTS AND FEATURES

702 Fire Alarm Systems

702.1 General. Fire alarm systems shall have permanently installed audible and visible alarms complying with NFPA 72 (2016 edition) except that the maximum allowable sound level of audible notification appliances complying with section 4-3.2.1 of NFPA 72 shall have a sound level no more than 110 dB at the minimum hearing distance from the audible appliance. In addition, alarms in guest rooms required to provide communication features shall comply with NFPA 72 (2016 edition)

703 Signs

703.1 General. Signs shall comply with 703. Where both visual and tactile characters are required, either one sign with both visual and tactile characters, or two separate signs, one with visual, and one with tactile characters, shall be provided.

703.2 Raised Characters. Raised characters shall comply with 703.2 and shall be duplicated in braille complying with 703.3. Raised characters shall be installed in accordance with 703.4.

703.2.1 Depth. Raised characters shall be 1/32 inch (0.8 mm) minimum above their background.

703.2.2 Case. Characters shall be uppercase.

703.2.3 Style. Characters shall be sans serif. Characters shall not be italic, oblique, script, highly decorative, or of other unusual forms.

703.2.4 Character Proportions. Characters shall be selected from fonts where the width of the uppercase letter "O" is 60 percent minimum and 110 percent maximum of the height of the uppercase letter "I".

703.2.5 Character Height. Character height measured vertically from the baseline of the character shall be 5/8 inch (15.9 mm) minimum and 2 inches (51 mm) maximum based on the height of the uppercase letter "I".

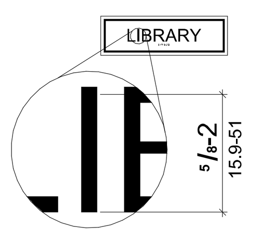

Figure 703.2.5 Height of Raised Characters

703.2.6 Stroke Thickness. Stroke thickness of the uppercase letter "I" shall be 15 percent maximum of the height of the character.

703.2.7 Character Spacing. Character spacing shall be measured between the two closest points of adjacent raised characters within a message, excluding word spaces. Where characters have rectangular cross sections, spacing between individual raised characters shall be 1/8 inch (3.2 mm) minimum and 4 times the raised character stroke width maximum. Where characters have other cross sections, spacing between individual raised characters shall be 1/16 inch (1.6 mm) minimum and 4 times the raised character stroke width maximum at the base of the cross sections, and 1/8 inch (3.2 mm) minimum and 4 times the raised character stroke width maximum at the top of the cross sections. Characters shall be separated from raised borders and decorative elements 3/8 inch (9.5 mm) minimum.

703.2.8 Line Spacing. Spacing between the baselines of separate lines of raised characters within a message shall be 135 percent minimum and 170 percent maximum of the raised character height.

703.3 Braille. Braille shall be contracted (Grade 2) and shall comply with 703.3 and 703.4.

703.3.1 Dimensions and Capitalization. Braille dots shall have a domed or rounded shape and shall comply with Table 703.3.1. The indication of an uppercase letter or letters shall only be used before the first word of sentences, proper nouns and names, individual letters of the alphabet, initials, and acronyms.

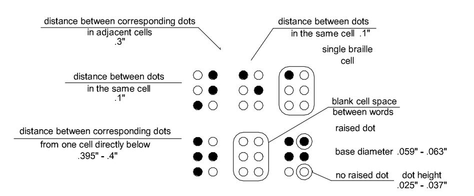

Figure 703.3.1 Braille Measurement

703.3.2 Position. Braille shall be positioned below the corresponding text. If text is multi-lined, braille shall be placed below the entire text. Braille shall be separated 3/8 inch (9.5 mm) minimum from any other tactile characters and 3/8 inch (9.5 mm) minimum from raised borders and decorative elements.

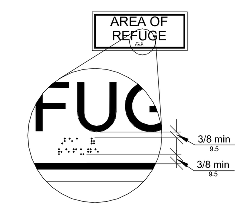

Figure 703.3.2 Position of Braille

703.4 Installation Height and Location. Signs with tactile characters shall comply with 703.4.

703.4.1 Height Above Finish Floor or Ground. Tactile characters on signs shall be located 48 inches (1220 mm) minimum above the finish floor or ground surface, measured from the baseline of the lowest tactile character and 60 inches (1525 mm) maximum above the finish floor or ground surface, measured from the baseline of the highest tactile character.

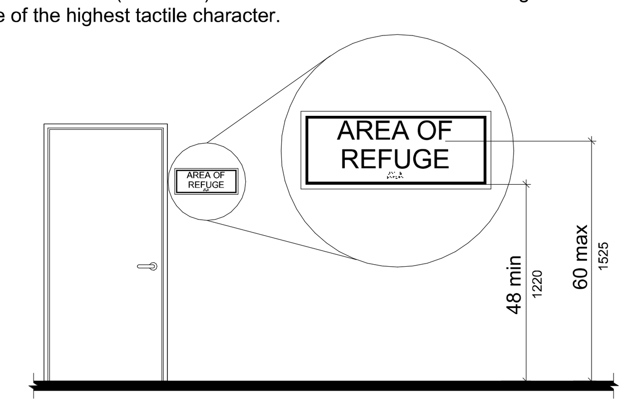

Figure 703.4.1 Height of Tactile Characters Above Finish Floor or Ground

703.4.2 Location. Where a tactile sign is provided at a door, the sign shall be located alongside the door at the latch side. Where a tactile sign is provided at double doors with one active leaf, the sign shall be located on the inactive leaf. Where a tactile sign is provided at double doors with two active leafs, the sign shall be located to the right of the right hand door. Where there is no wall space at the latch side of a single door or at the right side of double doors, signs shall be located on the nearest adjacent wall. Signs containing tactile characters shall be located so that a clear floor space of 18 inches (455 mm) minimum by 18 inches (455 mm) minimum, centered on the tactile characters, is provided beyond the arc of any door swing between the closed position and 45 degree open position.

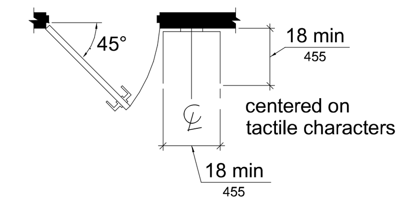

Figure 703.4.2 Location of Tactile Signs at Doors

703.5 Visual Characters. Visual characters shall comply with 703.5.

703.5.1 Finish and Contrast. Characters and their background shall have a non-glare finish. Characters shall contrast with their background with either light characters on a dark background or dark characters on a light background.

703.5.2 Case. Characters shall be uppercase or lowercase or a combination of both.

703.5.3 Style. Characters shall be conventional in form. Characters shall not be italic, oblique, script, highly decorative, or of other unusual forms.

703.5.4 Character Proportions. Characters shall be selected from fonts where the width of the uppercase letter "O" is 60 percent minimum and 110 percent maximum of the height of the uppercase letter "I".

703.5.5 Character Height. Minimum character height shall comply with Table 703.5.5. Viewing distance shall be measured as the horizontal distance between the character and an obstruction preventing further approach towards the sign. Character height shall be based on the uppercase letter "I".

703.5.6 Height From Finish Floor or Ground. Visual characters shall be 40 inches (1015 mm) minimum above the finish floor or ground.

703.5.7 Stroke Thickness. Stroke thickness of the uppercase letter "I" shall be 10 percent minimum and 30 percent maximum of the height of the character.

703.5.8 Character Spacing. Character spacing shall be measured between the two closest points of adjacent characters, excluding word spaces. Spacing between individual characters shall be 10 percent minimum and 35 percent maximum of character height.

703.5.9 Line Spacing. Spacing between the baselines of separate lines of characters within a message shall be 135 percent minimum and 170 percent maximum of the character height.

703.6 Pictograms. Pictograms shall comply with 703.6.

703.6.1 Pictogram Field. Pictograms shall have a field height of 6 inches (150 mm) minimum. Characters and braille shall not be located in the pictogram field.

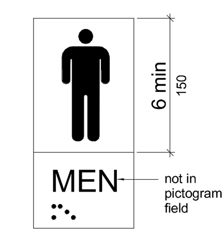

Figure 703.6.1 Pictogram Field dark-on-light.

TABLE *11B*-703.3.1
BRAILLE DIMENSIONS

MEASUREMENT RANGE	MINIMUM IN INCHES MAXIMUM IN INCHES
Dot base diameter	0.059 (1.5 mm) to 0.063 (1.6mm)
Distance between two dots in the same cell[1]	*0.100 (2.5 mm)*
Distance between corresponding dots in adjacent cells[1]	*0.300 (7.6 mm)*
Dot height	0.025 (0.6 mm) to 0.037 (0.9 mm)
Distance between corresponding dots from one cell directly below[1]	0.395 (10 mm) to 0.400 (10.2 mm)

1. Measured center to center.

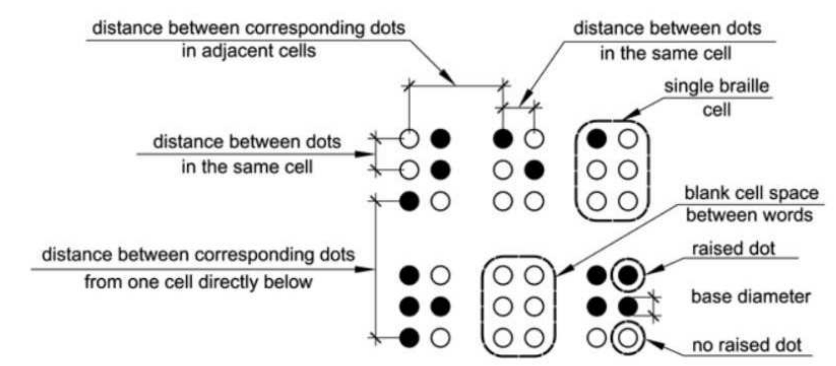

FIGURE *11B*-703.3.1
BRAILLE MEASUREMENT

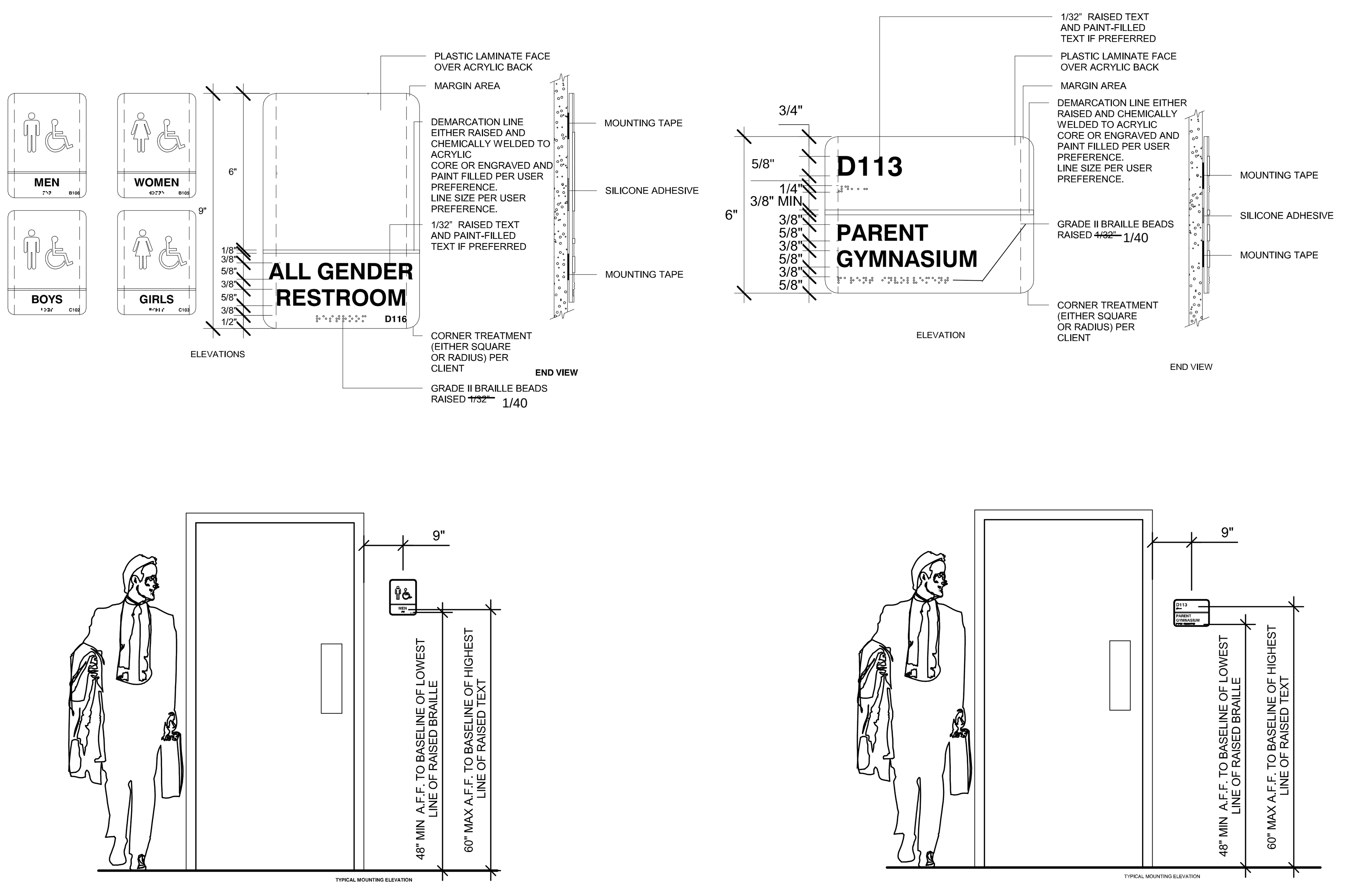

4 *1/2" = 1'-0"*
Signage

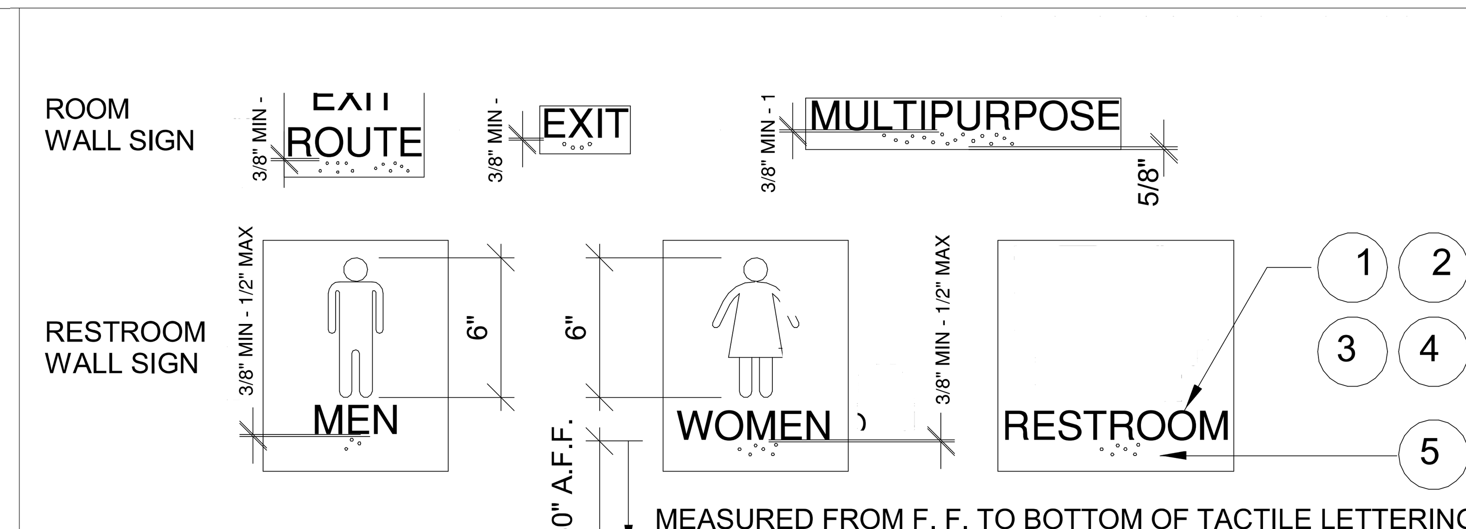

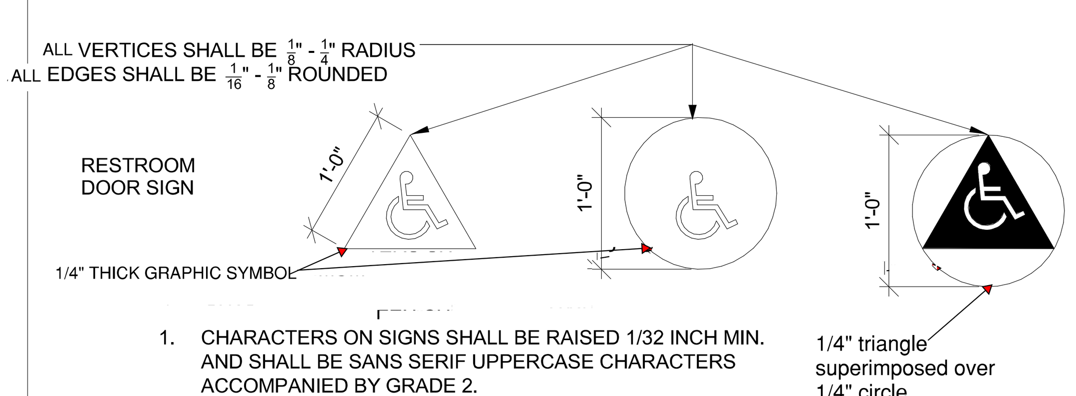

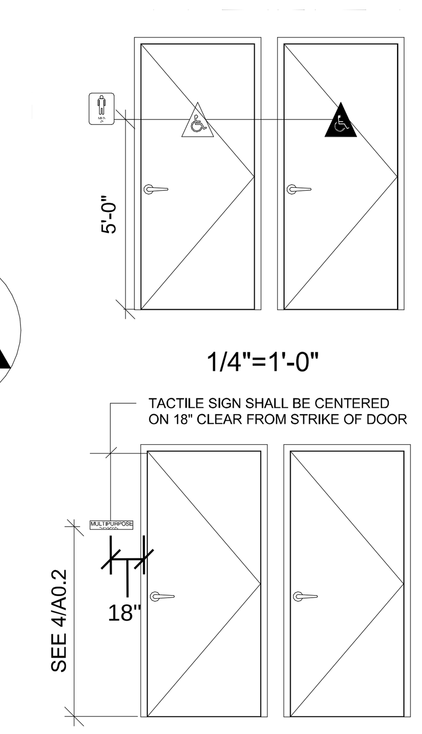

1. CHARACTERS ON SIGNS SHALL BE RAISED 1/32 INCH MIN. AND SHALL BE SANS SERIF UPPERCASE CHARACTERS ACCOMPANIED BY GRADE 2.
2. RAISED CHARACTERS SHALL BE A MINIMUM OF 5/8 INCH AND A MAXIMUM OF 2 INCHES HIGH.
3. CONTRAST BETWEEN CHARACTERS, SYMBOLS AND THEIR BACKGROUND MUST BE 70% MINIMUM AND HAVE A NON-GLARE FINISH. 11B-703-5.1.
4. TRIANGLE OR CIRCLE SMALL CONTRAST WITH ~~DOOR~~ COLOR OF MOUNTING SURFACE. EITHER LIGHT ON A DARK BACKGROUND OR DARK ON A LIGHT BACKGROUND. 11B-703.7:2.6.1 AND 11B-703.2.2.6.2

NOTE: TACTILE SIGN TEXT SHALL BE CENTERED 18" CLEAR FROM STRIKE OF DOOR

3 *1/4" = 1'-0"*
Signage and Notes

SEE ARCHITECT SHEET A1.11s FOR SIGNAGE

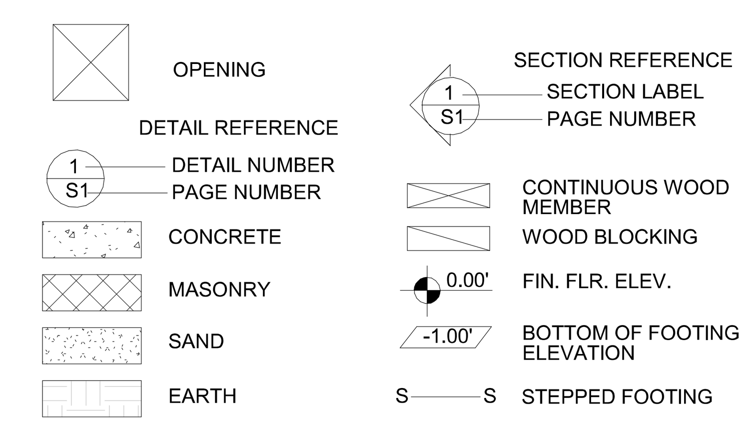

1 *6" = 1'-0"*
Symbols

IDENTIFICATION STAMP
DIV. OF THE STATE ARCHITECT
APP: 01-119031 INC:
REVIEWED FOR
SS ☑ FLS ☑ ACS ☑
DATE: 10/22/2020

PROFESSIONAL STAMP

11.28.2018

THE PLANS, IDEAS & DESIGNS SHOWN ON THESE DRAWINGS ARE THE PROPERTY OF R&S TAVARES ASSOCIATES, INC. DEVISED SOLELY FOR THIS CONTRACT. THESE PLANS SHALL NOT BE USED, IN WHOLE OR IN PART, FOR ANY PURPOSE FOR WHICH THEY WERE NOT INTENDED WITHOUT THE EXPRESS WRITTEN CONSENT OF R&S TAVARES ASSOCIATES, INC. ©

CLIENT

CLASS LEASING LLC
1221 Harley Knox Boulevard
Perris, CA 92571

ORIGINAL PC STATE AGENCY APPROVAL

FILE NUMBER: PC-128
IDENTIFICATION STAMP
DIVISION OF THE STATE ARCHITECT
APP. NO: 04 - 116501 INCR :
AC RM FLS RF SS KR
DATE 2/13/2019

PROJECT TITLE

12' x 40'

PROJECT SPECIFIC STATE AGENCY APPROVAL

Revision Schedule

#	Description	Date

SHEET TITLE

SIGNAGE AND SYMBOLS

PROJECT NUMBER

17030

DRAWN BY

rMc

CHECKED BY

RT

DATE

11.28.2018

SHEET NO.

A0.2

SHEET OF SHEETS

Proprietary Property of Class Leasing
Proprietary Property of Class Leasing
Proprietary Property of Class Leasing

C:\Users\Cesar\Documents\17030 - Aries, 12x40 Moment Frame PC - MainFile.rvt 04.11.18_Cesar.rvt
5/4/2018 8:33:21 AM

DSA-103 Issued 12/30/2016
List of Required Structural Tests & Special Inspections - 2016 CBC

DSA — DIVISION OF THE STATE ARCHITECT — DEPARTMENT OF GENERAL SERVICES

INCREMENT # # | DSA File No.: # | Application No.: # | Date Submitted: # | Revised: # | Revised: #

School Name: | District:

IMPORTANT: This form is only a summary list of structural tests and some of the special inspections required for the project. Generally, the structural tests and special inspections noted on this form are those that will be performed by the Geotechnical Engineer of Record, Laboratory of Record, or Special Inspector. The actual complete test and inspection program must be performed as detailed on the DSA approved documents. The appendix at the bottom of this form identifies work NOT subject to DSA requirements for special inspection or structural testing. The project inspector is responsible for providing inspection of all facets of construction, including but not limited to, special inspections not listed on this form such as structural wood framing, high-load wood diaphragms, cold-formed steel framing, anchorage of non-structural components, etc., per Title 24, Part 2, Chapter 17A.
NOTE: This form is also available for projects submitted for review under the 2007, 2010, and 2013 CBC.

INSTRUCTIONS: Click a plus sign (+) before any category or subcategory to reveal additional tests and special inspections. A shaded box indicates a test or special inspection that may be required, depending on the scope of the construction and other issues. A shaded box can be clicked indicating your selection of that test. **Note:** A minus (-) on a category or subcategory heading indicates that it can be collapsed. However, any selections you may have made will be cleared. Click on the "COMPILE" button to show only the tests and inspections finally selected. **For more information on use of this form, see DSA-103.INSTR.**

Note: References are to the 2016 edition of the California Building Code (CBC) unless otherwise noted.

REQUIRED	TEST OR SPECIAL INSPECTION	TYPE [1]	PERFORMED BY [2]	CODE REFERENCE AND NOTES
+	**SOILS**			
+	**CONCRETE**			Table 1705A.3, ACI 318-14 Sections 26.12 & 26.13
+	**MASONRY**			TMS 402-13/ACI 530-13/ASCE 5-13 Table 3.1.3 & TMS 602-13/ACI 530.1-13/ASCE 6-13 Table 5
-	**STEEL, ALUMINUM**			Table 1705A.2.1, AISC 303-10, AISC 360-10, AISC 341-10, AISC 358-10, AISI S100-07/S2-10
-	**17. STRUCTURAL STEEL, COLD-FORMED STEEL, AND ALUMINUM USED FOR STRUCTURAL PURPOSES**			
	Material Verification:			
X	a. Verify identification of all materials and: • Mill certificates indicate material properties that comply with requirements, • Material sizes, types and grades comply with requirements.	Periodic	*	**2203A.1** (2203.1+), **Table 1705A.2.1 Item 3a-3c;** AISI S100-07/S2-10 Section A2.1 & A2.2, AISI S200-12 Section A3, AISI S220-11 Section A4. * By special inspector or qualified technician when performed off-site.
X	b. Test unidentified materials	Test	LOR	**2203A.1** (2203.1+).
	c. Examine seam welds of HSS shapes	Periodic	SI	DSA IR 17-3.
	Inspection:			
	d. Not used.			
X	e. Verify and document steel fabrication per DSA approved construction documents.	Periodic	SI	Not applicable to cold-formed steel light-frame construction, except for trusses (**1705A.2.4**).
+	**18. HIGH STRENGTH BOLTS:**	RCSC 2009		
-	**19. WELDING:**			**1705A.2.5, Table 1705A.2.1 Items 4 & 5;** DSA IR 17-3, AWS D1.1 and AWS D1.8 for structural steel, AWS D1.2 for Aluminum, AWS D1.3 for cold-formed steel, AWS D1.4 for reinforcing steel. (See Appendix for exemptions.)
	Verification of Materials, Equipment, Welders, etc:			
X	a. Verify weld filler material identification markings per AWS designation listed on the DSA approved documents and the WPS.	Periodic	SI	DSA IR 17-3.
X	b. Verify weld filler material manufacturer's certificate of compliance.	Periodic	SI	DSA IR 17-3.
X	c. Verify WPS, welder qualifications and equipment.	Periodic	SI	DSA IR 17-3.
-	**19.1 SHOP WELDING:**			
X	a. Inspect groove welds, multi-pass fillet welds, single pass fillet welds > 5/16", plug and slot welds	Continuous	SI	**Table 1705A.2.1 Item 5a1-4.** Per AISC 360-10 (and AISC 341-10 as applicable). DSA IR 17-3.
X	b. Inspect single-pass fillet welds ≤ 5/16", floor and roof deck welds	Periodic	SI	**1705A.2.2, Table 1705A.2.1 Item 5a.5 & 5a.6.** Per AISC 360-10 (and AISC 341-10 as applicable). DSA IR 17-3.
X	c. Inspect welding of stairs and railing systems.	Periodic	SI	**1705A.2.1.** Per AISC 360-10 (and AISC 341-10 as applicable). AWS D1.1 & D1.3. DSA IR 17-3.
	d. Verification of reinforcing steel weldability other than ASTM A706	Periodic	SI	**1705A.3.1**; verify carbon equivalent reported on mill certificates. AWS D1.4. DSA IR 17-3.
	e. Inspect welding of reinforcing steel.	Continuous	SI	**1705A.3.1, Table 1705A.3 Item 2, and Table 1705A.2.1 Item 5b, 1903A.8.** AWS D1.4. DSA IR 17-3.
+	**19.2 FIELD WELDING:**			
-	**20. NONDESTRUCTIVE TESTING:**			
X	a. Ultrasonic	Test	LOR	**1705A.2.1 & 1705A.2.5.** AISC 360-10 N5.5, AISC 341-10 App. Q 5.2. AWS D1.1, D1.8. ANSI/ASNT CP-189, SNT-TC-1A. DSA IR 17-2.
X	b. Magnetic Particle	Test	LOR	
	c.	Test	LOR	
	d.	Test	LOR	
+	**21. STEEL JOISTS AND TRUSSES:**			
+	**22. SPRAY APPLIED FIRE-PROOFING:**			
-	**23. ANCHOR BOLTS, ANCHOR RODS, & OTHER STEEL:**			
	a. Anchor Bolts and Anchor Rods	Test	LOR	IR 17-11 Sample and test anchor bolts and anchor rods not readily identifiable.
	b. Threaded rod not used for foundation anchorage.	Test	LOR	Sample and test threaded rods not readily identifiable per procedures noted in IR 17-11
	c.			
+	**WOOD**			
+	**OTHER**			

THE EXAMPLE OF FORM DSA-103s SHOWN ON THIS SHEET ARE FOR ILLUSTRATION PURPOSE ONLY. A FORM DSA-103 IS TO BE COMPLETED FOR EACH APPLICATION THAT THIS PC IS BEING INCORPORATED INTO AND ALL EXAMPLE FORM DSA-103s ARE TO BE CROSSED OUT ON THIS DRAWING.

3 — 6" = 1'-0" — *DSA-103 PLYWOOD FLOOR (Stockpile)*

DSA-103 Issued 12/30/2016
List of Required Structural Tests & Special Inspections - 2016 CBC
DSA — DIVISION OF THE STATE ARCHITECT — DEPARTMENT OF GENERAL SERVICES
INCREMENT # # | DSA File No.: # | Application No.: # | Date Submitted: # | Revised: # | Revised: #
School Name: | District:
IMPORTANT: This form is only a summary list of structural tests and some of the special inspections required for the project. Generally, the structural tests and special inspections noted on this form are those that will be performed by the Geotechnical Engineer of Record, Laboratory of Record, or Special Inspector. The actual complete test and inspection program must be performed as detailed on the DSA approved documents. The appendix at the bottom of this form identifies work NOT subject to DSA requirements for special inspection or structural testing. The project inspector is responsible for providing inspection of all facets of construction, including but not limited to, special inspections not listed on this form such as structural wood framing, high-load wood diaphragms, cold-formed steel framing, anchorage of non-structural components, etc., per Title 24, Part 2, Chapter 17A.
NOTE: This form is also available for projects submitted for review under the 2007, 2010, and 2013 CBC.
INSTRUCTIONS: Click a plus sign (+) before any category or subcategory to reveal additional tests and special inspections. A shaded box indicates a test or special inspection that may be required, depending on the scope of the construction and other issues. A shaded box can be clicked indicating your selection of that test. Note: A minus (-) on a category or subcategory heading indicates that it can be collapsed. However, any selections you may have made will be cleared. Click on the "COMPILE" button to show only the tests and inspections finally selected. For more information on use of this form, see DSA-103.INSTR.
Note: References are to the 2016 edition of the California Building Code (CBC) unless otherwise noted.

REQUIRED	TEST OR SPECIAL INSPECTION	TYPE [1]	PERFORMED BY [2]	CODE REFERENCE AND NOTES
-	**SOILS**			
-	**1. GENERAL:**	Table 1705A.6		
X	a. Verify that: • sita has bean prepared properly prior to placement of controlled fill and/or excavations for foundations, • foundation excavations are extended to proper depth and hava reached proper material, and • materials below footings are adequate to achieve the design bearing capacity.	Periodic	GE*	* By geotechnical engineer or his or her qualified representative. (See Appendix for exemptions.)
-	**2. COMPACTED FILLS:**	Table 1705A.6		
	a. Perform classification and testing of fill materials.	Test	LOR*	* Under the supervision of the geotechnical engineer.
X	b. Verify use of proper materials, densities and inspect lift thicknesses, placement, and compaction during placement of fill.	Continuous	GE*	* By geotechnical enginear or his or her qualified representative.
X	c. Test compaction of fill.	Test	LOR*	* Under the supervision of the geotechnical engineer.
+	**3. DRIVEN DEEP FOUNDATIONS (PILES):**	Table 1705A.7		
+	**4. CAST-IN-PLACE DEEP FOUNDATIONS (PIERS):**			Table 1705A.8
+	**5. RETAINING WALLS:**			
+	**6. OTHER SOILS:**			
-	**CONCRETE**			Table 1705A.3, ACI 318-14 Sections 26.12 & 26.13
-	**7. CAST IN PLACE CONCRETE**			
	Material Verification and Testing:			
X	a. Verify use of required design mix.	Periodic	SI*	**Table 1705A.3 Item 5, 1910A.1** (1909.2.3+). * To ba performed by qualified batch-plant inspector and concrete sampling technician
	b. Identifiy, sample, and test reinforcing steel.	Test	LOR	**1910A.2** (1909.2.4+); ACI 318-14 Section 26.6.1.2. DSA IR 17-10
X	c. During concrete placement, fabricate specimens for strength tests, perform slump and air content tests, and determine the temperature of the concrete.	Test	LOR	**Table 1705A.3 item 6**; ACI 318-14 Sections 26.5 & 26.12
X	d. Test concrete (f'_c).	Test	LOR	**1905A.1.16** (1909.3.7+); ACI 318-14 Section 26.12.
	Inspection:			
X	e. Batch plant inspection ● Continuous ○ Periodic	See Notes	SI	Default of '**Continuous**' per **1705A.3.3**; If approved by DSA, batch plant inspection may be reduced to '**Periodic**' subject to requirements in Section **1705A.3.3.1** or eliminated per **1705A.3.3.2.** (See Appendix for exemptions.)
	f. Not used.			
	g. Not used.			
	h. Welding of reinforcing steel.	Provide special inspection per STEEL, category 19.1(d) & (a) and/or 19.2(g) & (h) below.		
	I. Not used.			
+	**8. PRESTRESSED CONCRETE (in addition to Cast in Place Concrete tests and inspections):**			
+	**9. PRECAST CONCRETE (in addition to Cast in Place Concrete tests and inspections):**			
+	**10. SHOTCRETE (in addition to Cast in Place Concrete tests and inspections):**			
-	**11. POST-INSTALLED ANCHORS:**			
X	a. Inspect installation of post-installed anchors	See Notes	SI*	**Table 1705A.3 Item 4a (Continuous) & 4b (Periodic)** (see Appendix for exemptions). ACI 318-14 Sections 17.8 & 26.13 * May be performed by the project inspector when specifically approved by DSA.
X	b. Test post-installed anchors.	Test	LOR	**1910A.5** (1909.2.7+). (See Appendix for exemptions.)
+	**12. OTHER CONCRETE:**			
+	**MASONRY**			TMS 402-13/ACI 530-13/ASCE 5-13 Table 3.1.3 & TMS 602-13/ACI 530.1-13/ASCE 6-13 Table 5
-	**STEEL, ALUMINUM**			Table 1705A.2.1, AISC 303-10, AISC 360-10, AISC 341-10, AISC 358-10, AISI S100-07/S2-10
-	**17. STRUCTURAL STEEL, COLD-FORMED STEEL, AND ALUMINUM USED FOR STRUCTURAL PURPOSES**			
	Material Verification:			
X	a. Verify identification of all materials and: • Mill certificates indicate material properties that comply with requirements, • Material sizes, types and grades comply with requirements.	Periodic	*	**2203A.1** (2203.1+), **Table 1705A.2.1 Item 3a-3c;** AISI S100-07/S2-10 Section A2.1 & A2.2, AISI S200-12 Section A3, AISI S220-11 Section A4. * By special inspector or qualified technician when performed off-site.
X	b. Test unidentified materials	Test	LOR	**2203A.1** (2203.1+).
	c. Examine seam welds of HSS shapes	Periodic	SI	DSA IR 17-3.
	Inspection:			
	d. Not used.			
X	e. Verify and documant steel fabrication per DSA approved construction documents.	Periodic	SI	Not applicabla to cold-formed steel light-frame construction, excapt for trusses (**1705A.2.4**).
+	**18. HIGH STRENGTH BOLTS:**	RCSC 2009		
-	**19. WELDING:**			**1705A.2.5, Table 1705A.2.1 Items 4 & 5;** DSA IR 17-3, AWS D1.1 and AWS D1.8 for structural steel, AWS D1.2 for Aluminum, AWS D1.3 for cold-formed steel, AWS D1.4 for rainforcing steel. (See Appendix for exemptions.)
	Verification of Materials, Equipment, Welders, etc:			
X	a. Verify weld filler material identification markings per AWS designation listed on the DSA approved documents and the WPS.	Periodic	SI	DSA IR 17-3.
X	b. Verify weld filler material manufacturer's certificate of compliance.	Periodic	SI	DSA IR 17-3.
X	c. Verify WPS, welder qualifications and equipment.	Periodic	SI	DSA IR 17-3.
-	**19.1 SHOP WELDING:**			
X	a. Inspect groove welds, multi-pass fillet welds, single pass fillet welds > 5/16", plug and slot welds	Continuous	SI	**Table 1705A.2.1 Item 5a1-4.** Per AISC 360-10 (and AISC 341-10 as applicable). DSA IR 17-3.
X	b. Inspect single-pass fillet welds ≤ 5/16", floor and roof deck welds	Periodic	SI	**1705A.2.2, Table 1705A.2.1 Item 5a.5 & 5a.6.** Per AISC 360-10 (and AISC 341-10 as applicable). DSA IR 17-3.
X	c. Inspect welding of stairs and railing systems.	Periodic	SI	**1705A.2.1.** Per AISC 360-10 (and AISC 341-10 as applicable). AWS D1.1 & D1.3. DSA IR 17-3.
	d. Verification of reinforcing steel weldability other than ASTM A706	Periodic	SI	**1705A.3.1**; verify carbon equivalent reported on mill certificates. AWS D1.4. DSA IR 17-3.
	e. Inspect welding of reinforcing steel.	Continuous	SI	**1705A.3.1, Table 1705A.3 Item 2, and Table 1705A.2.1 Item 5b, 1903A.8.** AWS D1.4. DSA IR 17-3.
-	**19.2 FIELD WELDING:**			
	a. Inspect groove welds, multi-pass fillet welds, single pass fillet welds > 5/16", plug and slot welds	Continuous	SI	**Table 1705A.2.1 Item 5a1-4.** Per AISC 360-10 (and AISC 341-10 as applicable). DSA IR 17-3.
X	b. Inspect single-pass fillet welds ≤ 5/16"	Periodic	SI	**Table 1705A.2.1 Item 5a.5.** Per AISC 360-10 (and AISC 341-10 as applicable). DSA IR 17-3.
	c. Inspect end-weldad studs (ASTM A-108) installation (including bend test)	Periodic	SI	**2213A.2** (2212.6.2+); per AISC 360-10 (and AISC 341-10 as applicabla), AWS D1.1. DSA IR 17-3.
	d. Inspect floor and roof deck welds	Periodic	SI	**1705A.2.2, Table 1705A.2.1 Item 5a.6;** per AISC 360 (and AISC 341 as applicable) & AWS D1.3. DSA IR 17-3.
	e. Inspect welding of structural cold-formed steel	Periodic	SI*	**1705A.2.5**; AWS D1.3. * May be performad by the project inspector when specifically approved by DSA. DSA IR 17-3.
	f. Inspect welding of stairs and railing systems	Periodic	SI*	**1705A.2.1**; Per AISC 360-10 (and AISC 341-10 as applicable). AWS D1.1 & D1.3. DSA IR 17-3. * May be performed by tha project inspector when specifically approved by DSA.
	g. Verification of reinforcing steel weldability	Periodic	SI	**1705A.3.1**; verify carbon equivalent reported on mill certificates. DSA IR 17-3.
	h. Inspect welding of reinforcing steel	Continuous	SI	**1705A.3.1, Table 1705A.3 Item 2, and Table 1705A.2.1 Item 5b, 1903A.8.** AWS D1.4. DSA IR 17-3.
-	**20. NONDESTRUCTIVE TESTING:**			
X	a. Ultrasonic	Test	LOR	**1705A.2.1 & 1705A.2.5.** AISC 360-10 N5.5, AISC 341-10 App. Q 5.2. AWS D1.1, D1.8. ANSI/ASNT CP-189, SNT-TC-1A. DSA IR 17-2.
X	b. Magnetic Particle	Test	LOR	
	c.	Test	LOR	
	d.	Test	LOR	
+	**21. STEEL JOISTS AND TRUSSES:**			
+	**22. SPRAY APPLIED FIRE-PROOFING:**			
-	**23. ANCHOR BOLTS, ANCHOR RODS, & OTHER STEEL:**			
	a. Anchor Bolts and Anchor Rods	Test	LOR	IR 17-11 Sample and test anchor bolts and anchor rods not readily identifiable.
	b. Threaded rod not used for foundation anchorage.	Test	LOR	Sample and test threaded rods not readily identifiable per procedures noted in IR 17-11
	c.			
+	**WOOD**			
+	**OTHER**			

THE EXAMPLE OF FORM DSA-103s SHOWN ON THIS SHEET ARE FOR ILLUSTRATION PURPOSE ONLY. A FORM DSA-103 IS TO BE COMPLETED FOR EACH APPLICATION THAT THIS PC IS BEING INCORPORATED INTO AND ALL EXAMPLE FORM DSA-103s ARE TO BE CROSSED OUT ON THIS DRAWING.

2 — 6" = 1'-0" — *DSA-103 PLYWOOD FLOOR (Concrete Foundation)*

DSA-103 Issued 12/30/2016
List of Required Structural Tests & Special Inspections - 2016 CBC
DSA — DIVISION OF THE STATE ARCHITECT — DEPARTMENT OF GENERAL SERVICES
INCREMENT # # | DSA File No.: # | Application No.: # | Date Submitted: # | Revised: # | Revised: #
School Name: | District:
IMPORTANT: This form is only a summary list of structural tests and some of the special inspections required for the project. Generally, the structural tests and special inspections noted on this form are those that will be performed by the Geotechnical Engineer of Record, Laboratory of Record, or Special Inspector. The actual complete test and inspection program must be performed as detailed on the DSA approved documents. The appendix at the bottom of this form identifies work NOT subject to DSA requirements for special inspection or structural testing. The project inspector is responsible for providing inspection of all facets of construction, including but not limited to, special inspections not listed on this form such as structural wood framing, high-load wood diaphragms, cold-formed steel framing, anchorage of non-structural components, etc., per Title 24, Part 2, Chapter 17A.
NOTE: This form is also available for projects submitted for review under the 2007, 2010, and 2013 CBC.
INSTRUCTIONS: Click a plus sign (+) before any category or subcategory to reveal additional tests and special inspections. A shaded box indicates a test or special inspection that may be required, depending on the scope of the construction and other issues. A shaded box can be clicked indicating your selection of that test. Note: A minus (-) on a category or subcategory heading indicates that it can be collapsed. However, any selections you may have made will be cleared. Click on the "COMPILE" button to show only the tests and inspections finally selected. For more information on use of this form, see DSA-103.INSTR.
Note: References are to the 2016 edition of the California Building Code (CBC) unless otherwise noted.

REQUIRED	TEST OR SPECIAL INSPECTION	TYPE [1]	PERFORMED BY [2]	CODE REFERENCE AND NOTES
+	**SOILS**			
+	**CONCRETE**			Table 1705A.3, ACI 318-14 Sections 26.12 & 26.13
+	**MASONRY**			TMS 402-13/ACI 530-13/ASCE 5-13 Table 3.1.3 & TMS 602-13/ACI 530.1-13/ASCE 6-13 Table 5
-	**STEEL, ALUMINUM**			Table 1705A.2.1, AISC 303-10, AISC 360-10, AISC 341-10, AISC 358-10, AISI S100-07/S2-10
-	**17. STRUCTURAL STEEL, COLD-FORMED STEEL, AND ALUMINUM USED FOR STRUCTURAL PURPOSES**			
	Material Verification:			
X	a. Verify identification of all materials and: • Mill certificates indicate material properties that comply with requirements, • Material sizes, types and grades comply with requirements.	Periodic	*	**2203A.1** (2203.1+), **Table 1705A.2.1 Item 3a-3c;** AISI S100-07/S2-10 Section A2.1 & A2.2, AISI S200-12 Section A3, AISI S220-11 Section A4. * By special inspector or qualified technician when performed off-site.
X	b. Test unidentified materials	Test	LOR	**2203A.1** (2203.1+).
	c. Examine seam welds of HSS shapes	Periodic	SI	DSA IR 17-3.
	Inspection:			
	d. Not used.			
X	e. Verify and document steel fabrication per DSA approved construction documents.	Periodic	SI	Not applicable to cold-formed steel light-frame construction, except for trusses (**1705A.2.4**).
+	**18. HIGH STRENGTH BOLTS:**	RCSC 2009		
-	**19. WELDING:**			**1705A.2.5, Table 1705A.2.1 Items 4 & 5;** DSA IR 17-3, AWS D1.1 and AWS D1.8 for structural steel, AWS D1.2 for Aluminum, AWS D1.3 for cold-formed steel, AWS D1.4 for reinforcing steel. (See Appendix for exemptions.)
	Verification of Materials, Equipment, Welders, etc:			
X	a. Verify weld filler material identification markings per AWS designation listed on the DSA approved documents and the WPS.	Periodic	SI	DSA IR 17-3.
X	b. Verify weld filler material manufacturer's certificate of compliance.	Periodic	SI	DSA IR 17-3.
X	c. Verify WPS, welder qualifications and equipment.	Periodic	SI	DSA IR 17-3.
-	**19.1 SHOP WELDING:**			
X	a. Inspect groove welds, multi-pass fillet welds, single pass fillet welds > 5/16", plug and slot welds	Continuous	SI	**Table 1705A.2.1 Item 5a1-4.** Per AISC 360-10 (and AISC 341-10 as applicable). DSA IR 17-3.
X	b. Inspect single-pass fillet welds ≤ 5/16", floor and roof deck welds	Periodic	SI	**1705A.2.2, Table 1705A.2.1 Item 5a.5 & 5a.6.** Per AISC 360-10 (and AISC 341-10 as applicable). DSA IR 17-3.
X	c. Inspect walding of stairs and railing systems.	Periodic	SI	**1705A.2.1.** Per AISC 360-10 (and AISC 341-10 as applicable). AWS D1.1 & D1.3. DSA IR 17-3.
	d. Verification of reinforcing steel weldability other than ASTM A706	Periodic	SI	**1705A.3.1**; verify carbon equivalent reported on mill certificates. AWS D1.4. DSA IR 17-3.
	e. Inspect welding of reinforcing steel.	Continuous	SI	**1705A.3.1, Table 1705A.3 Item 2, and Table 1705A.2.1 Item 5b, 1903A.8.** AWS D1.4. DSA IR 17-3.
-	**19.2 FIELD WELDING:**			
	a. Inspect groove welds, multi-pass fillet welds, single pass fillet welds > 5/16", plug and slot welds	Continuous	SI	**Table 1705A.2.1 Item 5a1-4.** Per AISC 360-10 (and AISC 341-10 as applicable). DSA IR 17-3.
X	b. Inspect single-pass fillet welds ≤ 5/16"	Periodic	SI	**Table 1705A.2.1 Item 5a.5.** Per AISC 360-10 (and AISC 341-10 as applicable). DSA IR 17-3.
	c. Inspect end-welded studs (ASTM A-108) installation (including bend test)	Periodic	SI	**2213A.2** (2212.6.2+); per AISC 360-10 (and AISC 341-10 as applicable), AWS D1.1. DSA IR 17-3.
	d. Inspect floor and roof deck welds	Periodic	SI	**1705A.2.2, Table 1705A.2.1 Item 5a.6;** per AISC 360 (and AISC 341 as applicable) & AWS D1.3. DSA IR 17-3.
	e. Inspect welding of structural cold-formed steel	Periodic	SI*	**1705A.2.5**; AWS D1.3. * May be performed by the project inspector when specifically approved by DSA. DSA IR 17-3.
	f. Inspect welding of stairs and railing systems	Periodic	SI*	**1705A.2.1**; Per AISC 360-10 (and AISC 341-10 as applicable). AWS D1.1 & D1.3. DSA IR 17-3. * May be performed by the project inspector when specifically approved by DSA.
	g. Verification of reinforcing steel weldability	Periodic	SI	**1705A.3.1**; verify carbon equivalent reported on mill certificates. DSA IR 17-3.
	h. Inspect welding of reinforcing steel.	Continuous	SI	**1705A.3.1, Table 1705A.3 Item 2, and Table 1705A.2.1 Item 5b, 1903A.8.** AWS D1.4. DSA IR 17-3.
-	**20. NONDESTRUCTIVE TESTING:**			
X	a. Ultrasonic	Test	LOR	**1705A.2.1 & 1705A.2.5.** AISC 360-10 N5.5, AISC 341-10 App. Q 5.2. AWS D1.1, D1.8. ANSI/ASNT CP-189, SNT-TC-1A. DSA IR 17-2.
X	b. Magnetic Particle	Test	LOR	
	c.	Test	LOR	
	d.	Test	LOR	
+	**21. STEEL JOISTS AND TRUSSES:**			
+	**22. SPRAY APPLIED FIRE-PROOFING:**			
-	**23. ANCHOR BOLTS, ANCHOR RODS, & OTHER STEEL:**			
	a. Anchor Bolts and Anchor Rods	Test	LOR	IR 17-11 Sample and test anchor bolts and anchor rods not readily identifiable.
	b. Threaded rod not used for foundation anchorage.	Test	LOR	Sample and test threaded rods not readily identifiable per procedures noted in IR 17-11
	c.			
+	**WOOD**			
+	**OTHER**			

THE EXAMPLE OF FORM DSA-103s SHOWN ON THIS SHEET ARE FOR ILLUSTRATION PURPOSE ONLY. A FORM DSA-103 IS TO BE COMPLETED FOR EACH APPLICATION THAT THIS PC IS BEING INCORPORATED INTO AND ALL EXAMPLE FORM DSA-103s ARE TO BE CROSSED OUT ON THIS DRAWING.

1 — 6" = 1'-0" — *DSA-103 PLYWOOD FLOOR (Wood Foundation)*

IDENTIFICATION STAMP
DIV. OF THE STATE ARCHITECT
APP: 01-119031 INC:
REVIEWED FOR
SS ☑ FLS ☑ ACS ☑
DATE: 10/22/2020

PROFESSIONAL STAMP

REGISTERED PROFESSIONAL ENGINEER — MANNY D. FRISCH — No. S3380 — STRUCTURAL — STATE OF CALIFORNIA

11.28.2018

THE PLANS, IDEAS & DESIGNS SHOWN ON THESE DRAWINGS ARE THE PROPERTY OF R&S TAVARES ASSOCIATES, INC. DEVISED SOLELY FOR THIS CONTRACT. THESE PLANS SHALL NOT BE USED, IN WHOLE OR IN PART, FOR ANY PURPOSE FOR WHICH THEY WERE NOT INTENDED WITHOUT THE EXPRESS WRITTEN CONSENT OF R&S TAVARES ASSOCIATES, INC. ©

CLIENT
CLASS LEASING LLC
1221 Harley Knox Boulevard
Perris, CA 92571

ORIGINAL PC STATE AGENCY APPROVAL
FILE NUMBER: PC-128
IDENTIFICATION STAMP
DIVISION OF THE STATE ARCHITECT
APP. NO: 04 - 116501 INCR :
AC RM FLS RF SS KR
DATE 2/13/2019

PROJECT TITLE
12' x 40'

PROJECT SPECIFIC STATE AGENCY APPROVAL

Revision Schedule

#	Description	Date

SHEET TITLE
DSA-103 T&I PLYWOOD FLOORS

PROJECT NUMBER
17030

DRAWN BY
rMc

CHECKED BY
RT

DATE
11.28.2018

SHEET NO.
A0.4

SHEET OF SHEETS

Proprietary Property of Class Leasing
Proprietary Property of Class Leasing
Proprietary Property of Class Leasing

C:\Users\Cesar\Documents\17030 - Aries, 12x40 Moment Frame PC - MainFile.rvt 04.11.18_Cesar.rvt
5/4/2018 1:36:24 PM

CAL GREEN NOTES

CONSTRUCTION WASTE MANAGEMENT

PER 2016 CALGREEN CODE SECTION 5.408.1
CONSTRUCTION WASTE MANAGEMENT MEETS THE FOLLOWING CALGREEN REQUIREMENTS:
I- PERCENTAGE OF WASTE TO BE SALVAGED OR RECYCLED WITH A MINIMUM OF 65% OF NON-HAZARDOUS CONSTRUCTION WASTE.

II- THE CONSTRUCTION AND DEMOLITION MATERIALS WILL BE HANDLED BY A MATERIAL RECOVERY FACILITY (MRF) PROCESSED AND DIVERTED AS NEEDED. THE PROCESS IN PLACE GENERALLY YIELD A 75% OR BETTER DIVERSION RATE.

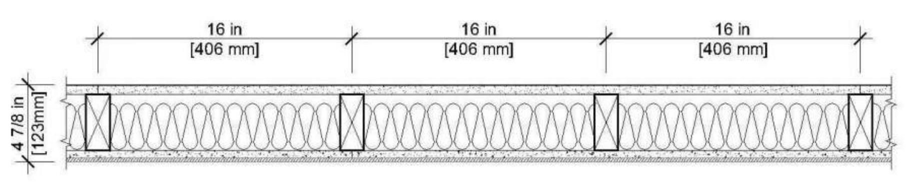

UL U329 or GAP WP 3441 Interior Partitions - Wood Stud	Fire Rating 1 hr.	STC 40 MIN.	Thickness (in.) 4-7/8"

* Gypsum Board - 5/8 in. thick board, applied horizontally or vertically

* Wood Studs - 2 in. x 4 in. wood studs spaced max. 16 in. o/c

* Batts and Blankets - Min. 3-1/2 in. thick mineral wool batt insulation

* Cement Board - 1/2 in. thick board, applied horizontally or vertically

* Bond Coat for Setting Tile - Latex modified portland cement mortar or . 1 type I organic adhesive applied with a notched trowel

* Ceramic Tile - 1/4 in. thick ceramic tile

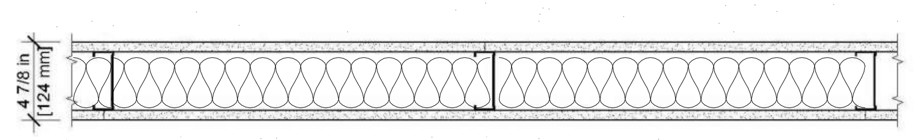

Fire Test UL U465 Steel Stud (Non-loadbearing) Interior Partitions Sound Test: RAL-TL11-125	Fire Rating 1 hr.	STC 40 MIN.	Thickness (in.) 4-7/8"

* Gypsum Board - 5/8 in. thick board, applied vertically, attached to studs with 1 in. long, Type S-12 screws, spaced 8 in. o/c along the edges and 12 in. o/c of the board - SHHETROCK Brand Firecode Core (Type X)

* Steel Studs - 3-5/8 in. wide min. 25 gauge steel. Attached to floor and ceiling with fastners, 24 in o/c - 362S125-18

* Gypsum Board - 5/8 in. thick gypsum board applied vertically or horizontally - SHEETROCK Brand FIRECODE Core (Type X)

* Batts and Blankets - Min. 3-1/2 in. thick mineral wool batt insulation

Moisture control. Exterior door protection:
Nonabsorbent flooring indicated on floor plan, and nonabsorbent interior wall finish indicated on interior elevations.

See sheets A1.0, A1.1, and A1.2 for door protection
See sheet A5.2 for wall finishes

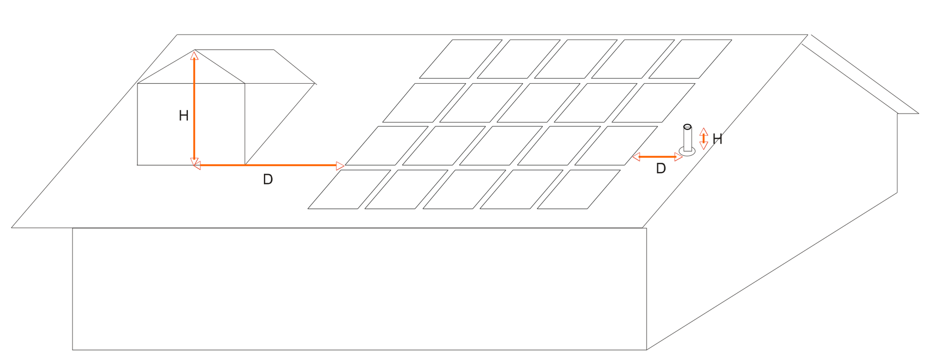

Source: California Energy Commission

Any obstruction, located on the roof or any other part of the building that projects above the solar zone shall be located at a sufficient horizontal distance away from the solar zone, in order to reduce the resulting shading of the solar zone. For each obstruction, the horizontal distance ("D") from the obstruction to the solar zone shall be at least two times the height difference ("H") between the highest point of the obstruction and the horizontal projection of the nearest point of the solar zone.

$D \geq 2 \times H$

SOLAR ZONE DIAGRAM

APPROVED
DIVISION OF STATE ARCHITECT
HIGH PERFORMANCE SECTION
APP.# 04-116501 DATE: 11/30/18

SECTION	SHEET	2016 CALGREEN AND ENERGY CODE COMPLIANCE CHECKLIST FOR PRE-CHECKED (PC) PERMANENT AND MODULAR RELOCATABLE BUILDING DESIGNS				
WATER EFFICIENCY						
5.303.3		**WATER CONSERVING PLUMBING FIXTURES AND FITTINGS:**				
5.303.3	P1.0	PLUMBING FIXTURE FLOW RATES ARE SHOWN ON PLUMBING FIXTURE SCHEDULE.				
MATERIAL CONSERVATION & RESOURCE EFFICIENCY						
5.407.2.2		**WATER RESISTANCE AND MOISTURE MANAGEMEI**				
5.407.2.2.1	A1.0-1.2	PLANS AND FINISH SCHEDULE SHOW THE LOCATION OF THE MINIMUM REQUIRED INTERIOR DOOR PROTECTION AND INDICATE THE NON-ABSORBENT FLOOR AND WALL FINISHES TO BE INSTALLED 2 FEET AROUND AND PERPENDICULAR TO THE PRIMARY ENTRANCES.				
	A1.0-1.2, A6.0-6.3	PLANS AND SECTIONS INDICATE THE MINIMUM EXTERIOR DOOR PROTECTION WITH THE LOCATION AND DETAILS FOR A 4 FEET DEEP AWNING, ROOF OVERHANG, RECESSED AREA, OR OTHER APPROPRIATE METHOD AT THE PRIMARY ENTRANCES.				
5.407.2.2.2	A4.0.1-4.3	ROOF PLANS AND DETAILS INDICATE FLASHINGS INTEGRATED WITH A DRAINAGE PLANE.				
5.408.1		**CONSTRUCTION WASTE MANAGEMEN**				
5.408.1	PDF	PROVIDE A LETTER FROM THE LOCAL WASTE AND RECYCLING FACILITY USED BY THE MANUFACTURER WHICH SPECIFIES A CONSTRUCTION WASTE MANAGEMENT PLAN IDENTIFYING CRITERIA,				
		☑ RECYCLES AND/OR SALVAGES FOR REUSE A MINIMUM OF 65% OF THE NONHAZARDOUS CONSTRUCTION WASTE.				
		☑ THE CONSTRUCTION WASTE MATERIALS TO BE DIVERTED FROM DISPOSAL BY EFFICIENT USAGE, RECYCLING, REUSE ON THE PROJECT, OR SALVAGED FOR FUTURE USE OR SALE.				
		☑ SPECIFIES IF CONSTRUCTION WASTE MATERIALS WILL BE SORTED ON-SITE OR BULK MIXED.				
		☑ DIVERSION FACILITY WHERE CONSTRUCTION WASTE WILL BE TAKEN.				
		☑ SPECIFIES IF THE AMOUNT OF CONSTRUCTION WASTE IS CALCULATED BY WEIGHT OR VOLUME.				
		☑ WASTE MANAGEMENT COMPANY IS ABLE TO PROVIDE VERIFIABLE DOCUMENTATION THAT 65% OF CONSTRUCTION WASTE MATERIAL WILL BE DIVERTED.				
ENVIRONMENTAL QUALITY						
5.504.4		**POLLUTANT CONTROL**				
5.504.4.1		**ADHESIVES, SEALANTS AND CAULKS**				
		FINISH	**WHERE USED (TYPE)**	**MANUFACTURER/SPECIFICATION**	**VOC**	**VOC LIMIT (GPL)**
5.504.4.2	A0.5	Indoor Carpet Adhesives	NuBroadLok, Mohawk Inc.	NuBroadLok, Mohawk Inc.	0	50
		Carpet Pad Adhesives	N/A			
5.504.4.2	A0.5	Cove Base Adhesives	Interior Base	Henry 440	0	50
5.504.4.3	A0.5	Multi-purpose Construction Adhesives 1	General	Liquid Nails - Heavy Duty construction adhesive	70	70
5.504.4.4	A0.5	Contact Adhesive	General	Hankel - Loctite Light Cure	20	70
5.504.4.2	A0.5	Contact Adhesive	General	Hankel - Loctite Light Cure	20	70
5.504.4.1	A0.5	Architectural 1	Exterior	Sherwin williams - 850A White	33	250
5.504.4.1	A0.5	Architectural 2	Exterior	Sherwin williams - Shermax clear	19	250
5.504.4.1	A0.5	Single ply roof Membrane	Roof Caulk/Sealer	Tremco - Future Flash Sealant	6	450
5.504.4.3		**PAINTS AND COATINGS**				
		FINISH	**WHERE USED (TYPE)**	**MANUFACTURER/SPECIFICATION**	**VOC**	**VOC LIMIT (GPL)**
5.504.4.3.1	A0.5	Aerosol Spray Flat Paint	Painted Surface	Krylon	<60	60
5.504.4.3	A0.5	Flat Coatings 1	Painted Surface	Sherwin Williams - Pro Mar 200 Zero	50	50
5.504.4.3	A0.5	Flat Coatings 2	Painted Surface	Dunn Edwards Paints - Acra Hues	40	50
5.504.4.3	A0.5	Flat Coatings 3	Painted Surface	Vista Paints	50	50
		Wall Material 1	FRP Wall Covering	Glassco		
		Wall Material 1	Tackable Wall (Non-absorbent)	Chatfield Clarke		
5.504.4.4		**CARPET SYSTEMS**				
		FINISH	**MANUFACTURER**	**CERTIFICATION ORGANIZATION**		
5.504.4.4	A0.5	Carpet	Mohawk Carpets	Carpet & Rug Institute - Green Label Plus Program		
5.504.4.5		**HARDWOOD PLYWOOD, PARTICLEBOARD, FIBERBOARD WOOD PRODUCTS**				
		FINISH	**WHERE USED (TYPE)**	**MANUFACTURER/SPECIFICATION**	**FORMALDEHYDE EMMISIONS**	**FORMALDEHYDE LIMIT**
5.504.4.5	A0.5	Plywood	Roof / Floor	APA Rated	<.05	0.05
5.504.4.6		**RESILIENT FLOORING SYSTEMS**				
		FINISH	**MANUFACTURER**	**CERTIFICATION ORGANIZATION**		
5.504.4.6	A0.5	Vinyl Composition Tile Flooring	Armstrong / Imperial	CA Dept. of Public Health's 2010 Standard Method for the Testing ...		
	A0.5	Sheet Vinyl Flooring	Mannington	CA Dept. of Public Health's 2010 Standard Method for the Testing ...		
		FRP Wall Covering	Glassco	CA Dept. of Public Health's 2010 Standard Method for the Testing ...		
		Tackable Wall	Chattfield Clarke	CA Dept. of Public Health's 2010 Standard Method for the Testing ...		
5.504.3		**FILTER SPECIFICATION:**				
5.504.3	A0.5	COVERING OF DUCT OPENINGS AND PROTECTION OF MECHANICAL EQUIPMENT DURING CONSTRUCTION AND SHIPMENT.				
5.504.5.3	A0.5	MECHANICAL SPECIFICATION OR NOTE INCLUDES INFORMATION REQUIRING A MINIMUM MERV 8 FILTER(S) OR HIGHER.				
5.505.1		**INDOOR MOISTURE CONTROL:**				
5.505.1	F1.10/F2.10	☑ BUILDING HAS RAISED FLOOR FOUNDATION AND REQUIRES UNDERFLOOR VENTILATION. MEET REQUIREMENTS OF CBC 1203.3.				
5.506.1		**INDOOR AIR QUALITY:**				
5.506.1	M0.1	SPACES ARE DESIGNED WITH OUTDOOR VENTILATION REQUIREMENTS IN ACCORDANCE WITH CALIFORNIA ENERGY CODE (CEC) SECTION 120.1. OUTDOOR AIR CALCULATIONS SHALL BE SHOWN ON THE PLANS IN ACCORDANCE WITH CEC 120.1(a)(2).				
	M0.1	OUTDOOR AIR IN WORKROOM IS DESIGNED TO 0.15 CFM PER SF OR 15 CFM PER OCCUPANT, WHICHEVER IS GREATER .				
5.507.4		**ENVIRONMENTAL COMFORT:**				
5.507.4.1	A0.0	**EXTERIOR NOISE TRANSMISSIO**				
		☑ NOTE ON COVERSHEET THAT STATES - "THIS PC WILL NOT BE PLACED IN ANY OF THE FOLLOWING LOCATIONS: 1- WITHIN THE 65 CNEL NOISE CONTOUR OF AN AIRPORT; 2- WITHIN THE 65 CNEL OR LDN NOISE CONTOUR OF A FREEWAY, EXPRESSWAY, RAILROAD, OR INDUSTRIAL SOURCE GUIDEWAY; 3- WHERE EXPOSED TO NOISE LEVEL OF 65 DB LEQ-1-HR DURING ANY HOUR OF OPERATION."				
5.507.4.3		**INTERIOR SOUND TRANSMISSIO**				
5.507.4.3	A0.5	INTERIOR WALLS MEET MINIMUM 40 STC.				

IDENTIFICATION STAMP
DIV. OF THE STATE ARCHITECT
APP: 01-119031 INC:
REVIEWED FOR
SS ☑ FLS ☑ ACS ☑
DATE: 10/22/2020

PROFESSIONAL STAMP

REGISTERED PROFESSIONAL ENGINEER
MANNY D. FRENCH
No. S3380
STRUCTURAL
STATE OF CALIFORNIA

11.28.2018

THE PLANS, IDEAS & DESIGNS SHOWN ON THESE DRAWINGS ARE THE PROPERTY OF R&S TAVARES ASSOCIATES, INC. DEVISED SOLELY FOR THIS CONTRACT. THESE PLANS SHALL NOT BE USED, IN WHOLE OR IN PART, FOR ANY PURPOSE FOR WHICH THEY WERE NOT INTENDED WITHOUT THE EXPRESS WRITTEN CONSENT OF R&S TAVARES ASSOCIATES, INC. ©

CLIENT

CLASS LEASING LLC
1221 Harley Knox Boulevard
Perris, CA 92571

ORIGINAL PC STATE AGENCY APPROVAL

FILE NUMBER: PC-128
IDENTIFICATION STAMP
DIVISION OF THE STATE ARCHITECT
APP. NO: 04 - 116501 INCR :
AC RM FLS RF SS KR
DATE 2/13/2019

PROJECT TITLE

12' x 40'

PROJECT SPECIFIC STATE AGENCY APPROVAL

Revision Schedule

#	Description	Date

SHEET TITLE
CALGREEN SPEC'S

PROJECT NUMBER
17030

DRAWN BY
rMc

CHECKED BY
RT

DATE
11.28.2018

SHEET NO.
A0.5

SHEET OF SHEETS

Proprietary Property of Class Leasing
Proprietary Property of Class Leasing
Proprietary Property of Class Leasing

C:\Users\Cesar\Documents\17030 - Aries, 12x40 Moment Frame PC - MainFile.rvt 04.11.18_Cesar.rvt
4/25/2018 12:15:52 PM

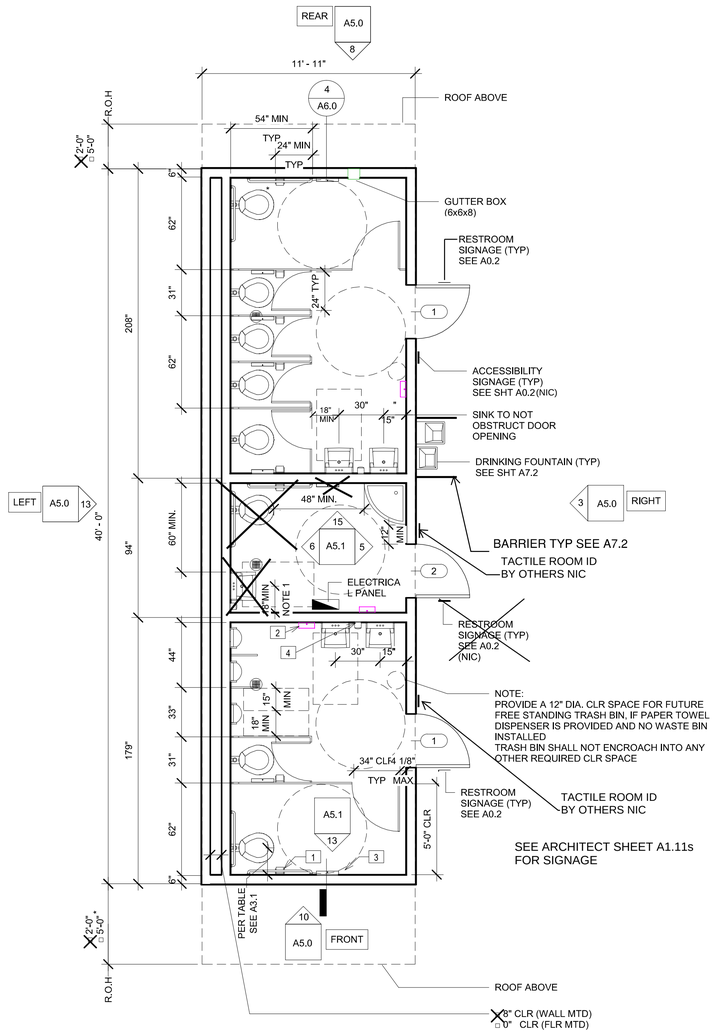

SEE SCHEDULE THIS SHEET FOR WALL MOUNT AND ROOF MOUNT OPTIONS AND PLUMBING SHEETS
* OPT. 5'-0" OVERHANG ALLOWED AT ONLY ONE END OF BUILDING.
** LOCK MECHINSM SHALL NOT REQUIRE GRASPING, PINCHING, OR TUNING OF WRIST.
"U" PULL BARS TO BE LOCATED ON BOTH SIDES OF STALL

1 ***1/4" = 1'-0"***
12x40 B/G/S (A) Floor Plan

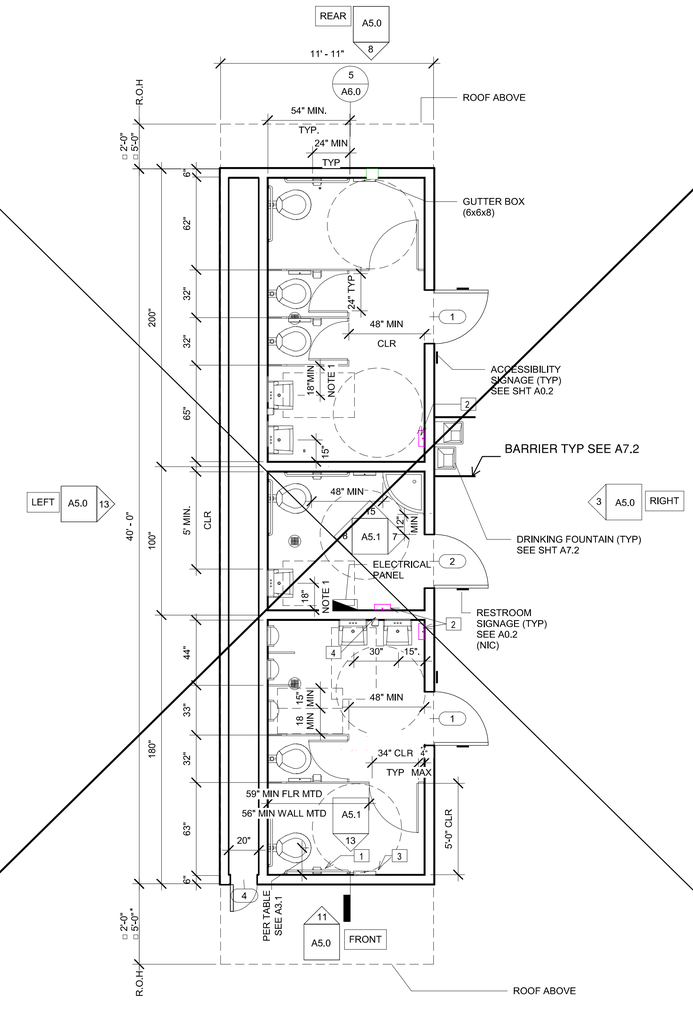

SEE SCHEDULE THIS SHEET FOR WALL MOUNT AND ROOF MOUNT OPTIONS AND PLUMBING SHEETS
* OPT. 5'-0" OVERHANG ALLOWED AT ONLY ONE END OF BUILDING.
** LOCK MECHINSM SHALL NOT REQUIRE GRASPING, PINCHING, OR TUNING OF WRIST.
"U" PULL BARS TO BE LOCATED ON BOTH SIDES OF STALL

6 ***1/4" = 1'-0"***
12x40 B/G/S (B) Floor Plan

Wall Schedule

	Stud Size	Sheet	Notes
X	Nominal 4" Wall Stud (Int. Only)	S4.5	
X	Nominal 6" Wall Stud	S4.5	CONT. R-4 INSUL. - MTL STUD ONLY

5 ***1/4" = 1'-0"***
Wall Schedule

Plumbing Schedule

		Supply	Waste
Option 2(A)	X Wall Mounted	1 / P1.2	2 / P2.2
	□ Floor Mounted		2 / P3.1
Option 2(B)	X Wall Mounted	2 / P1.2	3 / P2.2
	□ Floor Mounted		3 / P3.1

7 ***1/4" = 1'-0"***
PLUMBING FIXTURE SYMBOL

Fire Rating Schedule

	Rating	Sheet	Notes
□	1 HOUR - SIDING OVER WD STUDS	A2.5	WP#8105
□	1 HOUR - PLASTER OVER 1/2" OSB OR 1/2" CDX PLY w/ WD STUDS	A2.6	PER-CBC -TABLE 721.1(2) 15-1.3
□	1 HOUR - SIDING OVER STL STUDS	A2.7	WP#8006
□	1 HOUR - PLASTER OVER 1/2" OSB OR 1/2" CDX PLY w/ STL STUDS	A2.8	PER-CBC -TABLE 721.1(2) 15-1.4

SEE A3.0 FOR ADDITIONAL FIRE ASSEMBLY NOTES AND DETAILS

EXT. WALL - CBC TABLE 721.1

4 ***1/4" = 1'-0"***
Fire Rating Scedule

Ext. Finish Schedule

	Finishes	Sheet	Notes
X	SIDING OVER WD STUDS	A2.1	
□	PLASTER OVER 1/2" OSB OR 1/2" CDX PLY w/ WD STUDS	A2.2	
□	SIDING OVER STL STUDS	A2.3	
□	PLASTER OVER 1/2" OSB OR 1/2" CDX PLY w/ STL STUDS	A2.4	

3 ***1/4" = 1'-0"***
Ext. Finish Scedule

Roofing Schedule

"SLOPE"	EDPM	Standing Seam	Parapet	Notes
Dual	□ A4.0	X A4.0	N/A	
Mono	□ A4.0	□ A4.0	□ A4.0	

2 ***1/4" = 1'-0"***
Roofing Scedule

Clg Schedule

"SLOPE"	Ref	Notes
Gyp	□ A3.4	
T-Grid	X A3.3	

8 ***1/4" = 1'-0"***
Roofing Scedule

1. REQUIRED LOCATION OF LAVATORY TO BE 19" MIN FROM FACE OF FINISH OF WALL - ACCESSORIES HAVING A 4" PROJECTION SHALL NOT ENCROACH INTO THE 30"x48" CLR SPACE

2. FLOOR MOUNTED TOILET FIXTURES SHALL BE USED FOR KINDERGARDEN RESTOOM BUILDINGS

3. VERIFY ALL FIXTURE HEIGHT AND DIMENSIONS PRIOR TO CONSTRUCTION

4. OCCUPANCY LOADS SIGN SHALL COMPLY WITH CHC 1004.3
SEE A0.2

5. SEE RCP SHEET FOR PLUMBING LOCATION DIMENSIONS

6. EXTERIOR DOOR PROTECTION: 4 FOOT DEEP AWNING COVERING NOT ATTACHED TO THE BUILDING IS PROVIDED BY OTHERS AT THE PLANNED PRIMARY ENTRANCE LOCATION WHEN THE BUILDING IS SITED.

12" = 1'-0"
Note

1. TOILET PAPER HOLDER: SINGLE ROLL SEMI-RECESSED OR 3" MAX PROJECTION.

2. PAPER TOWEL DISPENSER/ TRASH BIN COMBO SURFACE MOUNTED 4" MAX PROJECTION-CANNOT ENCROACH INTO 30"x48" CLEAR SPACE OR FIXTURE.

3. TOILET SEAT DISPENSER: SURFACE MOUNTED.

4. SOAP DISPENSER: LIQUID SOAP DISPENSER 4" MAX PROJECTION.

12" = 1'-0"
Legend 1

60" CIRCLE CLEAR SPACE.

30"x48" CLEAR SPACE.

1/4" = 1'-0"
Symbols

HVAC Unit

Keynote	Type	Type Comments
□ M1	Wall Mounted HVAC	See (M)-Sheets
□ M2	Roof Mounted HVAV	See (M)-Sheets

IDENTIFICATION STAMP
DIV. OF THE STATE ARCHITECT
APP: 01-119031 INC:
REVIEWED FOR
SS ☑ FLS ☑ ACS ☑
DATE: 10/22/2020

PROFESSIONAL STAMP

REGISTERED PROFESSIONAL ENGINEER
GERMANY D. RAMOS
No. S3380
STRUCTURAL
STATE OF CALIFORNIA
11.28.2018

THE PLANS, IDEAS & DESIGNS SHOWN ON THESE DRAWINGS ARE THE PROPERTY OF R&S TAVARES ASSOCIATES, INC. DEVISED SOLELY FOR THIS CONTRACT. THESE PLANS SHALL NOT BE USED, IN WHOLE OR IN PART, FOR ANY PURPOSE FOR WHICH THEY WERE NOT INTENDED WITHOUT THE EXPRESS WRITTEN CONSENT OF R&S TAVARES ASSOCIATES, INC. ©

CLIENT

CLASS LEASING LLC
1221 Harley Knox Boulevard
Perris, CA 92571

ORIGINAL PC STATE AGENCY APPROVAL

FILE NUMBER: PC-128
IDENTIFICATION STAMP
DIVISION OF THE STATE ARCHITECT
APP. NO: 04 - 116501 INCR :
AC RM FLS RF SS KR
DATE 2/13/2019

PROJECT TITLE
12' x 40'

PROJECT SPECIFIC STATE AGENCY APPROVAL

Revision Schedule

#	Description	Date

SHEET TITLE
12x40 OPTION 2
A/B FLOOR PLAN

PROJECT NUMBER
17030

DRAWN BY
rMc

CHECKED BY
RT

DATE
11.28.2018

SHEET NO.
A1.1
SHEET OF SHEETS

Proprietary Property of Class Leasing
Proprietary Property of Class Leasing
Proprietary Property of Class Leasing

C:\Users\Cesar\Documents\17030 - Aries, 12x40 Moment Frame PC - MainFile.rvt 04.11.18_Cesar.rvt
5/4/2018 8:33:49 AM

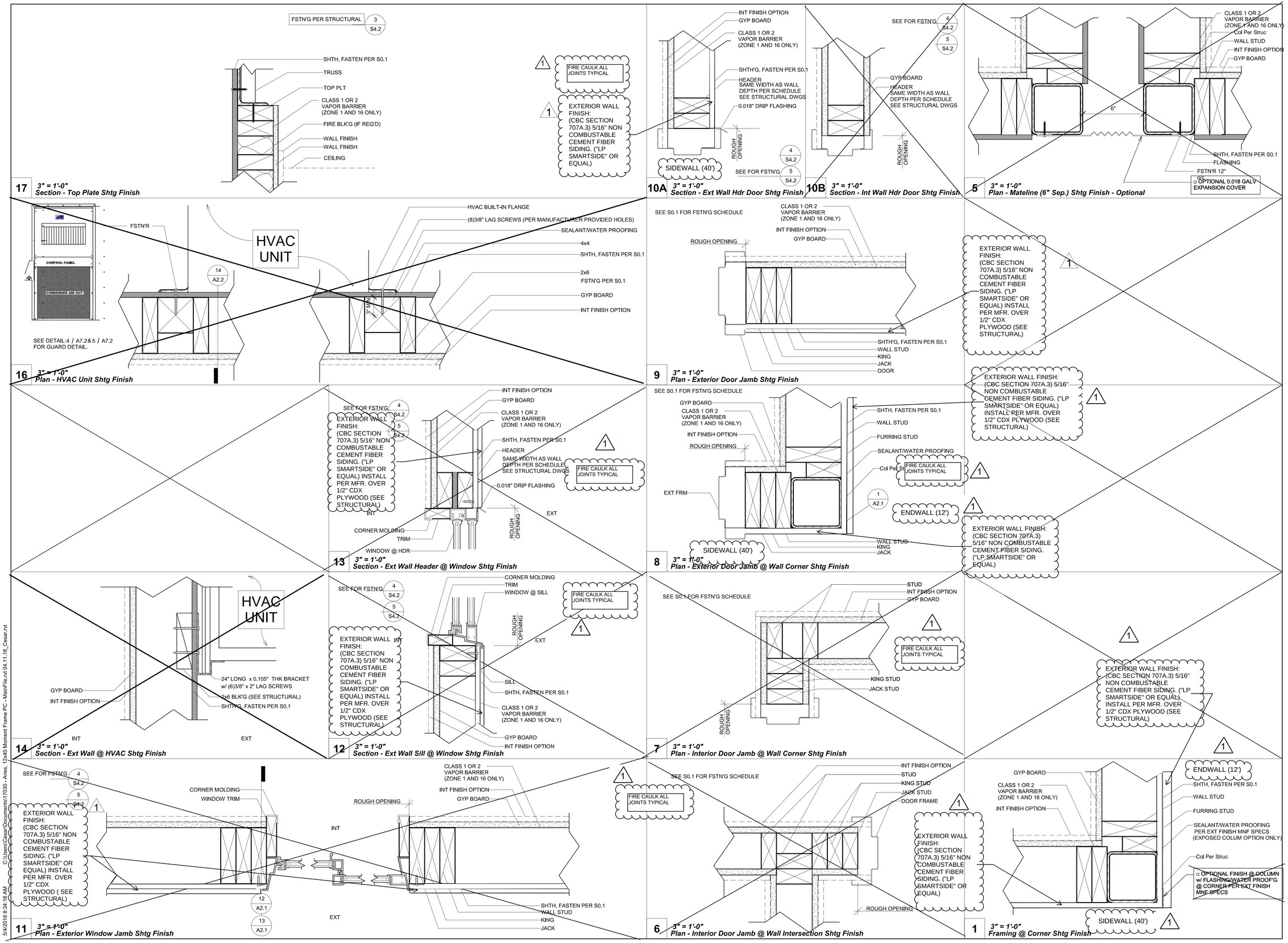

IDENTIFICATION STAMP
DIV. OF THE STATE ARCHITECT
APP: 01-119031 INC:
REVIEWED FOR
SS ☑ FLS ☑ ACS ☑
DATE: 10/22/2020

PROFESSIONAL STAMP

REGISTERED PROFESSIONAL ENGINEER
RAMANY D. RAJAH
No. S3380
STRUCTURAL
STATE OF CALIFORNIA
11.28.2018

THE PLANS, IDEAS & DESIGNS SHOWN ON THESE DRAWINGS ARE THE PROPERTY OF R&S TAVARES ASSOCIATES, INC. DEVISED SOLELY FOR THIS CONTRACT. THESE PLANS SHALL NOT BE USED, IN WHOLE OR IN PART, FOR ANY PURPOSE FOR WHICH THEY WERE NOT INTENDED WITHOUT THE EXPRESS WRITTEN CONSENT OF R&S TAVARES ASSOCIATES, INC. ©

CLIENT

CLASS LEASING LLC
1221 Harley Knox Boulevard
Perris, CA 92571

ORIGINAL PC STATE AGENCY APPROVAL

FILE NUMBER: PC-128
IDENTIFICATION STAMP
DIVISION OF THE STATE ARCHITECT
APP. NO: 04 - 116501 INCR :
AC RM FLS RF SS KR
DATE 2/13/2019

PROJECT TITLE
12' x 40'

PROJECT SPECIFIC STATE AGENCY APPROVAL

Revision Schedule

#	Description	Date
1	ADD WUI SPECIFICATION	

SHEET TITLE
ARCHITECTURAL DETAILS (WOOD FRAMING SHTG FINISH)

PROJECT NUMBER
17030

DRAWN BY
rMc

CHECKED BY
RT

DATE
11.28.2018

SHEET NO.
A2.1

SHEET OF SHEETS

Proprietary Property of Class Leasing
Proprietary Property of Class Leasing
Proprietary Property of Class Leasing

C:\Users\Cesar\Documents\17030 - Aries, 12x40 Moment Frame PC - MainFile.rvt 04.11.18_Cesar.rvt
5/4/2018 8:34:18 AM

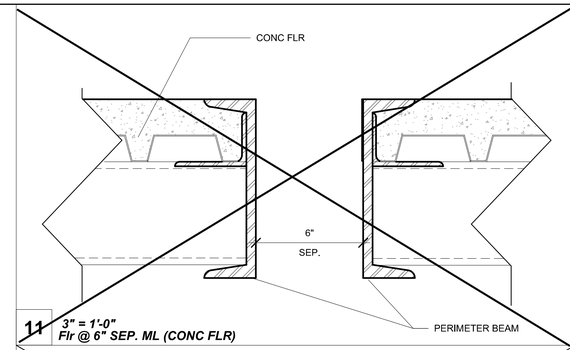

11 *3" = 1'-0"*
Flr @ 6" SEP. ML (CONC FLR)

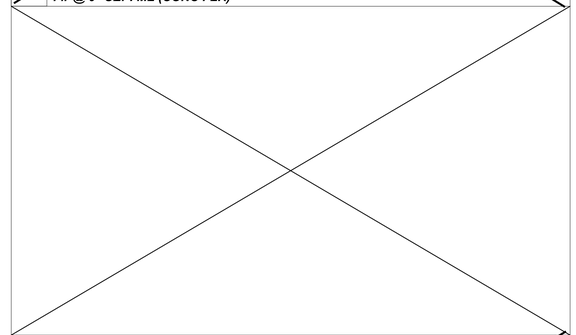

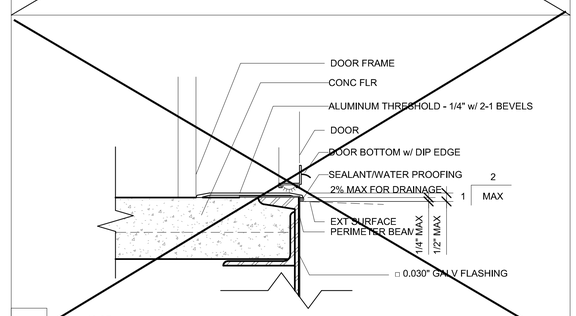

9 *3" = 1'-0"*
Typ Sill Plt @ Threshold (CONC FLR)

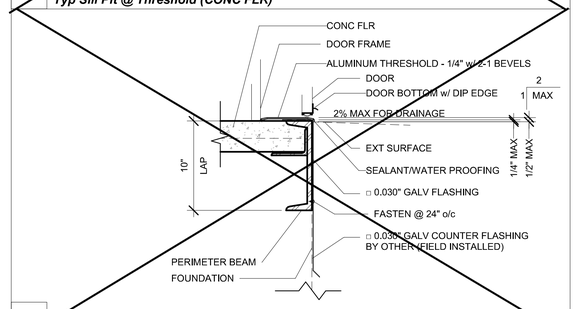

8 *1 1/2" = 1'-0"*
Threshold @ Fnd (CONC FLR)

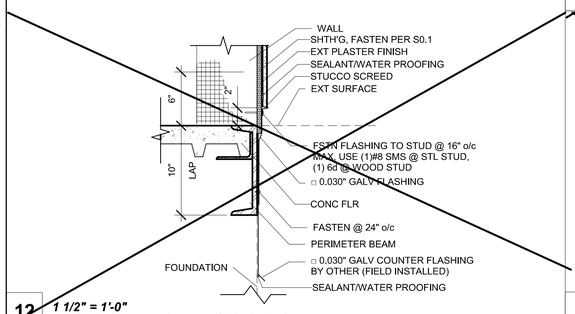

12 *1 1/2" = 1'-0"*
Typ Skirt @ Fnd PLSTR FIN (CONC FLR)

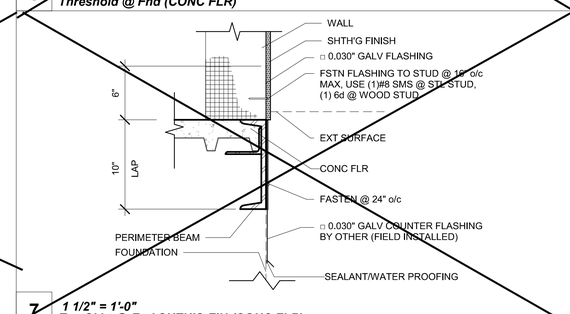

7 *1 1/2" = 1'-0"*
Typ Skirt @ Fnd SHTH'G FIN (CONC FLR)

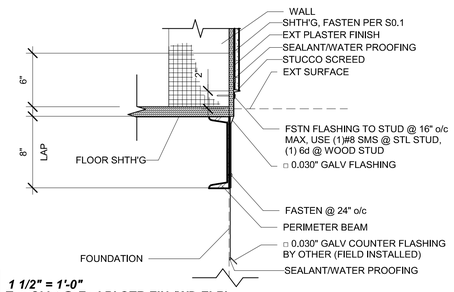

6 *1 1/2" = 1'-0"*
Typ Skirt @ Fnd PLSTR FIN (WD FLR)

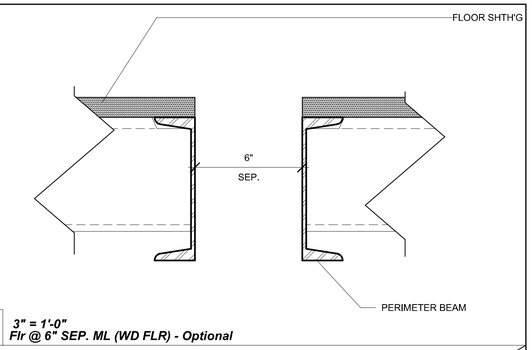

5 *3" = 1'-0"*
Flr @ 6" SEP. ML (WD FLR) - Optional

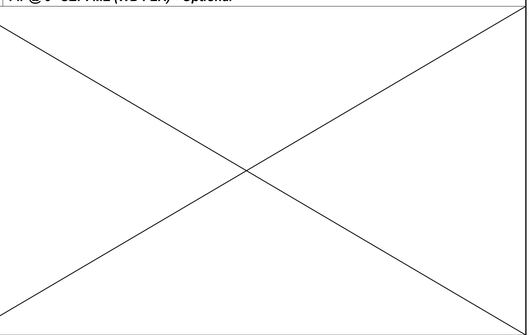

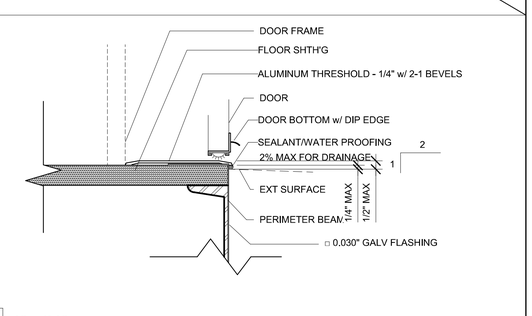

3 *3" = 1'-0"*
Typ Sill Plt @ Threshold (WD FLR)

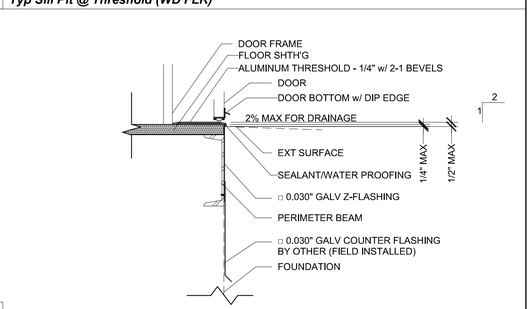

2 *1 1/2" = 1'-0"*
Threshold @ Fnd (WD FLR)

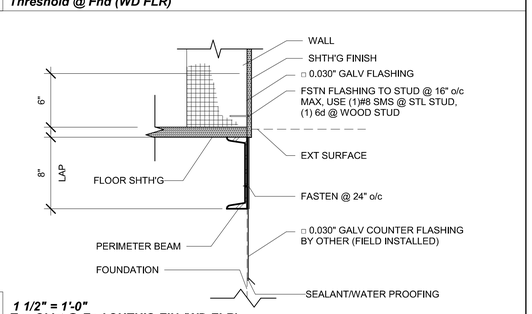

1 *1 1/2" = 1'-0"*
Typ Skirt @ Fnd SHTH'G FIN (WD FLR)

IDENTIFICATION STAMP
DIV. OF THE STATE ARCHITECT
APP: 01-119031 INC:
REVIEWED FOR
SS ☑ FLS ☑ ACS ☑
DATE: 10/22/2020

PROFESSIONAL STAMP

REGISTERED PROFESSIONAL ENGINEER
RAMAY D. RAFAH
No. S3380
STRUCTURAL
STATE OF CALIFORNIA

11.28.2018

THE PLANS, IDEAS & DESIGNS SHOWN ON THESE DRAWINGS ARE THE PROPERTY OF R&S TAVARES ASSOCIATES, INC. DEVISED SOLELY FOR THIS CONTRACT. THESE PLANS SHALL NOT BE USED, IN WHOLE OR IN PART, FOR ANY PURPOSE FOR WHICH THEY WERE NOT INTENDED WITHOUT THE EXPRESS WRITTEN CONSENT OF R&S TAVARES ASSOCIATES, INC. ©

CLIENT

CLASS LEASING LLC
1221 Harley Knox Boulevard
Perris, CA 92571

ORIGINAL PC STATE AGENCY APPROVAL

FILE NUMBER: PC-128
IDENTIFICATION STAMP
DIVISION OF THE STATE ARCHITECT
APP. NO: 04 - 116501 INCR :
AC RM FLS RF SS KR
DATE 2/13/2019

PROJECT TITLE
12' x 40'

PROJECT SPECIFIC STATE AGENCY APPROVAL

Revision Schedule

#	Description	Date

SHEET TITLE
ARCHITECTURAL DETAILS (FLOOR)

PROJECT NUMBER
17030

DRAWN BY
rMc

CHECKED BY
RT

DATE
11.28.2018

SHEET NO.
A2.9

SHEET OF SHEETS

Proprietary Property of Class Leasing
Proprietary Property of Class Leasing
Proprietary Property of Class Leasing

5/4/2018 8:35:07 AM C:\Users\Cesar\Documents\17030 - Aries, 12x40 Moment Frame PC - MainFile.rvt 04.11.18_Cesar.rvt

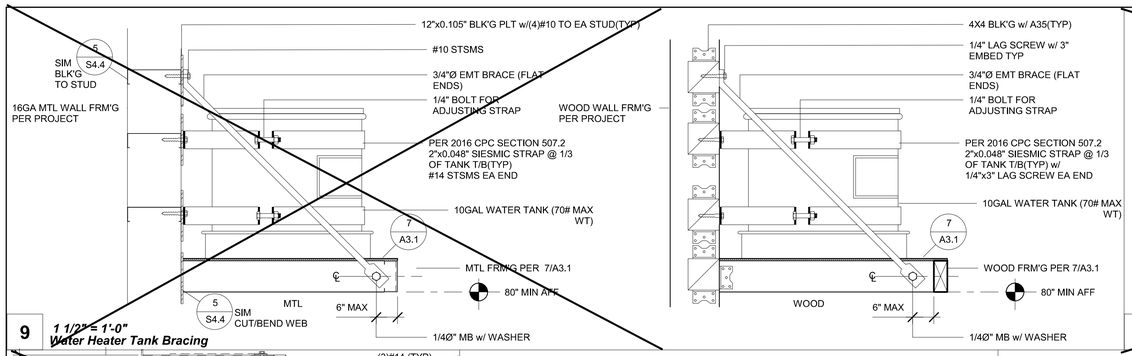

9 *1 1/2" = 1'-0"*
Water Heater Tank Bracing

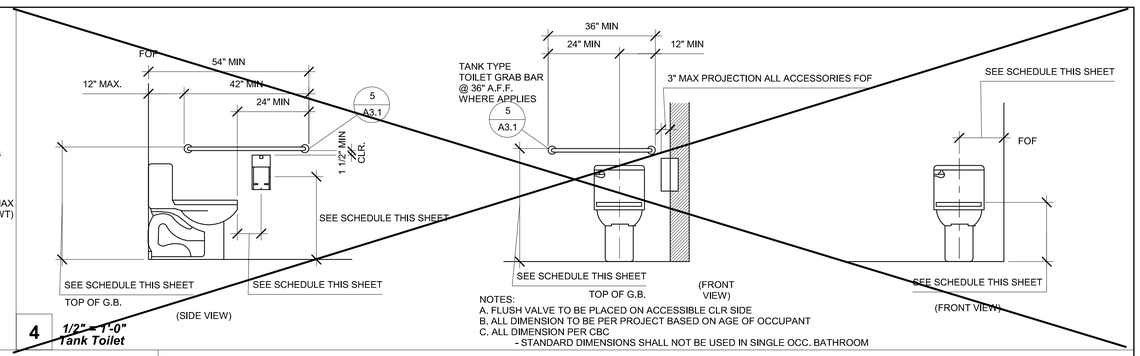

4 *1/2" = 1'-0"*
Tank Toilet

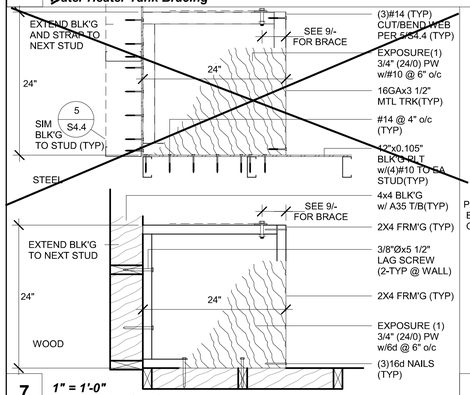

7 *1" = 1'-0"*
Water Heater Shelf Framing

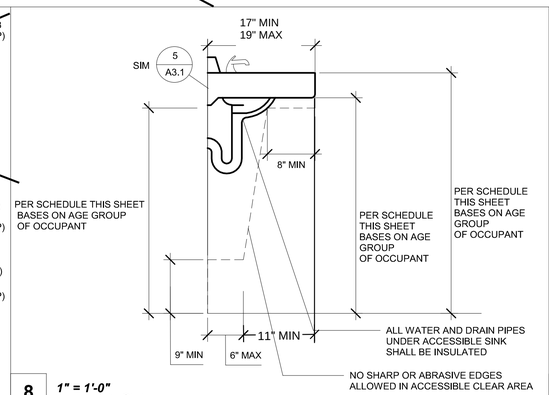

8 *1" = 1'-0"*
Accessible Sink

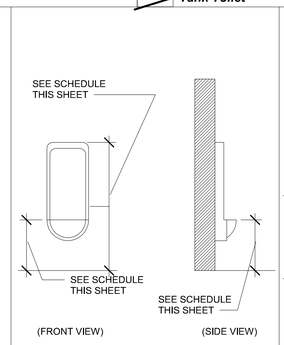

8A *1/2" = 1'-0"*
Wall Mounted Urinal

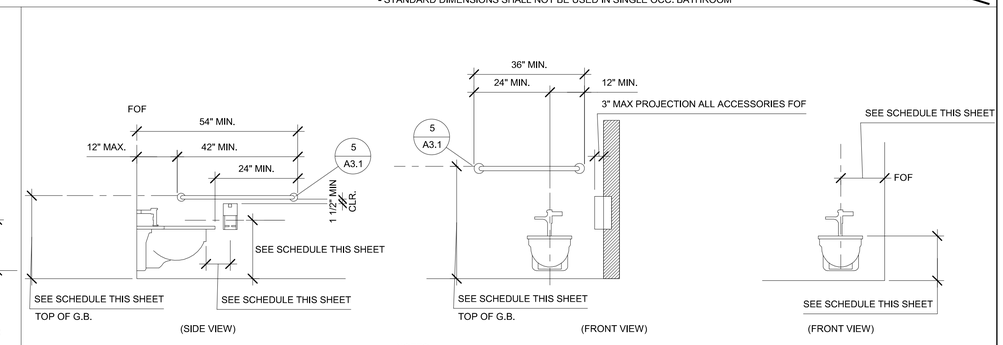

3 *1/2" = 1'-0"*
Wall Mounted Toilet

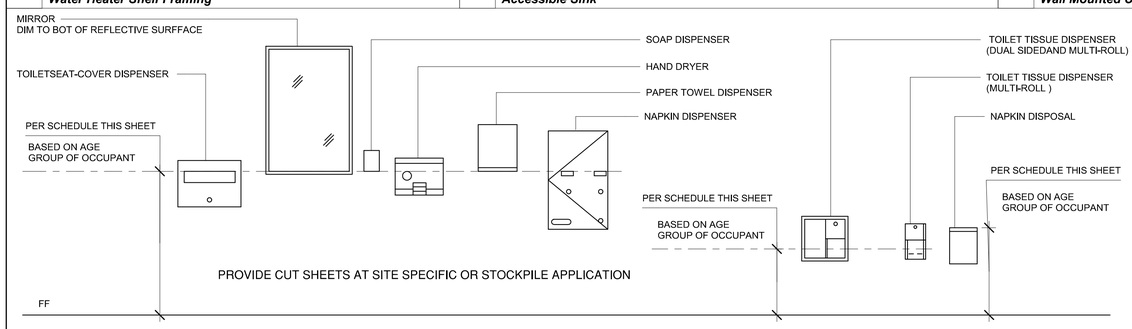

6 *1/2" = 1'-0"*
Mounting Heights

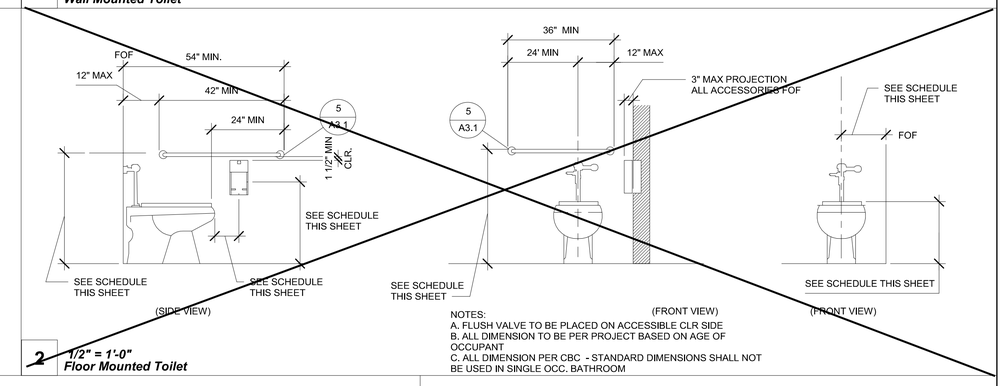

2 *1/2" = 1'-0"*
Floor Mounted Toilet

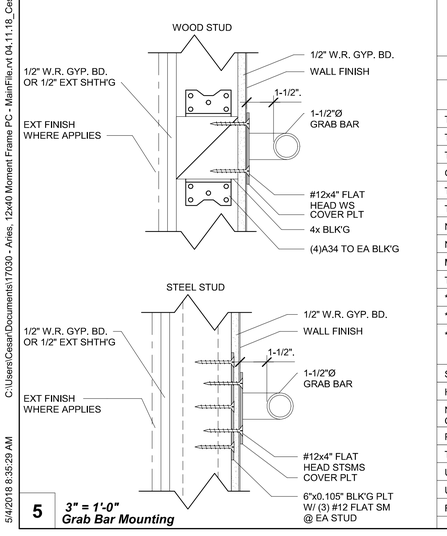

5 *3" = 1'-0"*
Grab Bar Mounting

RECOMMENDED ACCESSIBLE MOUNTING HEIGHT PER CBC TABLE 11B609.4

TYPE	X	□	□	□	□
AGE GROUP	CBC ADULT	AGE 12 AND UP	AGES 9 THROUGH 12	AGES 5 THROUGH 8	AGES 3 AND 4
TOILET CENTERING FROM WALL	17" - 18"	17" - 18"	15" - 18"	12" - 15"	12"
TOILET SEAT HEIGHT	17" - 19"	17" - 19"	15" - 17"	12" - 15"	11" - 12"
TOILET FRONT CLEARANCE	48"	48"	48"	48"	48"
GRAB BAR HEIGHT (TOP OF BAR)	33" - 36"	33" - 36"	25" - 27"	20" - 25"	18" - 20"
TOILET PAPER IN FRONT OF TOILET	7"-9" CL	7" - 9"	7" - 9"	7" - 9"	7" - 9"
TOILET PAPER DISPENSER HEIGHT ~~(CENTER)~~ OUTLET	19" MIN.	19" MIN.	17" - 19"	14" - 17"	14"
NAPKIN DISPOSAL IN FRONT OF TOILET	~~42" MAX.~~	12" MAX.	12" MAX.	N/A	N/A
NAPKIN DISPOSAL HEIGHT (TO TOP)	~~25"-30"~~	25"-30"	25"-30"	N/A	N/A
MIRROR HEIGHT (TO REFLECTIVE SURFACE)	40" MAX.	40" MAX.	40" MAX.	36" MAX.	32" MAX.
TOILET SEAT COVER DISPENSER HEIGHT	40"	40"	40"	36"	32"
*SINK (TOP)- RIM	34" MAX.	34" MAX.	31" MAX.	31" MAX.	31" MAX.
*SINK @ APRON	29" MIN	29" MIN.	24" MIN.	24" MIN.	*19" MIN.
*SINK KNEE CLEARANCE	27" MIN	27" MIN	AGES 6-8,24" MIN AGE 5, PARALLEL APPROACH PERMITTED	24" MIN.	PARALLEL APPROACH PERMITTED
SOAP DISPENSER	40" MAX.	40" MAX.	40" MAX.	36" MAX.	32" MAX.
HAND DRYER (TOP OF CONTROL)	40" MAX.	40" MAX.	40" MAX.	36" MAX.	32" MAX.
NAPKIN DISPENSER HEIGHT (TOP OF CONTROL/ DISPENSER)	40" MAX.	40" MAX.	40" MAX.	N/A	N/A
PAPER TOWEL DISPENSER HEIGHT	40" MAX.	40" MAX.	40" MAX.	36" MAX.	32" MAX.
TOE CLEARANCE @ TOILET PARTITION	9" MIN	12" MIN	12" MIN	12" MIN	12" MIN
URINAL HEIGHT	17" MAX	17" MAX	17" MAX	17" MAX	17" MAX
URINAL PROJECTION	13 1/2" MIN	13 1/2" MIN	13 1/2" MIN	13 1/2" MIN	13 1/2" MIN
FLUSH CONTROL HEIGHT AT URINAL	44" MAX	44" MAX	44" MAX	44" MAX	44" MAX

SEE A7.2 FOR DETAILS

BETWEEN TOILET PAPER HOLDER AND BACKWALL

19" MIN

1 *3/8" = 1'-0"*
Drinking Fountain Blocking Detail steel stud

SEE A7.2 FOR DETAILS

10 *3/8" = 1'-0"*
Drinking Fountain Blocking Detail wood stud

IDENTIFICATION STAMP
DIV. OF THE STATE ARCHITECT
APP: 01-119031 INC:
REVIEWED FOR
SS ☑ FLS ☑ ACS ☑
DATE: 10/22/2020

PROFESSIONAL STAMP

REGISTERED PROFESSIONAL ENGINEER
MARK D. RENTSCH
No. S3380
STRUCTURAL
STATE OF CALIFORNIA
11.28.2018

THE PLANS, IDEAS & DESIGNS SHOWN ON THESE DRAWINGS ARE THE PROPERTY OF R&S TAVARES ASSOCIATES, INC. DEVISED SOLELY FOR THIS CONTRACT. THESE PLANS SHALL NOT BE USED, IN WHOLE OR IN PART, FOR ANY PURPOSE FOR WHICH THEY WERE NOT INTENDED WITHOUT THE EXPRESS WRITTEN CONSENT OF R&S TAVARES ASSOCIATES, INC. ©

CLIENT

CLASS LEASING LLC
1221 Harley Knox Boulevard
Perris, CA 92571

ORIGINAL PC STATE AGENCY APPROVAL

FILE NUMBER: PC-128
IDENTIFICATION STAMP
DIVISION OF THE STATE ARCHITECT
APP. NO: 04 - 116501 INCR :
AC RM FLS RF SS KR
DATE 2/13/2019

PROJECT TITLE
12' x 40'

PROJECT SPECIFIC STATE AGENCY APPROVAL

Revision Schedule

#	Description	Date

SHEET TITLE
ACCESSIBILITY AND MOUNTING HEIGHT DETAILS

PROJECT NUMBER 17030
DRAWN BY rMc
CHECKED BY RT
DATE 11.28.2018
SHEET NO. A3.1
SHEET OF SHEETS

Proprietary Property of Class Leasing

C:\Users\Cesar\Documents\17030 - Aries, 12x40 Moment Frame PC - MainFile.rvt 04.11.18_Cesar.rvt
5/4/2018 8:35:29 AM

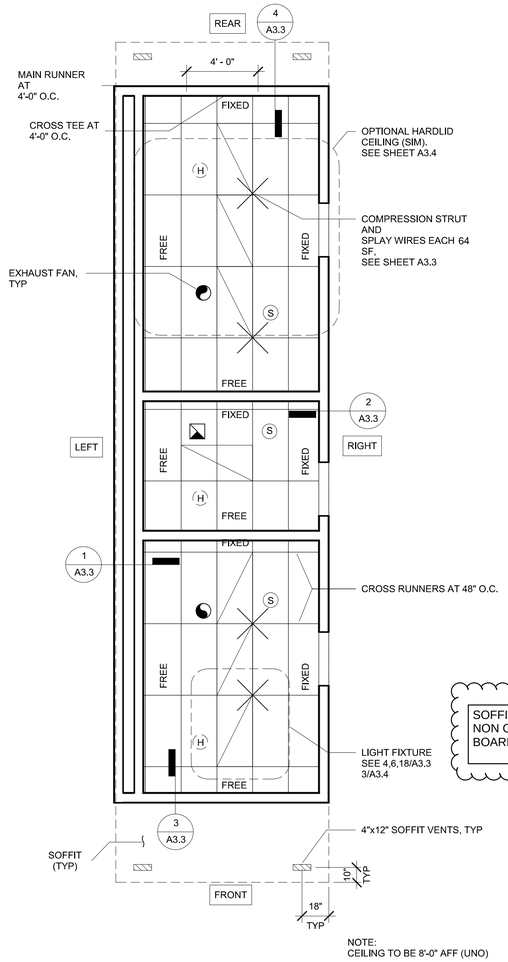

SOFFITS: (C.B.C. SECTION 707A.5) NON COMBUSTABLE CEMENT FIBER BOARD. ("LP SMARTSIDE" OR EQUAL)

1

1 *1/4" = 1'-0"*
12x40 Option 2 (A) Reflected Ceiling Plan

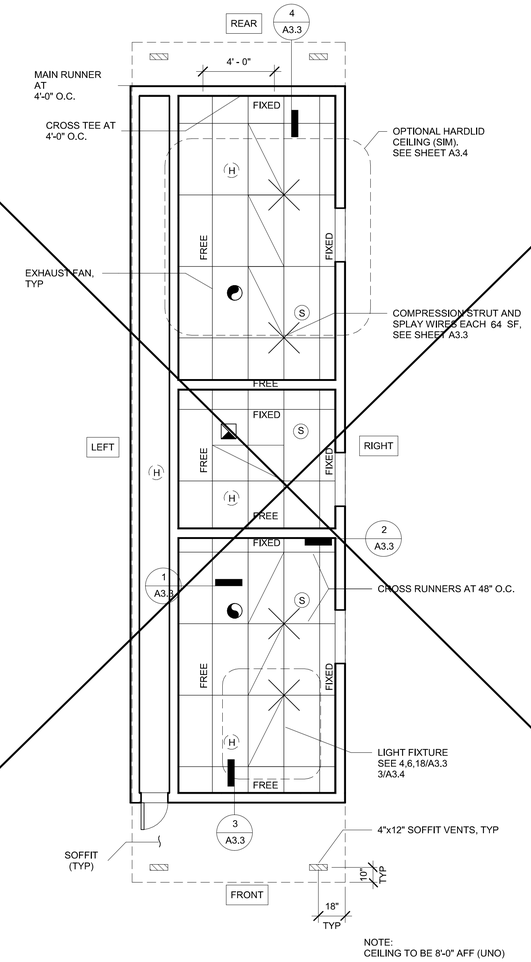

2 *1/4" = 1'-0"*
12x40 Option 2 (B) Reflected Ceiling Plan

ARMSTRONG #:
PA-041

MAIN RUNNER 7301
4' CROSS T #: XL7341
2' CROSS T #: XL7328

STANDARD 7/8" WALL ANGLE CLIP w/ BERC-2 CLIP (ICC #ESR-1308)
2" WALL ANGLE: 7810 (OPTIONAL)

3 *1/4" = 1'-0"*
T-Bar Sched Copy 2

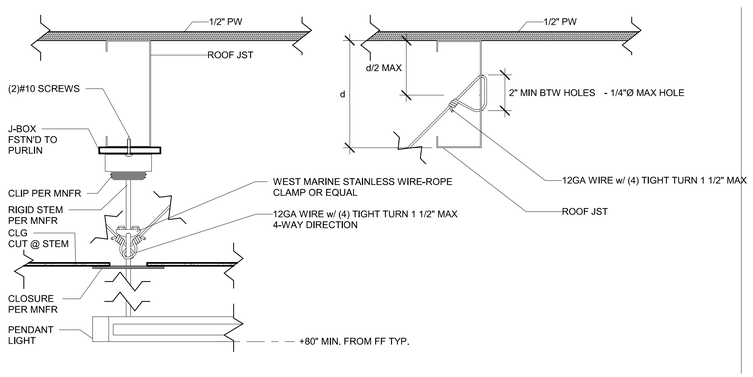

4 *3" = 1'-0"*
Section - Pendant Mounting Detail Copy 1

HVAC REG. (SEE MECH FOR DIFFUSER) LOCATION

4x12 SOFFIT VENTS

RECESSED LIGHT FIXTURE 2'x4'

RECESSED LIGHT FIXTURE 16'x1'

PENDANT LIGHT FIXTURE 8'x1'
6 / A3.2

SITE INSTALLED ML CLG PANEL

SINGLE OCC : (1 LIGHT FIXTURE) = 32 SYSTEM WATTS
(3)32 SYSTEM WATTS X .80 = 25.6
25.6 / 68 S.F. ROOM =

.38 LUMINAIRE WATTS/SF

T-GRID CLG

SKYLIGHT DIFFUSER SEE ROOF PLAN FOR LOCATION

SPLAY WIRE

CLG MOUNTED SMOKE DETECTOR

ATTIC MOUNTED HEAT SENSOR

CLG EXHAUST FAN

5 *1/4" = 1'-0"*
RCP Legend Copy 3

IDENTIFICATION STAMP
DIV. OF THE STATE ARCHITECT
APP: 01-119031 INC:
REVIEWED FOR
SS ☑ FLS ☑ ACS ☑
DATE: 10/22/2020

PROFESSIONAL STAMP

REGISTERED PROFESSIONAL ENGINEER
RAMANY D. RATNER
No. S3380
STRUCTURAL
STATE OF CALIFORNIA

11.28.2018

THE PLANS, IDEAS & DESIGNS SHOWN ON THESE DRAWINGS ARE THE PROPERTY OF R&S TAVARES ASSOCIATES, INC. DEVISED SOLELY FOR THIS CONTRACT. THESE PLANS SHALL NOT BE USED, IN WHOLE OR IN PART, FOR ANY PURPOSE FOR WHICH THEY WERE NOT INTENDED WITHOUT THE EXPRESS WRITTEN CONSENT OF R&S TAVARES ASSOCIATES, INC. ©

CLIENT

CLASS LEASING LLC
1221 Harley Knox Boulevard
Perris, CA 92571

ORIGINAL PC STATE AGENCY APPROVAL

FILE NUMBER: PC-128
IDENTIFICATION STAMP
DIVISION OF THE STATE ARCHITECT
APP. NO: 04 - 116501 INCR :
AC RM FLS RF SS KR
DATE 2/13/2019

PROJECT TITLE
12' x 40'

PROJECT SPECIFIC STATE AGENCY APPROVAL

Revision Schedule

#	Description	Date
1	ADD WUI SPECIFICATION	

SHEET TITLE
RCP OPTION 2 (A) (B)

PROJECT NUMBER
17030

DRAWN BY
rMc

CHECKED BY
RT

DATE
11.28.2018

SHEET NO.
A3.2.1

SHEET OF SHEETS

Proprietary Property of Class Leasing
Proprietary Property of Class Leasing
Proprietary Property of Class Leasing

5/4/2018 8:35:39 AM C:\Users\Cesar\Documents\17030 - Aries, 12x40 Moment Frame PC - MainFile.rvt 04-11.18_Cesar.rvt

1. CEILING SYSTEM GENERAL NOTES:

1.01 Ceiling system components shall comply with ASTM C635-07 and Section 5.1 of ASTM E580-10a.

1.02 The ceiling grid system must be rated heavy duty as defined by ASTM C635-08.

1.03 Ceiling systems. The following ceiling system(s) is/are part of the scope of this project:

Manufacturer's Name ARMSTRONG.
Product Evaluation Report Type and Number ICC # ESR-1308.
Manufacturer's Model Number - main runner XL7341.
Manufacturer's catalog number - cross runner XL7328.

1.04 Seismic Wall Clip: ***[RDP to specify if used]***

Manufacturer's Model BERC-Z.

1.05 Ceiling panels shall not support any light fixtures, air terminals or devices.

1.06 For ceiling installations utilizing acoustical tile panels of mineral or glass fiber, it is not mandatory to provide ¾" clearance between the acoustical tile panels and the wall on the sides of the ceiling which are free to slip. For all other ceiling panel types, provide ¾" clearance between the ceiling panel and the wall on the sides of the ceiling free to slip.

2. MATERIALS:

2.01 Ceiling wire shall be Class 1 zinc coated (galvanized) carbon steel conforming to ASTM A641-09a. Wire shall be #12 gage (0.106" diameter) with soft temper and minimum tensile strength = 70 ksi.

2.02 Galvanized sheet steel (including that used for metal stud and track compression struts/post) shall conform to ASTM A653-11, or other equivalent sheet steel listed in Section A2.1 of the North American Specification for the Design of Cold-Formed Steel Structural Members 2007, including supplement 2 dated 2010 (AISI S100-07/S2-10). Material 43 mil (18 gage) and lighter shall have minimum yield strength of 33 ksi. Material 54 mil (16 gage) and heavier shall have a minimum yield strength of 50 ksi.

2.03 Electrical metallic tube (EMT) shall be ANSI C80.3/UL 797 carbon steel with G90 galvanizing. EMT shall have minimum yield strength (Fy) of 30 ksi and minimum ultimate strength (Fu) of 48 ksi.

Basis Document: **DSA IR 25-2.13** | Sheet No: **1.00**
Sheet Title: **Ceiling Notes** | rev. 09-21-15

3. ATTACHMENT OF HANGER AND BRACING WIRES:

3.01 Separate all ceiling hanger and bracing wires at least six (6) inches from all unbraced ducts, pipes, conduit, etc.

3.02 Hanger and bracing wires shall not attach to or bend around obstructions including but not limited to: piping, ductwork, conduit and equipment.

3.03 Hanger wires that are more than one (horizontal) in six (vertical) out of plumb shall have counter-sloping wires.

3.04 Slack safety wires shall be considered hanger wires for installation and testing requirements.

3.05 Hanger and bracing wire anchorage to the structure shall be installed in such a manner that the direction of the anchorage aligns closely with the direction of the wire. (e.g. bracing wire ceiling clips must be bent as shown in the details and rotated as required to align closely with the direction of the wire, screw eyes in wood must be installed so they align closely with the direction of the wire, etc.)

4. FASTENERS AND WELDING:

4.01 Sheet metal screws shall comply with ASTM C1513-10, ASME B18.6.4-89 (R2005). Penetration of screws through joined material shall not be less than three exposed threads.

4.04 If not otherwise specified in the evaluation report, power-actuated fasteners installed in steel shall be installed so the entire pointed end of the fastener is driven through the steel member.

4.05 Power-actuated fasteners in concrete are not permitted for bracing wires.

4.06 Concrete reinforcement and prestressing tendons shall be located by non-destructive means prior to installing post - installed anchor.

4.07 Welding shall be in accordance with AWS D1.3 using E60XX series electrodes.

5. TESTING: All field testing must be performed in the presence of the project inspector.

5.01 Post-installed anchors in concrete used to support hanger wires shall be tested at a frequency of 10 percent. Power actuated fasteners in concrete shall be field tested for 200 lbs. in tension. All other post-installed anchors in concrete shall be tested in accordance with CBC Section 1913A.7.

5.02 Post-installed anchors in concrete used to attach bracing wires shall be tested at a frequency of 50 percent in accordance with CBC Section 1913A.7.

Basis Document: **DSA IR 25-2.13** | Sheet No: **1.01**
Sheet Title: **Ceiling Notes** | rev. 09-21-15

6. LIGHT FIXTURES:

6.01 All light fixtures shall be positively attached to the ceiling suspension systems by mechanical means to resist a horizontal force equal to the weight of the fixture. A minimum of two screws or approved fasteners are required at each light fixture, per ASTM E580, Section 5.3.1.

6.02 Surface-mounted light fixtures shall be attached to the main runner with at least two positive clamping devices. The clamping device shall completely surround the supporting ceiling runner and be made of steel with a minimum thickness of #14 gage. Rotational spring catches do not comply. A #12 gage slack safety wire shall be connected from each clamping device to the structure above. Provide additional supports when light fixtures are eight (8) feet or longer or exceed 56 lb. Maximum spacing between supports shall not exceed eight (8) feet.

6.03 Light fixtures weighing less than or equal to 10 lb. shall have a minimum of one (1) #12 gage slack safety wire connected from the fixture housing to the structure above.

6.04 Light fixtures weighing less than or equal to 10 lb. shall have a minimum of one (1) #12 gage slack safety wire connected from the fixture housing to the structure above.

6.05 Light fixtures weighing greater than 10 lb. but less than or equal to 56 lbs. may be supported directly on the ceiling runners, but they shall have a minimum of two (2) #12 gage slack safety wires connected from the fixture housing at diagonal corners to the structure above.

Exception: All light fixtures greater than two by four feet weighing less than 56 lbs. shall have a #12 gage slack safety wire at each corner.

6.06 All Light fixtures weighing greater than 56 lb. shall be independently supported by not less than four (4) taut #12 gage hanger wires (one at each corner) attached from the fixture housing to the structure above or other approved hangers. The four (4) taut #12 gage wires or other approved hangers, including their attachment to the structure above, shall be capable of supporting four (4) times the weight of the fixture.

7. SERVICES WITHIN THE CEILING:

7.01 All flexible sprinkler hose fitting mounting brackets, ceiling-mounted air terminals or other services shall be positively attached to the ceiling suspension systems by mechanical means. Screws or approved fasteners are required. A minimum of two attachments are required at each component.

7.02 Ceiling-mounted air terminals or other services weighing less than or equal to 20 lb. shall have one (1) #12 gage slack safety wire attached from the terminal or service to the structure above.

7.03 Flexible sprinkler hose fittings, ceiling-mounted air terminals or other services weighing more than 20 lb. but less than or equal to 56 lb. shall have two (2) #12 gage slack safety wires (at diagonal corners) connected from the terminal or service to the structure above.

7.04 Flexible sprinkler hose fittings, ceiling-mounted air terminals or other services weighing more than 56 lb. shall be supported directly from the structure above by not less than four (4) taut #12 gage hanger wires attached from the terminal or service to the structure above or other approved hangers.

Basis Document: **DSA IR 25-2.13** | Sheet No: **1.02**
Sheet Title: **Ceiling Notes** | rev. 09-21-15

8. OTHER DEVICES WITHIN THE CEILING:

8.01 All lightweight miscellaneous devices, such as strobe lights, occupancy sensors, speakers, exit signs, etc., shall be attached to the ceiling grid. In addition, devices weighing more than 10 lbs. shall have a #12 gage slack safety wire anchored to the structure above. Devices weighing more than 20 lbs. shall be supported independently from the structure above.

Basis Document: **DSA IR 25-2.13** | Sheet No: **1.03**
Sheet Title: **Ceiling Notes** | rev. 09-21-15

1 *12" = 1'-0"*
CEILING NOTES

IDENTIFICATION STAMP
DIV. OF THE STATE ARCHITECT
APP: 01-119031 INC:
REVIEWED FOR
SS ☑ FLS ☑ ACS ☑
DATE: 10/22/2020

PROFESSIONAL STAMP
REGISTERED PROFESSIONAL ENGINEER
MANNY D. FRISCH
No. S3380
STRUCTURAL
STATE OF CALIFORNIA
11.28.2018

THE PLANS, IDEAS & DESIGNS SHOWN ON THESE DRAWINGS ARE THE PROPERTY OF R&S TAVARES ASSOCIATES, INC. DEVISED SOLELY FOR THIS CONTRACT. THESE PLANS SHALL NOT BE USED, IN WHOLE OR IN PART, FOR ANY PURPOSE FOR WHICH THEY WERE NOT INTENDED WITHOUT THE EXPRESS WRITTEN CONSENT OF R&S TAVARES ASSOCIATES, INC. ©

CLIENT
CLASS LEASING LLC
1221 Harley Knox Boulevard
Perris, CA 92571

ORIGINAL PC STATE AGENCY APPROVAL
FILE NUMBER: PC-128
IDENTIFICATION STAMP
DIVISION OF THE STATE ARCHITECT
APP. NO: 04 - 116501 INCR :
AC RM FLS RF SS KR
DATE 2/13/2019

PROJECT TITLE
12' x 40'

PROJECT SPECIFIC STATE AGENCY APPROVAL

Revision Schedule

#	Description	Date

SHEET TITLE
CEILING NOTES

PROJECT NUMBER
17030

DRAWN BY
rMc

CHECKED BY
C RT er

DATE
11.28.2018

SHEET NO.
A3.2.4

SHEET OF SHEETS

Proprietary Property of Class Leasing
Proprietary Property of Class Leasing
Proprietary Property of Class Leasing

C:\Users\Cesar\Documents\17030 - Aries, 12x40 Moment Frame PC - MainFile.rvt 04.11.18_Cesar.rvt
5/4/2018 8:35:53 AM

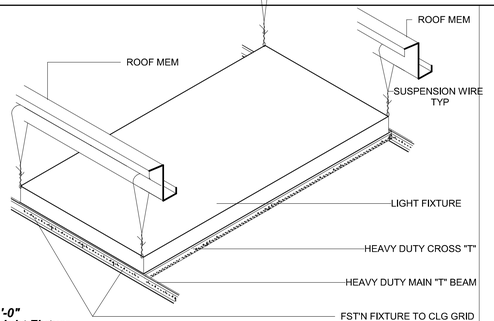

18 *1" = 1'-0"*
ISO - Light Fixture

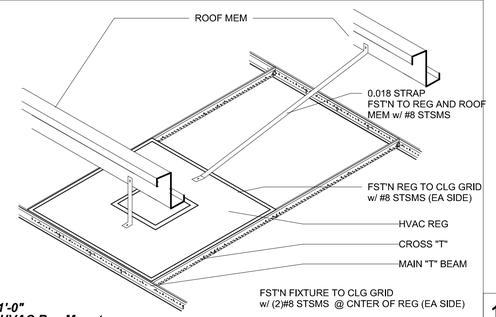

17 *1" = 1'-0"*
ISO - HVAC Reg Mount

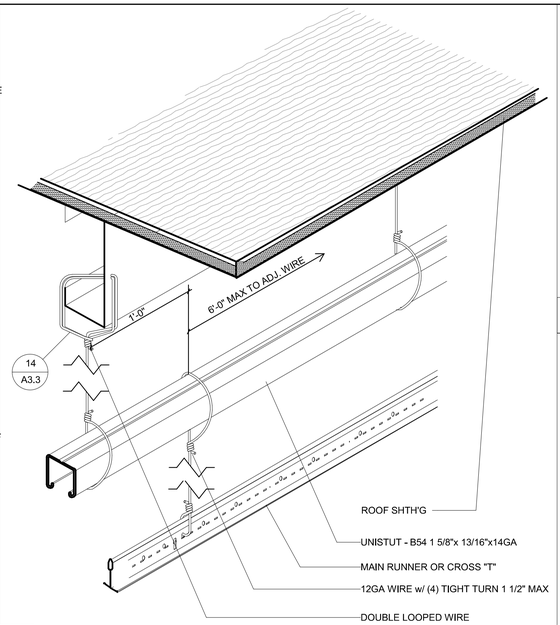

12 *3" = 1'-0"*
ISO - Trapeze Condition

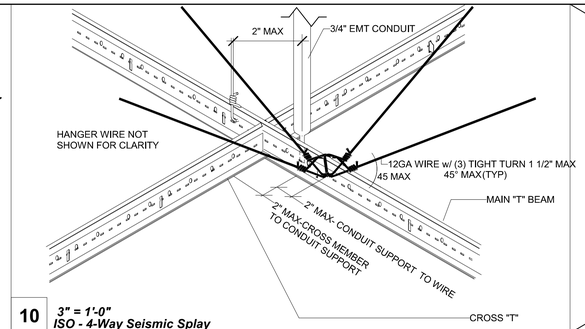

10 *3" = 1'-0"*
ISO - 4-Way Seismic Splay

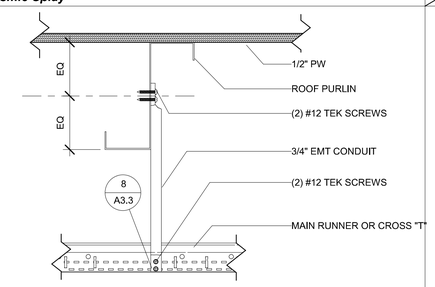

9 *3" = 1'-0"*
Elevation - Compression Strut

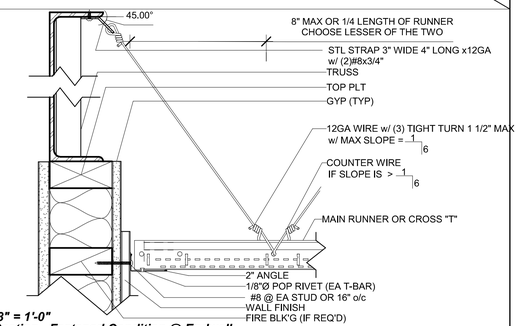

4 *3" = 1'-0"*
Section - Fastened Condition @ Endwall

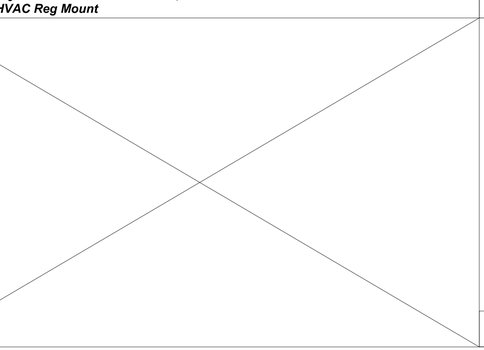

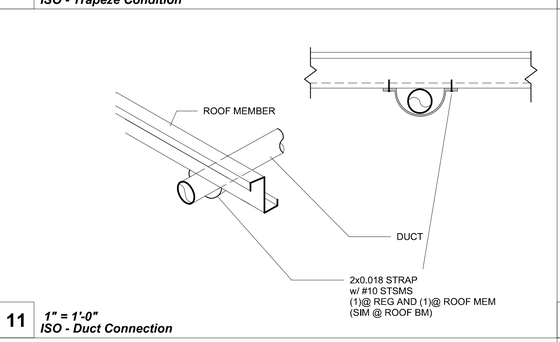

11 *1" = 1'-0"*
ISO - Duct Connection

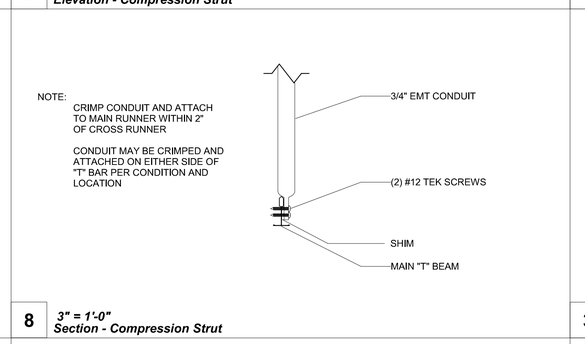

8 *3" = 1'-0"*
Section - Compression Strut

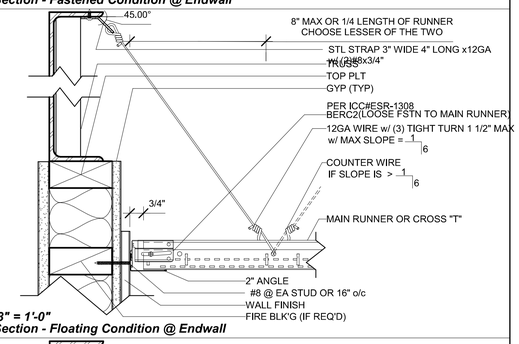

3 *3" = 1'-0"*
Section - Floating Condition @ Endwall

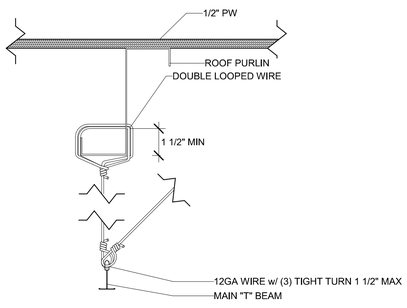

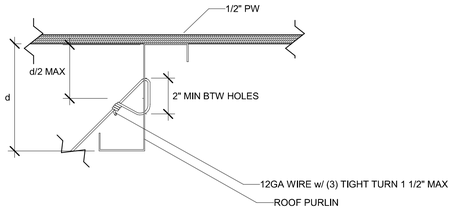

15 *3" = 1'-0"*
Section - Brace Wire Detail

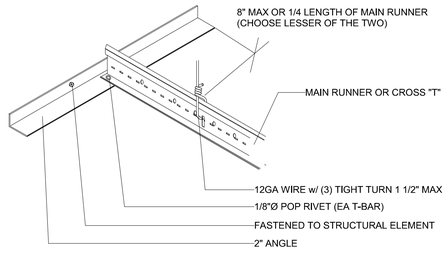

7 *3" = 1'-0"*
Fixed Condition w/ 2" Angle

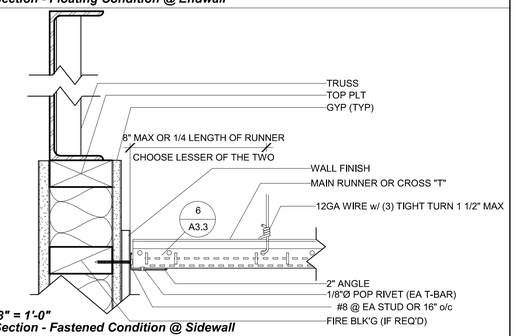

2 *3" = 1'-0"*
Section - Fastened Condition @ Sidewall

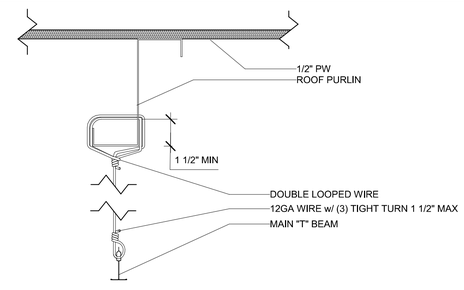

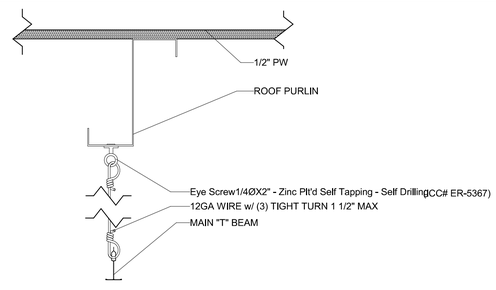

14 *3" = 1'-0"*
Section - Hanger Wire Detail

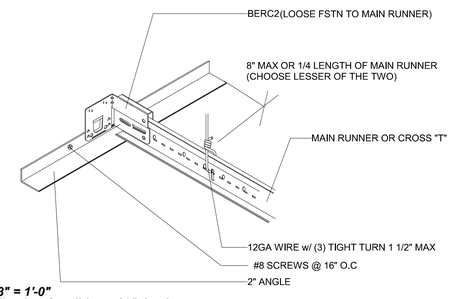

6 *3" = 1'-0"*
Floating Condition w/ 2" Angle

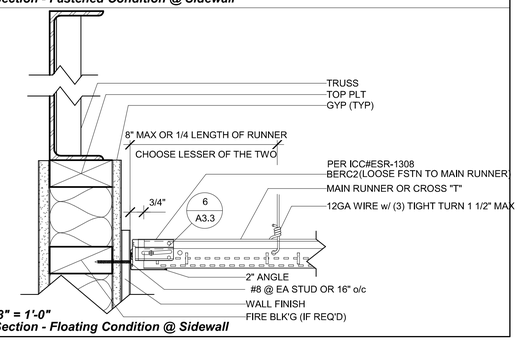

1 *3" = 1'-0"*
Section - Floating Condition @ Sidewall

IDENTIFICATION STAMP
DIV. OF THE STATE ARCHITECT
APP: 01-119031 INC:
REVIEWED FOR
SS ☑ FLS ☑ ACS ☑
DATE: 10/22/2020

PROFESSIONAL STAMP

REGISTERED PROFESSIONAL ENGINEER
RICHARD A. D. TAVARES
No. S3380
STRUCTURAL
STATE OF CALIFORNIA
11.28.2018

THE PLANS, IDEAS & DESIGNS SHOWN ON THESE DRAWINGS ARE THE PROPERTY OF R&S TAVARES ASSOCIATES, INC. DEVISED SOLELY FOR THIS CONTRACT. THESE PLANS SHALL NOT BE USED, IN WHOLE OR IN PART, FOR ANY PURPOSE FOR WHICH THEY WERE NOT INTENDED WITHOUT THE EXPRESS WRITTEN CONSENT OF R&S TAVARES ASSOCIATES, INC. ©

CLIENT

CLASS LEASING LLC
1221 Harley Knox Boulevard
Perris, CA 92571

ORIGINAL PC STATE AGENCY APPROVAL

FILE NUMBER: PC-128
IDENTIFICATION STAMP
DIVISION OF THE STATE ARCHITECT
APP. NO: 04 - 116501 INCR :
AC RM FLS RF SS KR
DATE 2/13/2019

PROJECT TITLE
12' x 40'

PROJECT SPECIFIC STATE AGENCY APPROVAL

Revision Schedule

#	Description	Date

SHEET TITLE
CEILING DETAILS (T-GRID)

PROJECT NUMBER
17030

DRAWN BY
rMc

CHECKED BY
RT

DATE
11.28.2018

SHEET NO.
A3.3

SHEET OF SHEETS

Proprietary Property of Class Leasing
Proprietary Property of Class Leasing
Proprietary Property of Class Leasing

C:\Users\Cesar\Documents\17030 - Aries, 12x40 Moment Frame PC - MainFile.rvt 04.11.18_Cesar.rvt
5/4/2018 8:36:02 AM

GENERAL NOTES:

A - IF REQ: 15% OF ROOF SURFACE AREA (EXCLUDING ANY SKYLIGHT AREA) TO BE RESERVED FOR SOLAR PANEL APPLICATION OR SOLAR READY WILL BE SUPPLIED FROM A BUILDING OR STRUCTURE WITHIN 250 FT OF PC BUILDING.

B - ENTIRE ROOF SURFACE IS DESIGNED STRUCTURALLY TO ACCOMMODATE SOLAR PANELS = 3PSF

C - SEE ELECTRICAL GENERAL NOTES SHEET FOR SOLAR ZONE AREAS MANDATORY REQUIREMENTS, REFERED TO SECTION 110.10

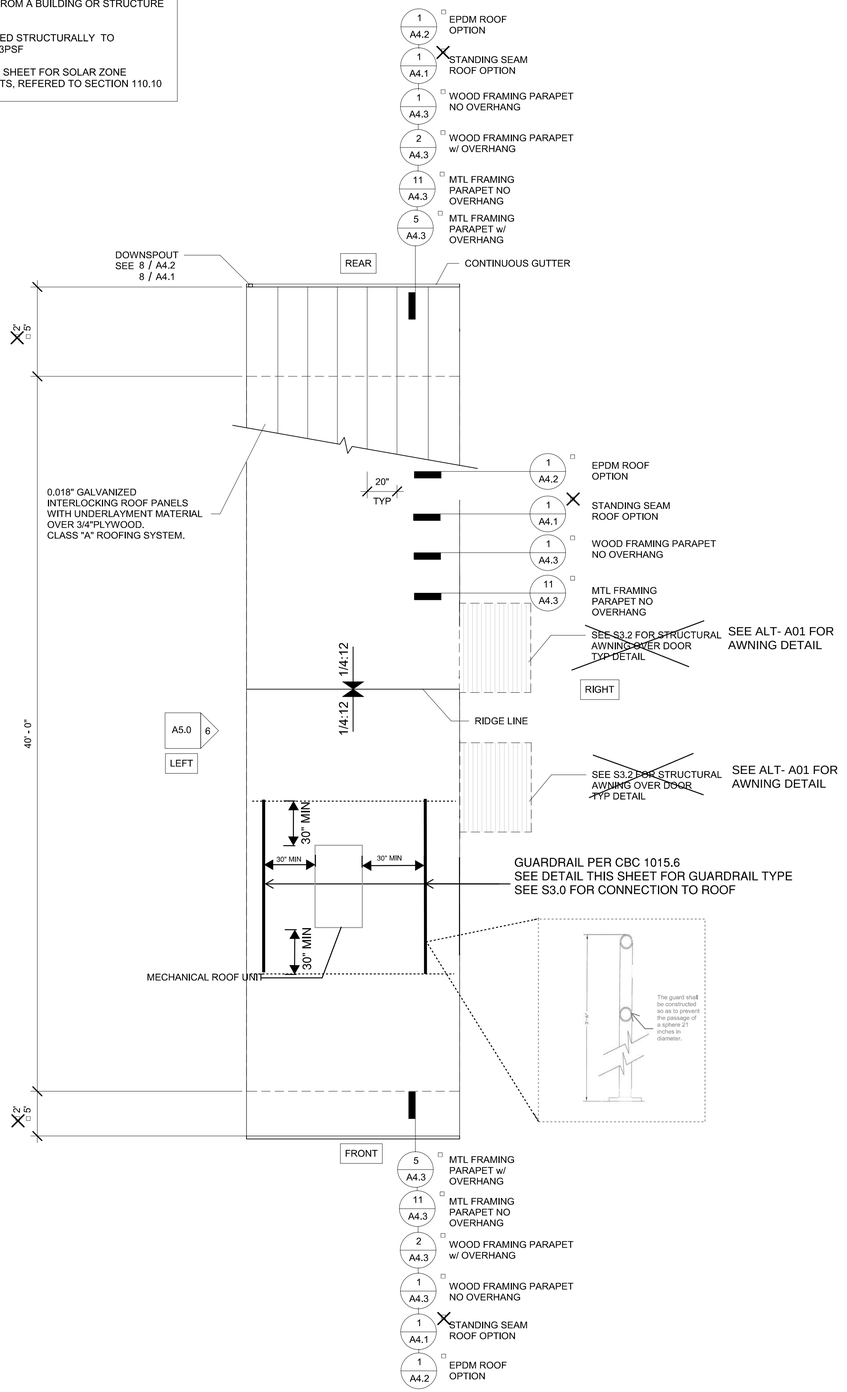

2 1/4" = 1'-0"
12x40 Roof Plan Dual Slope

GENERAL NOTES:

A - IF REQ: 15% OF ROOF SURFACE AREA (EXCLUDING ANY SKYLIGHT AREA) TO BE RESERVED FOR SOLAR PANEL APPLICATION OR SOLAR READY WILL BE SUPPLIED FROM A BUILDING OR STRUCTURE WITHIN 250 FT OF PC BUILDING.

B - ENTIRE ROOF SURFACE IS DESIGNED STRUCTURALLY TO ACCOMMODATE SOLAR PANELS = 3PSF

C - SEE ELECTRICAL GENERAL NOTES SHEET FOR SOLAR ZONE AREAS MANDATORY REQUIREMENTS, REFERED TO SECTION 110.10

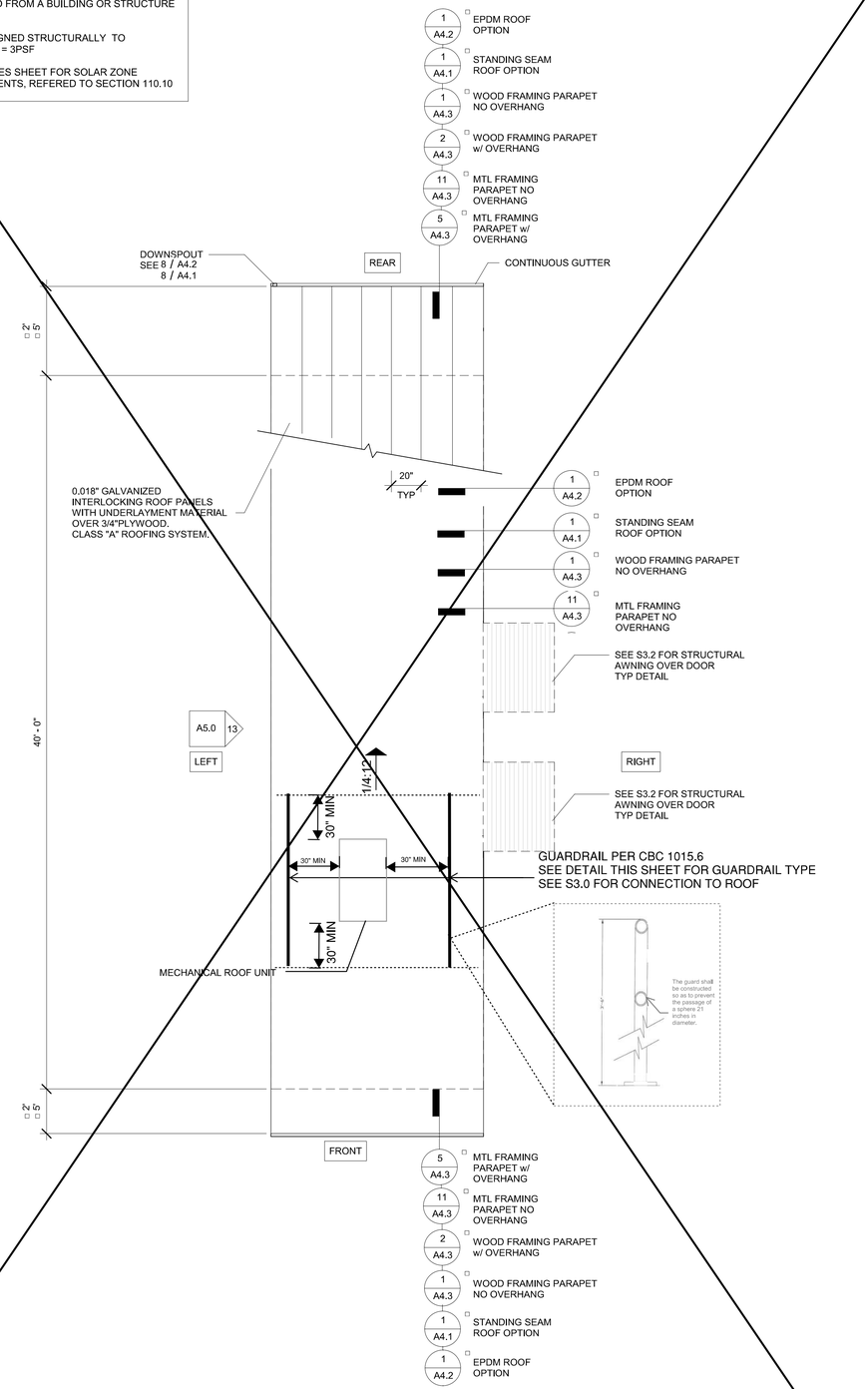

1 1/4" = 1'-0"
12x40 Roof Plan Mono Slope

IDENTIFICATION STAMP
DIV. OF THE STATE ARCHITECT
APP: 01-119031 INC:
REVIEWED FOR
SS ☑ FLS ☑ ACS ☑
DATE: 10/22/2020

PROFESSIONAL STAMP

REGISTERED PROFESSIONAL ENGINEER
JIMMY D. FRENCH
No. S3380
STRUCTURAL
STATE OF CALIFORNIA

11.28.2018

THE PLANS, IDEAS & DESIGNS SHOWN ON THESE DRAWINGS ARE THE PROPERTY OF R&S TAVARES ASSOCIATES, INC. DEVISED SOLELY FOR THIS CONTRACT. THESE PLANS SHALL NOT BE USED, IN WHOLE OR IN PART, FOR ANY PURPOSE FOR WHICH THEY WERE NOT INTENDED WITHOUT THE EXPRESS WRITTEN CONSENT OF R&S TAVARES ASSOCIATES, INC. ©

CLIENT

CLASS LEASING LLC
1221 Harley Knox Boulevard
Perris, CA 92571

ORIGINAL PC STATE AGENCY APPROVAL

FILE NUMBER: PC-128
IDENTIFICATION STAMP
DIVISION OF THE STATE ARCHITECT
APP. NO: 04 - 116501 INCR :
AC RM FLS RF SS KR
DATE 2/13/2019

PROJECT TITLE
12' x 40'

PROJECT SPECIFIC STATE AGENCY APPROVAL

Revision Schedule

#	Description	Date

SHEET TITLE
ROOF PLAN MONO AND DUAL SLOPE

PROJECT NUMBER
17030

DRAWN BY
rMc

CHECKED BY
RT

DATE
11.28.2018

SHEET NO.
A4.0

SHEET OF SHEETS

Proprietary Property of Class Leasing
Proprietary Property of Class Leasing
Proprietary Property of Class Leasing

5/4/2018 8:36:11 AM C:\Users\Cesar\Documents\17030 - Aries, 12x40 Moment Frame PC - MainFile.rvt 04.11.18_Cesar.rvt

Metal Inside Closure

DESCRIPTION						PRICED PER EACH
PART #	SSR SYSTEM	WIDTH	GAUGE	FINISH	WEIGHT EACH	PRICE
HW-426	UD & DL	3/4"	18	Galvalume®	.22#	✓

Clip - 2" Sliding (Low)

Note:
- Specify SSR System
- Clip fasteners must be ordered separately.
- 1 3/4" movement in each direction

DESCRIPTION				PRICED PER EACH
PART #	SSR SYSTEM	HEIGHT	WEIGHT EACH	PRICE
HW-2102	Ultra-Dek®	3 3/4"	.50#	✓
HW-2122	Double-Lok®	3 3/4"	.50#	✓

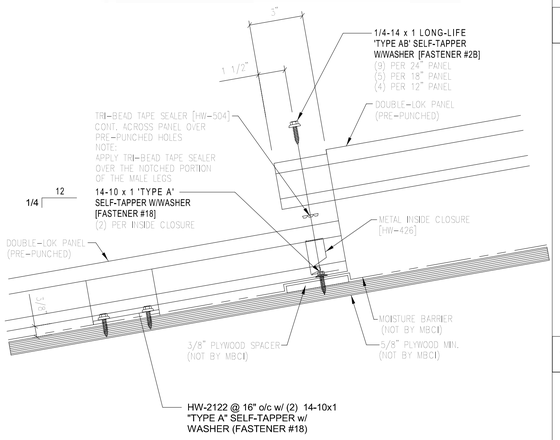

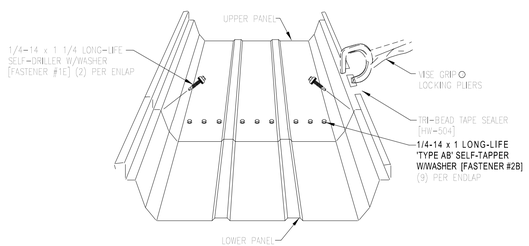

PANEL INSTALLATION SEQUENCE

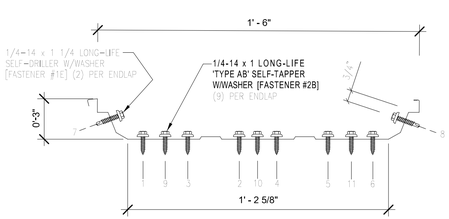

FASTENER SEQUENCE @ ENDLAP

18" DOUBLE-LOK 22GA STANDING SEAM PANEL BY MBCI			
	NEG		POS
t	= 0.0299"	t	= 0.0299"
S_x	= 0.1846 IN^3	S_x	= 0.2154 IN^3
I_x	= 0.2718 IN^4	I_x	= 0.4968 IN^4
F_y	= 50 KSI	F_y	= 50 KSI

18" 26GA STANDING SEAM PANEL			
	NEG		POS
t	= 0.018"	t	= 0.018"
S_x	= 0.1383 IN^3	S_x	= 0.7560 IN^3
I_x	= 0.351 IN^4	I_x	= 0.351 IN^4
F_y	= 33 KSI	F_y	= 33 KSI

13 *3" = 1'-0"*
Standing Seam

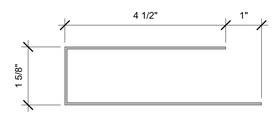

12 *6" = 1'-0"*
FLASHING @ ROOF HIGH SIDE

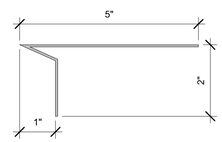

11 *6" = 1'-0"*
FLASHING @ ROOF LOW SIDE

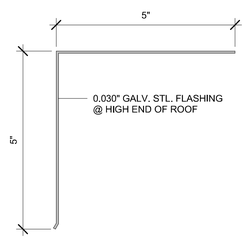

9 *6" = 1'-0"*
ROOF FLASHING

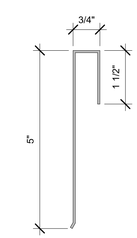

7 *6" = 1'-0"*
ROOF FLASHING @ SIDEWALL

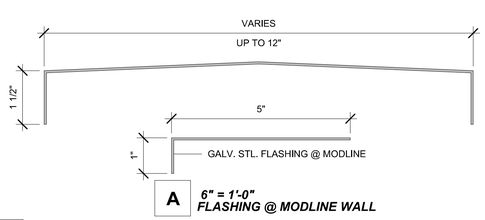

A *6" = 1'-0"*
FLASHING @ MODLINE WALL

10 *6" = 1'-0"*
ROOF CAP @ MODLINE

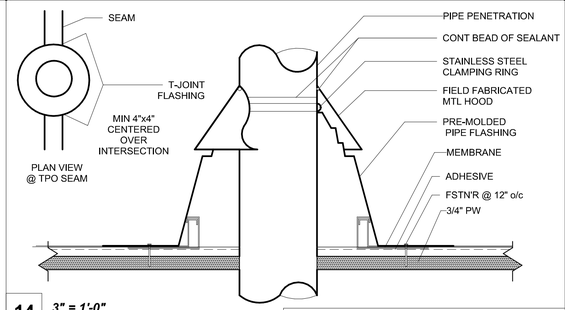

14 *3" = 1'-0"*
Pipe Penetration Standing Seam

ALL FSTN'G & WATER PROOF'G/FLASHING PER MNFR SPECS

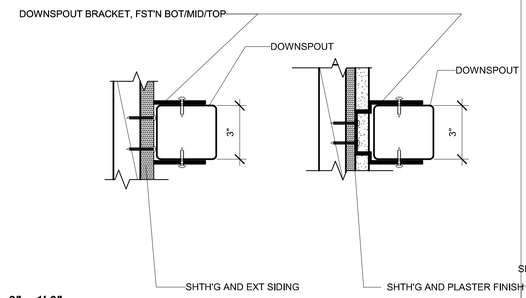

8 *3" = 1'-0"*
Downspout Mount1

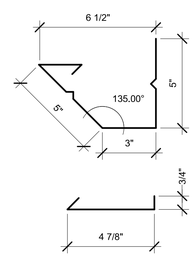

ROOF GUTTERS: (CBC SECTION 705.4) SHALL BE SCREENED WITH A CORROSION RESTISTANT NONCOMBUSTIBLE WIRE MESH WITH 1/4" (6MM) OPENINGS OR EQUAL

6 *3" = 1'-0"*
Gutter and Strap1

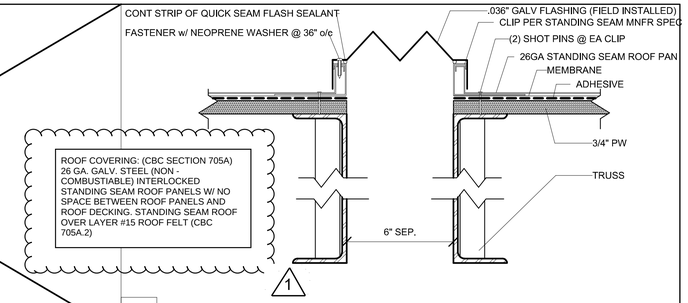

5 *3" = 1'-0"*
Roof Std'g Seam w/ 6" Sep

ALL FSTN'G & WATER PROOF'G/FLASHING PER MNFR SPECS

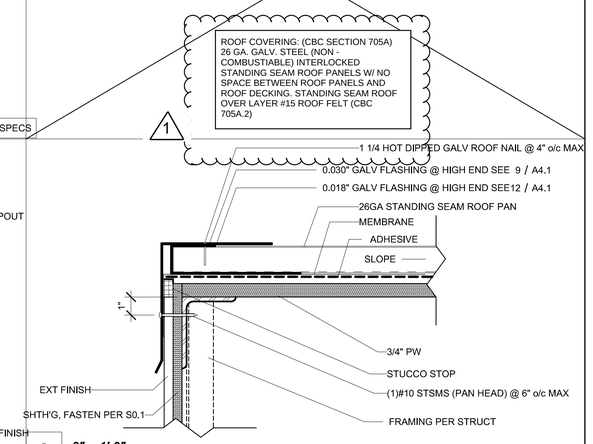

3 *3" = 1'-0"*
Roof @ Endwall Std'g Seam (High End)

ALL FSTN'G & WATER PROOF'G/FLASHING PER MNFR SPECS

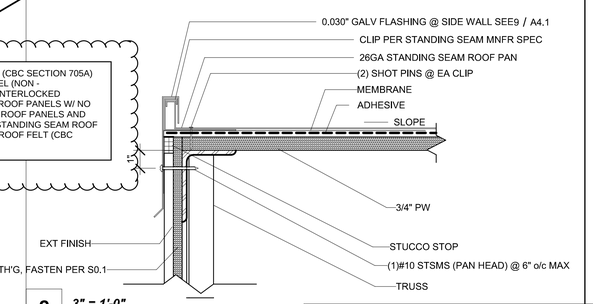

2 *3" = 1'-0"*
Roof @ Standing Seam Sidwall

ALL FSTN'G & WATER PROOF'G/FLASHING PER MNFR SPECS

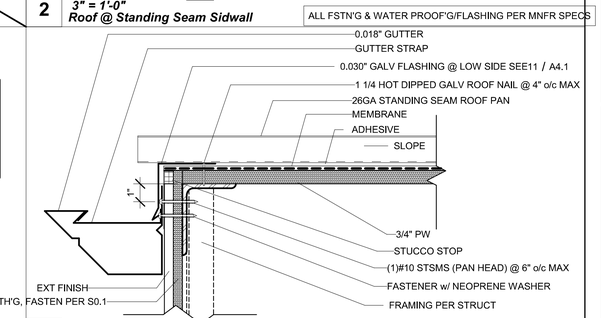

1 *3" = 1'-0"*
Roof @ Endwall Std'g Seam (Low End)

ALL FSTN'G & WATER PROOF'G/FLASHING PER MNFR SPECS

IDENTIFICATION STAMP
DIV. OF THE STATE ARCHITECT
APP: 01-119031 INC:
REVIEWED FOR
SS ☑ FLS ☑ ACS ☑
DATE: 10/22/2020

PROFESSIONAL STAMP

REGISTERED PROFESSIONAL ENGINEER — DANNY D. RAHI — No. S3380 — STRUCTURAL — STATE OF CALIFORNIA

11.28.2018

THE PLANS, IDEAS & DESIGNS SHOWN ON THESE DRAWINGS ARE THE PROPERTY OF R&S TAVARES ASSOCIATES, INC. DEVISED SOLELY FOR THIS CONTRACT. THESE PLANS SHALL NOT BE USED, IN WHOLE OR IN PART, FOR ANY PURPOSE FOR WHICH THEY WERE NOT INTENDED WITHOUT THE EXPRESS WRITTEN CONSENT OF R&S TAVARES ASSOCIATES, INC. ©

CLIENT

CLASS LEASING LLC
1221 Harley Knox Boulevard
Perris, CA 92571

ORIGINAL PC STATE AGENCY APPROVAL

FILE NUMBER: PC-128
IDENTIFICATION STAMP
DIVISION OF THE STATE ARCHITECT
APP. NO: 04 - 116501 INCR :
AC RM FLS RF SS KR
DATE 2/13/2019

PROJECT TITLE
12' x 40'

PROJECT SPECIFIC STATE AGENCY APPROVAL

Revision Schedule

#	Description	Date
1	ADD WUI SPECIFICATION	

SHEET TITLE
ROOF DETAILS (STANDING SEAM)

PROJECT NUMBER
17030

DRAWN BY
rMc

CHECKED BY
RT

DATE
11.28.2018

SHEET NO.
A4.1

SHEET OF SHEETS

Proprietary Property of Class Leasing
Proprietary Property of Class Leasing
Proprietary Property of Class Leasing

5/4/2018 8:36:17 AM C:\Users\Cesar\Documents\17030 - Aries, 12x40 Moment Frame PC - MainFile.rvt 04.11.18_Cesar.rvt

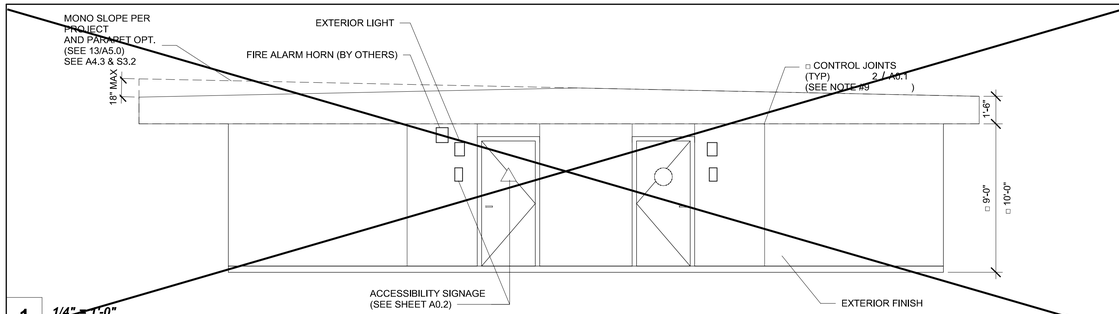

1 1/4" = 1'-0"
Right Elevation Option 1 (A) and (B)

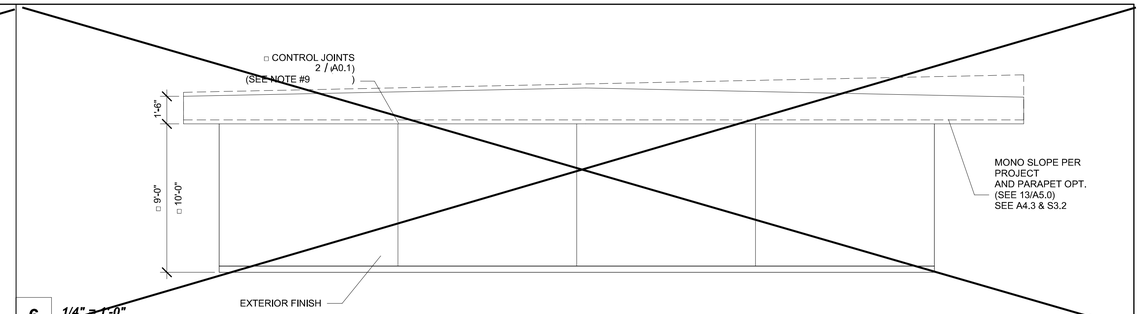

6 1/4" = 1'-0"
Left TYP Elevation

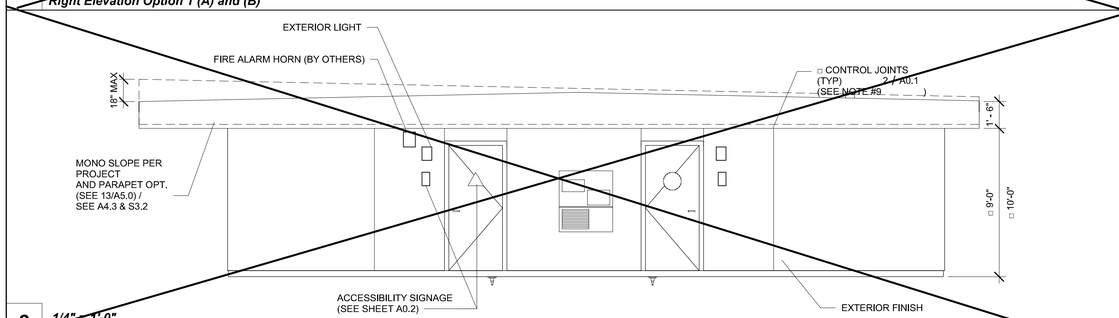

2 1/4" = 1'-0"
Right Elevation Option 1 (C)

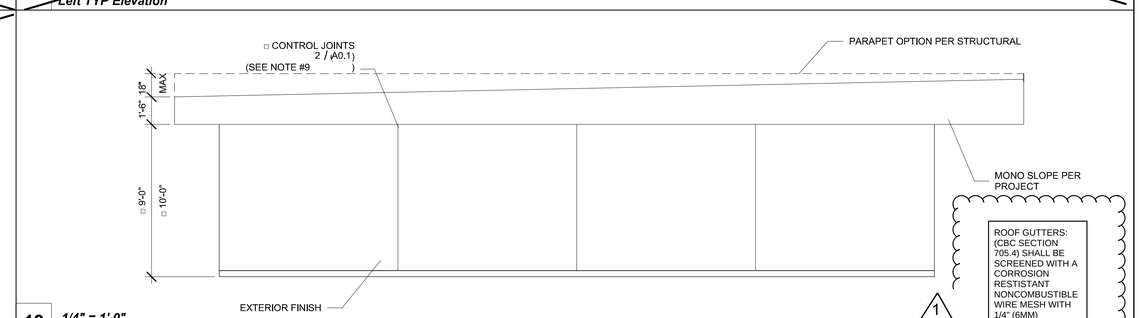

13 1/4" = 1'-0"
Left TYP Elevation Mono Slope

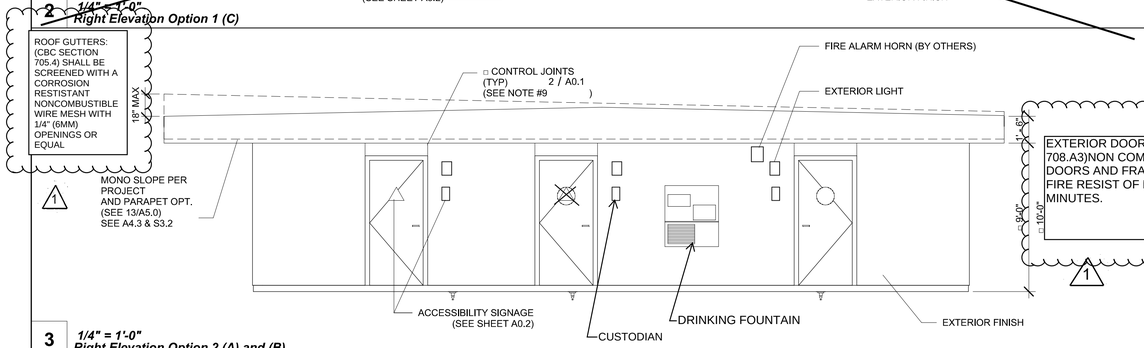

3 1/4" = 1'-0"
Right Elevation Option 2 (A) and (B)

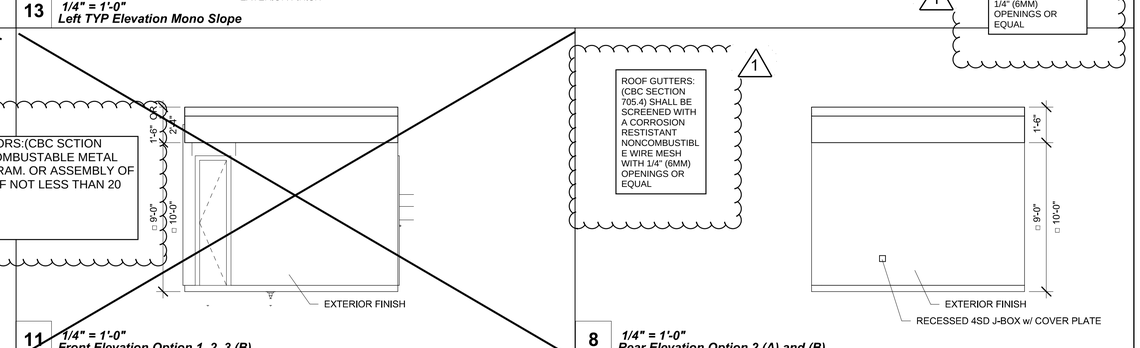

11 1/4" = 1'-0"
Front Elevation Option 1, 2, 3 (B)

8 1/4" = 1'-0"
Rear Elevation Option 2 (A) and (B)

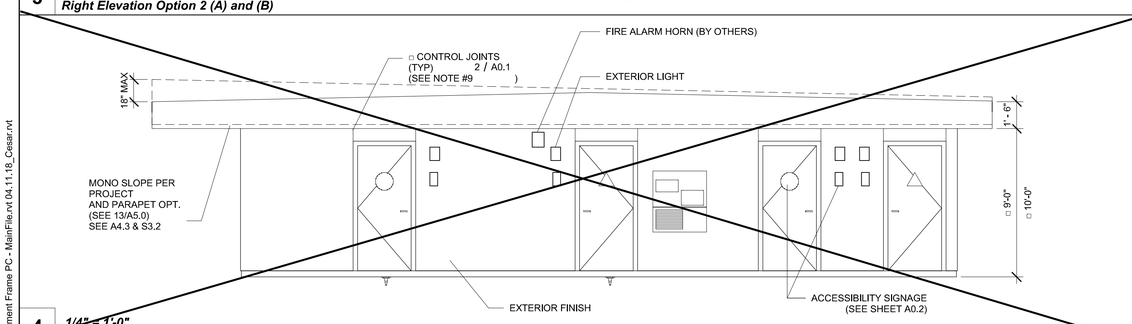

4 1/4" = 1'-0"
Right Elevation Option 3 (A) and (B)

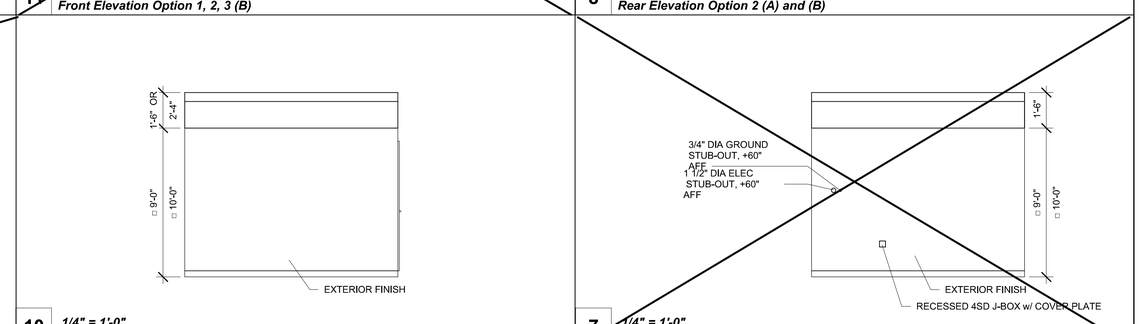

10 1/4" = 1'-0"
Front Elevation Option 1, 2, 3 (A) and 1 (C)

7 1/4" = 1'-0"
Rear TYP Elevation

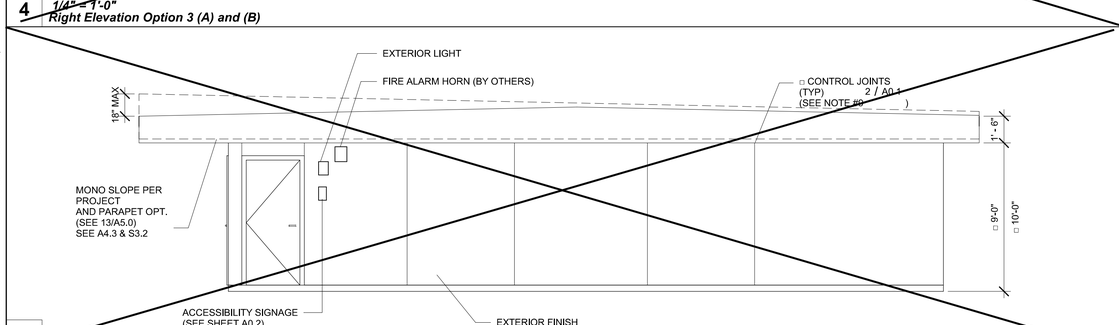

5 1/4" = 1'-0"
Right Elevation Work Room

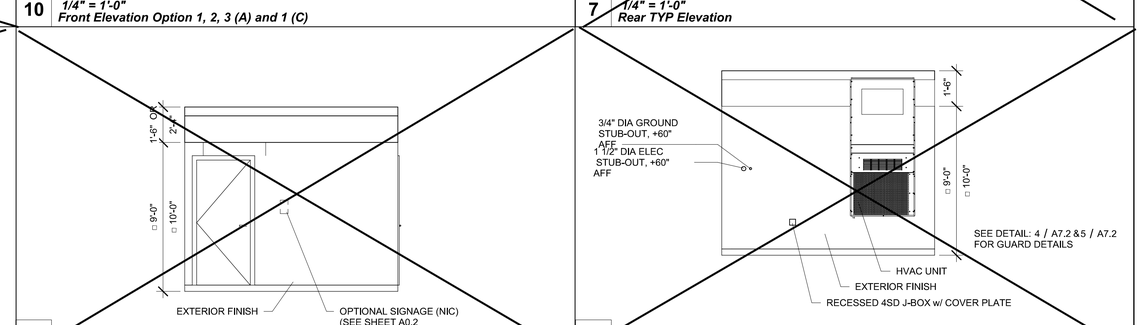

12 1/4" = 1'-0"
Front Elevation Work Room

9 1/4" = 1'-0"
Rear Elevation Work Room

IDENTIFICATION STAMP
DIV. OF THE STATE ARCHITECT
APP: 01-119031 INC:
REVIEWED FOR
SS ☑ FLS ☑ ACS ☑
DATE: 10/22/2020

PROFESSIONAL STAMP

REGISTERED PROFESSIONAL ENGINEER
SEAMUS MAY D. RUSH
No. S3380
STRUCTURAL
STATE OF CALIFORNIA
11.28.2018

THE PLANS, IDEAS & DESIGNS SHOWN ON THESE DRAWINGS ARE THE PROPERTY OF R&S TAVARES ASSOCIATES, INC. DEVISED SOLELY FOR THIS CONTRACT. THESE PLANS SHALL NOT BE USED, IN WHOLE OR IN PART, FOR ANY PURPOSE FOR WHICH THEY WERE NOT INTENDED WITHOUT THE EXPRESS WRITTEN CONSENT OF R&S TAVARES ASSOCIATES, INC. ©

CLIENT

CLASS LEASING LLC
1221 Harley Knox Boulevard
Perris, CA 92571

ORIGINAL PC STATE AGENCY APPROVAL

FILE NUMBER: PC-128
IDENTIFICATION STAMP
DIVISION OF THE STATE ARCHITECT
APP. NO: 04 - 116501 INCR :
AC RM FLS RF SS KR
DATE 2/13/2019

PROJECT TITLE
12' x 40'

PROJECT SPECIFIC STATE AGENCY APPROVAL

Revision Schedule

#	Description	Date
1	ADD WUI SPECIFICATION	

SHEET TITLE
EXTERIOR ELEVATIONS

PROJECT NUMBER
17030

DRAWN BY
rMc

CHECKED BY
RT

DATE
11.28.2018

SHEET NO.
A5.0

SHEET OF SHEETS

Proprietary Property of Class Leasing
Proprietary Property of Class Leasing
Proprietary Property of Class Leasing

C:\Users\Cesar\Documents\17030 - Aries, 12x40 Moment Frame PC - MainFile.rvt 04.11.18_Cesar.rvt
5/4/2018 8:36:40 AM

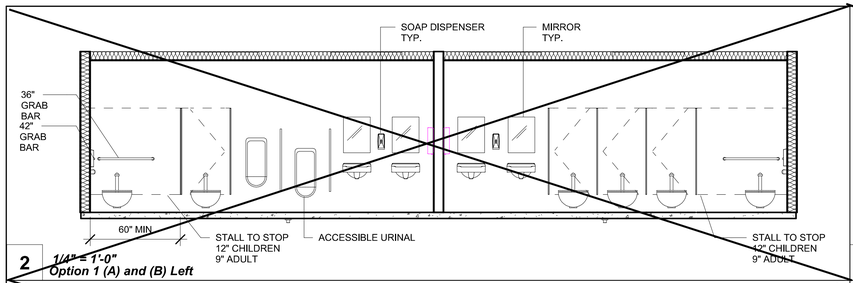

2 1/4" = 1'-0"
Option 1 (A) and (B) Left

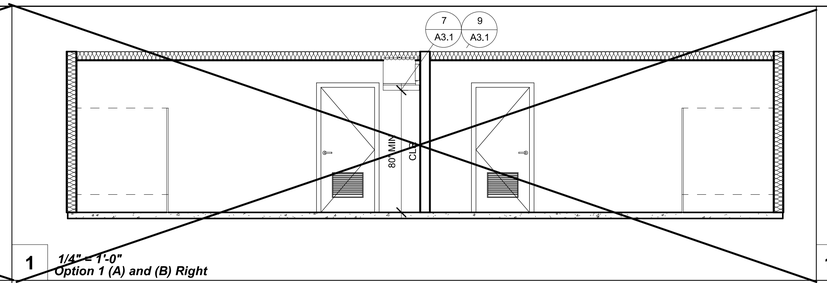

1 1/4" = 1'-0"
Option 1 (A) and (B) Right

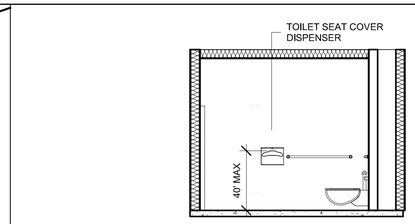

13 1/4" = 1'-0"
ADA

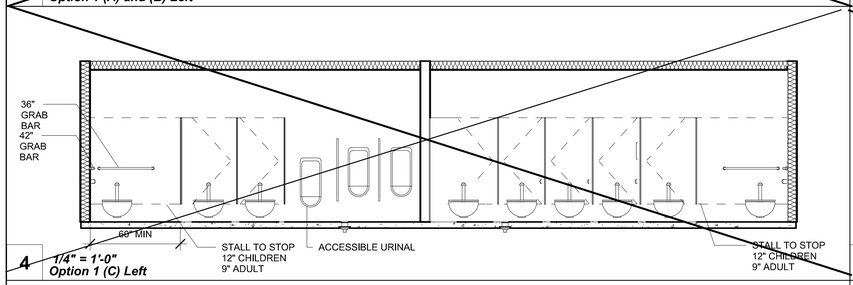

4 1/4" = 1'-0"
Option 1 (C) Left

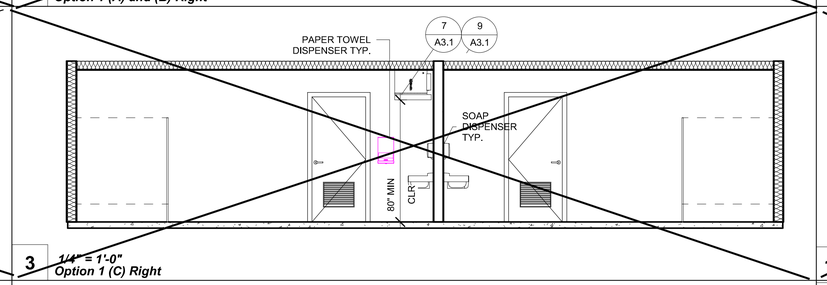

3 1/4" = 1'-0"
Option 1 (C) Right

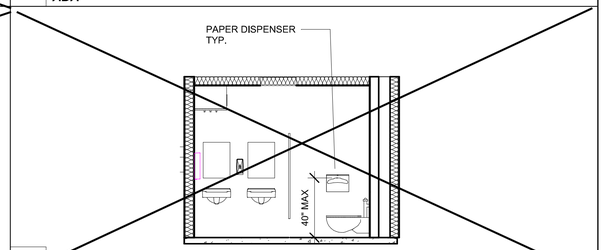

14 1/4" = 1'-0"
Elevation 1 - a

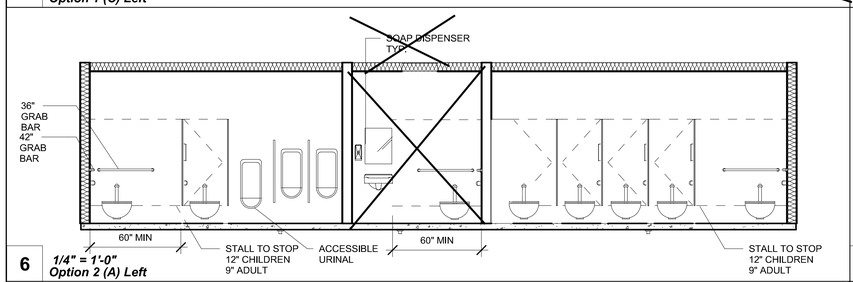

6 1/4" = 1'-0"
Option 2 (A) Left

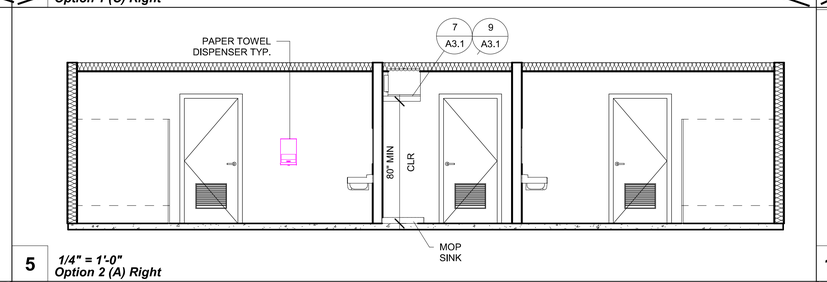

5 1/4" = 1'-0"
Option 2 (A) Right

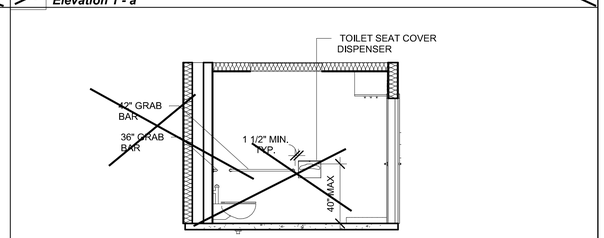

15 1/4" = 1'-0"
Elevation 2 - a

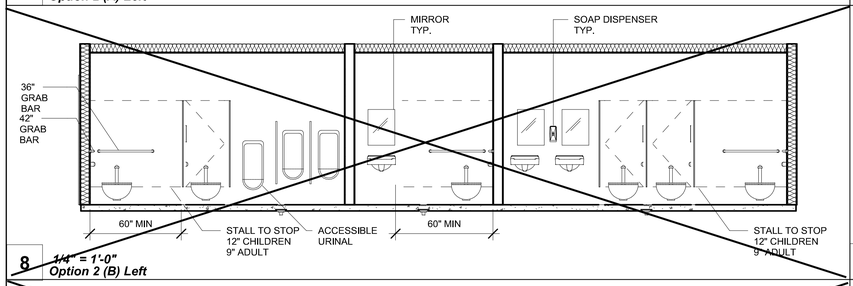

8 1/4" = 1'-0"
Option 2 (B) Left

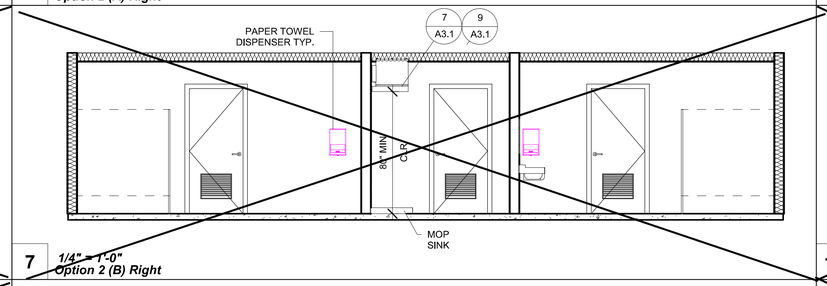

7 1/4" = 1'-0"
Option 2 (B) Right

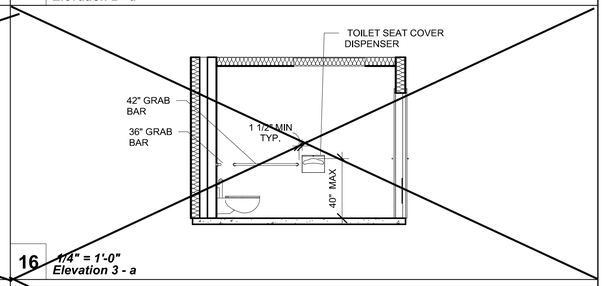

16 1/4" = 1'-0"
Elevation 3 - a

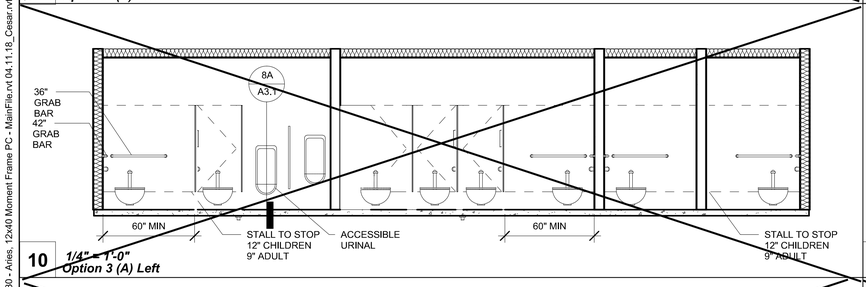

10 1/4" = 1'-0"
Option 3 (A) Left

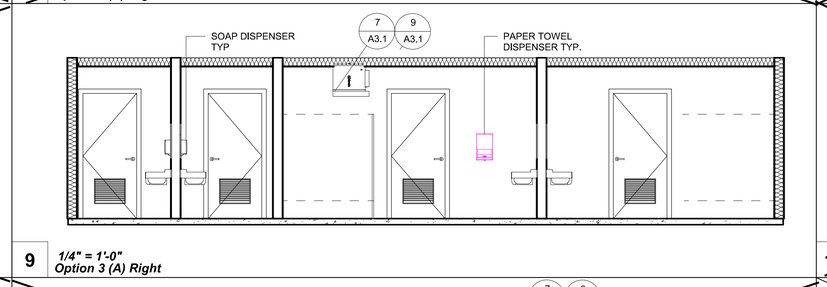

9 1/4" = 1'-0"
Option 3 (A) Right

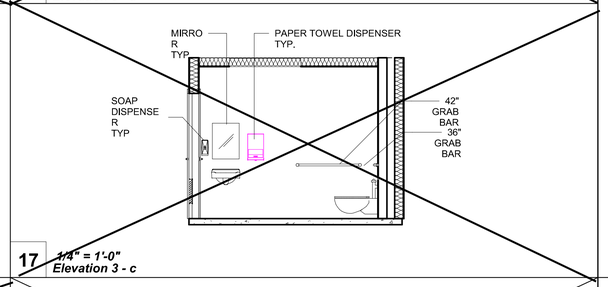

17 1/4" = 1'-0"
Elevation 3 - c

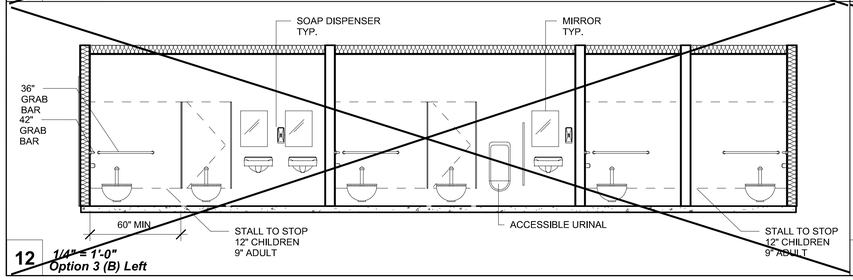

12 1/4" = 1'-0"
Option 3 (B) Left

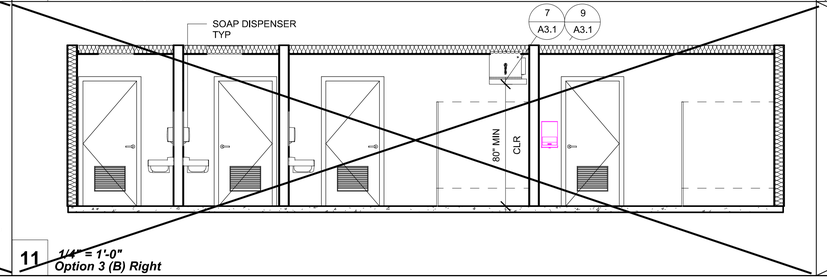

11 1/4" = 1'-0"
Option 3 (B) Right

IDENTIFICATION STAMP
DIV. OF THE STATE ARCHITECT
APP: 01-119031 INC:
REVIEWED FOR
SS ☑ FLS ☑ ACS ☑
DATE: 10/22/2020

PROFESSIONAL STAMP

REGISTERED PROFESSIONAL ENGINEER
MARK D. RENNER
No. S3380
STRUCTURAL
STATE OF CALIFORNIA
11.28.2018

THE PLANS, IDEAS & DESIGNS SHOWN ON THESE DRAWINGS ARE THE PROPERTY OF R&S TAVARES ASSOCIATES, INC. DEVISED SOLELY FOR THIS CONTRACT. THESE PLANS SHALL NOT BE USED, IN WHOLE OR IN PART, FOR ANY PURPOSE FOR WHICH THEY WERE NOT INTENDED WITHOUT THE EXPRESS WRITTEN CONSENT OF R&S TAVARES ASSOCIATES, INC. ©

CLIENT

CLASS LEASING LLC
1221 Harley Knox Boulevard
Perris, CA 92571

ORIGINAL PC STATE AGENCY APPROVAL

FILE NUMBER: PC-128
IDENTIFICATION STAMP
DIVISION OF THE STATE ARCHITECT
APP. NO: 04 - 116501 INCR :
AC RM FLS RF SS KR
DATE 2/13/2019

PROJECT TITLE
12' x 40'

PROJECT SPECIFIC STATE AGENCY APPROVAL

Revision Schedule

#	Description	Date

SHEET TITLE
INTERIOR ELEVATIONS

PROJECT NUMBER
17030

DRAWN BY
rMc

CHECKED BY
RT

DATE
11.28.2018

SHEET NO.
A5.1

SHEET OF SHEETS

Proprietary Property of Class Leasing
Proprietary Property of Class Leasing
Proprietary Property of Class Leasing

C:\Users\Cesar\Documents\17030 - Aries, 12x40 Moment Frame PC - MainFile.rvt 04.11.18_Cesar.rvt
5/4/2018 8:36:54 AM

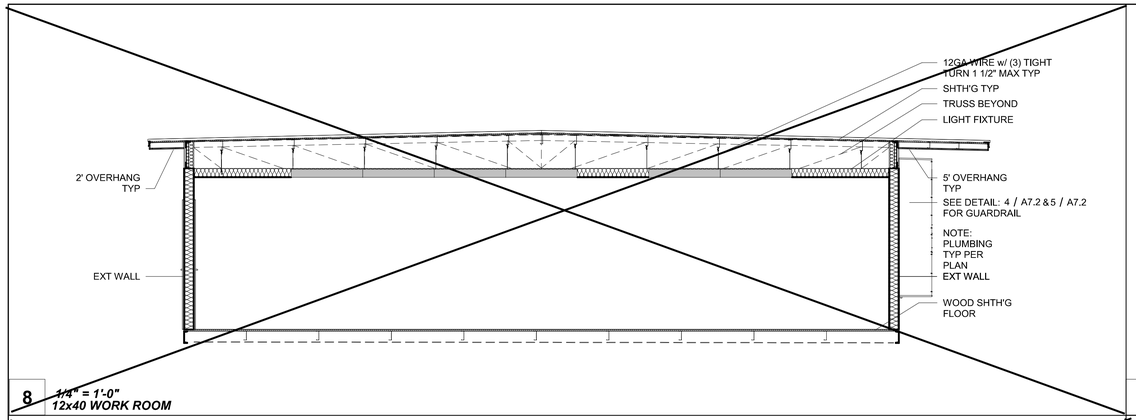

8 1/4" = 1'-0"
12x40 WORK ROOM

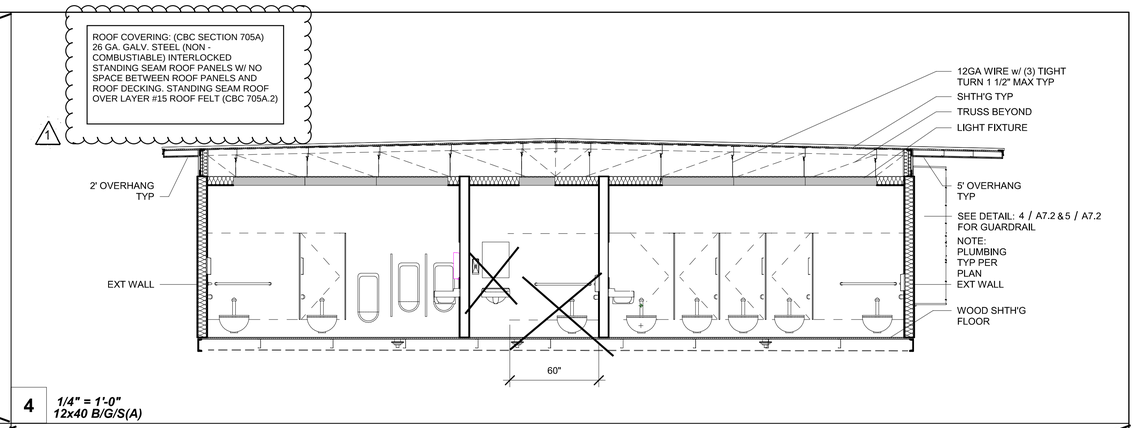

4 1/4" = 1'-0"
12x40 B/G/S(A)

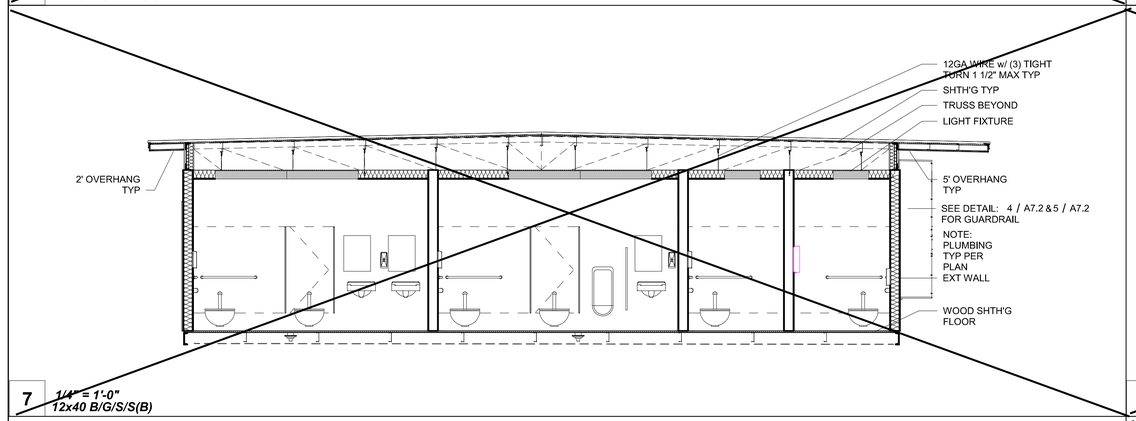

7 1/4" = 1'-0"
12x40 B/G/S/S(B)

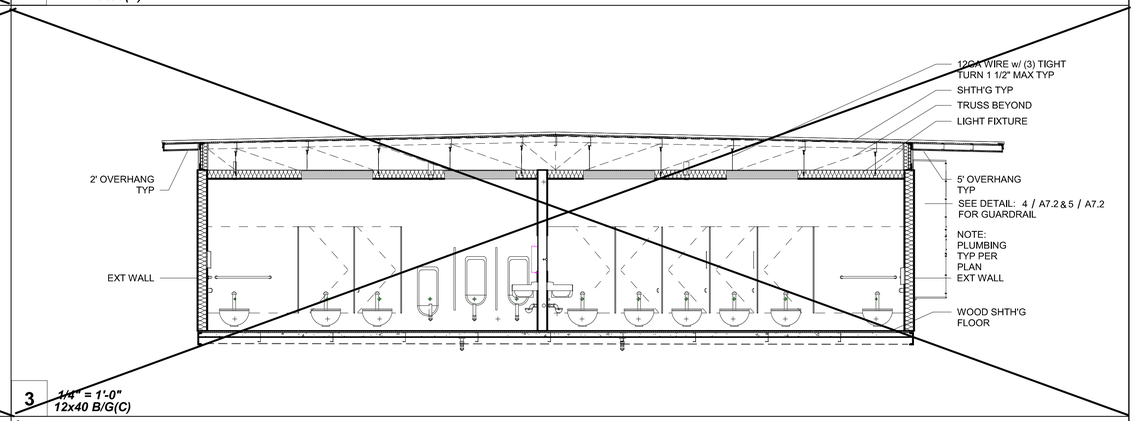

3 1/4" = 1'-0"
12x40 B/G(C)

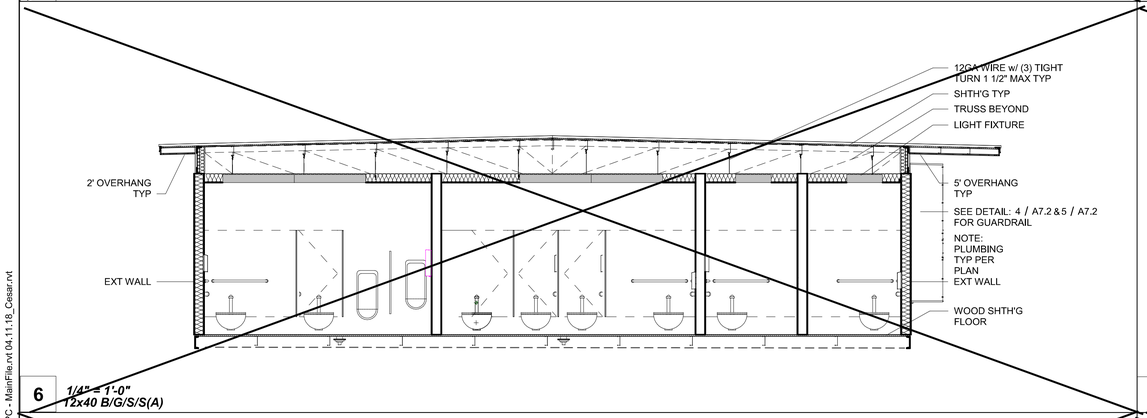

6 1/4" = 1'-0"
12x40 B/G/S/S(A)

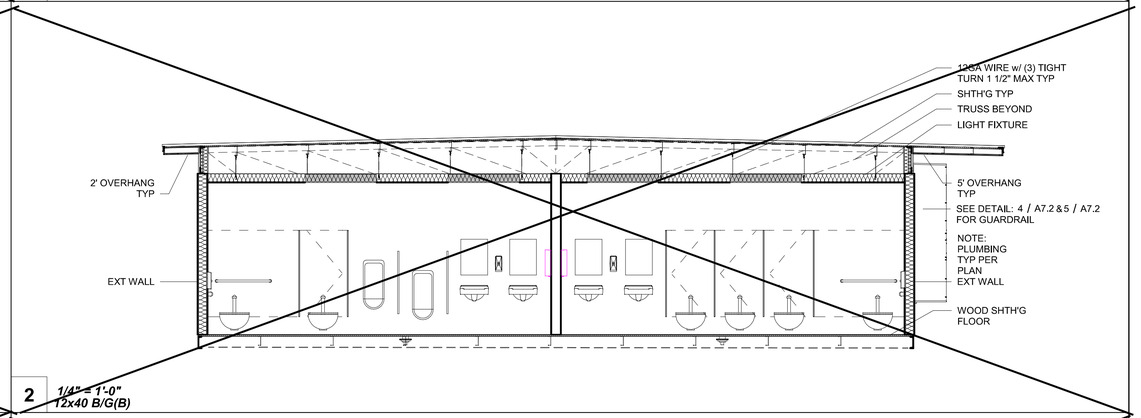

2 1/4" = 1'-0"
12x40 B/G(B)

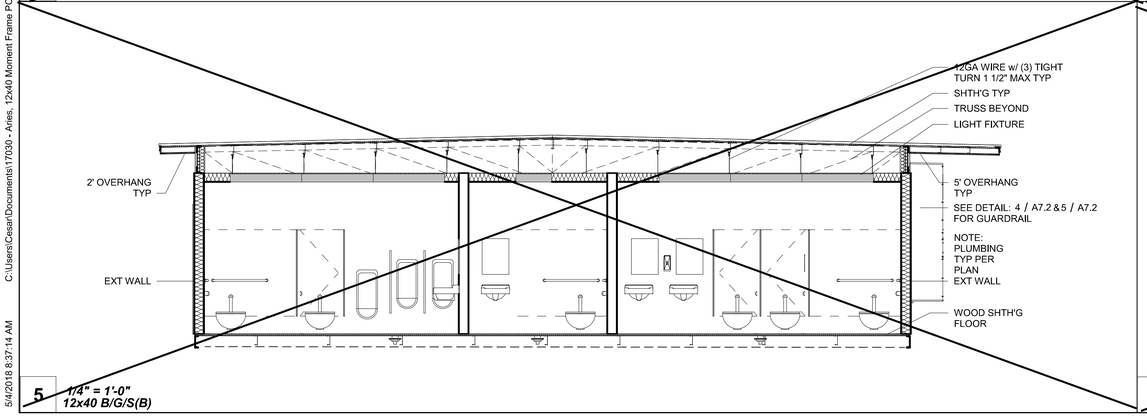

5 1/4" = 1'-0"
12x40 B/G/S(B)

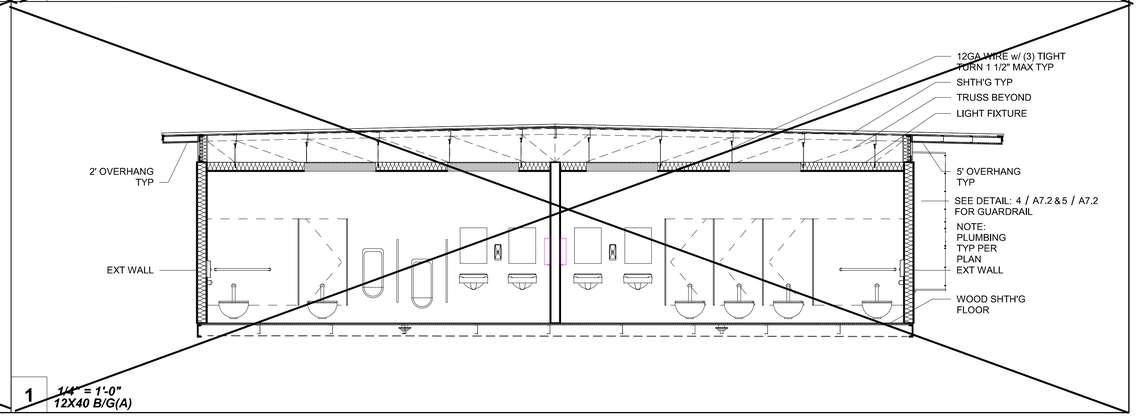

1 1/4" = 1'-0"
12X40 B/G(A)

IDENTIFICATION STAMP
DIV. OF THE STATE ARCHITECT
APP: 01-119031 INC:
REVIEWED FOR
SS ☑ FLS ☑ ACS ☑
DATE: 10/22/2020

PROFESSIONAL STAMP

REGISTERED PROFESSIONAL ENGINEER
MARK D. RAMER
No. S3380
STRUCTURAL
STATE OF CALIFORNIA

11.28.2018

THE PLANS, IDEAS & DESIGNS SHOWN ON THESE DRAWINGS ARE THE PROPERTY OF R&S TAVARES ASSOCIATES, INC. DEVISED SOLELY FOR THIS CONTRACT. THESE PLANS SHALL NOT BE USED, IN WHOLE OR IN PART, FOR ANY PURPOSE FOR WHICH THEY WERE NOT INTENDED WITHOUT THE EXPRESS WRITTEN CONSENT OF R&S TAVARES ASSOCIATES, INC. ©

CLIENT

CLASS LEASING LLC
1221 Harley Knox Boulevard
Perris, CA 92571

ORIGINAL PC STATE AGENCY APPROVAL

FILE NUMBER: PC-128
IDENTIFICATION STAMP
DIVISION OF THE STATE ARCHITECT
APP. NO: 04 - 116501 INCR :
AC RM FLS RF SS KR
DATE 2/13/2019

PROJECT TITLE
12' x 40'

PROJECT SPECIFIC STATE AGENCY APPROVAL

Revision Schedule

#	Description	Date
1	ADD WUI SPECIFICATION	

SHEET TITLE
ARCHITECTURAL SECTIONS

PROJECT NUMBER
17030

DRAWN BY
rMc

CHECKED BY
C RT ar

DATE
11.28.2018

SHEET NO.
A6.0

SHEET OF SHEETS

Proprietary Property of Class Leasing
Proprietary Property of Class Leasing
Proprietary Property of Class Leasing

5/4/2018 8:37:14 AM C:\Users\Cesar\Documents\17030 - Aries, 12x40 Moment Frame PC - MainFile.rvt 04.11.18_Cesar.rvt

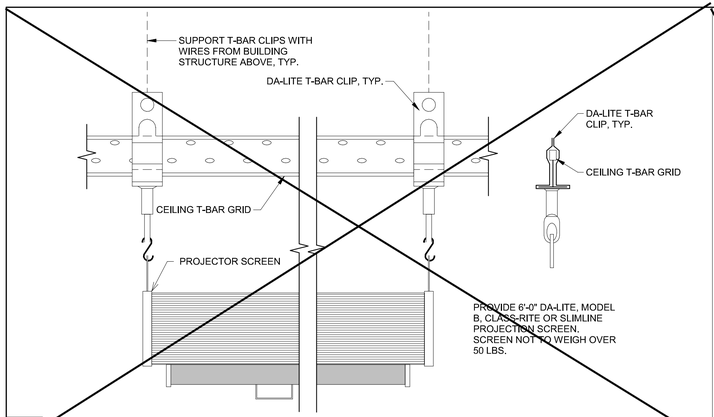

7 *1 1/2" = 1'-0"*
Projection Screen Mounting

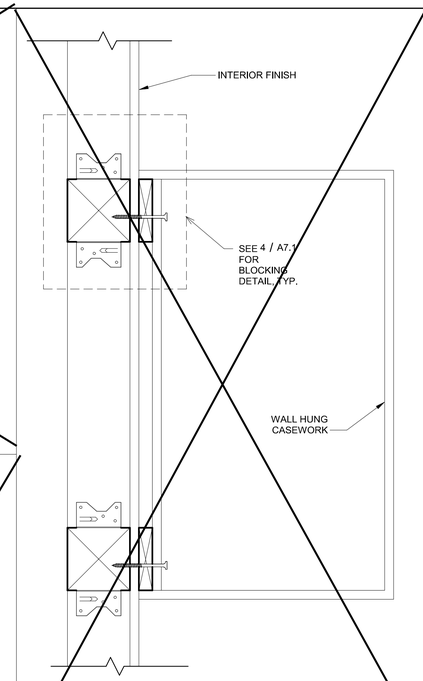

5 *3" = 1'-0"*
Wall Hung Anchorage Cabinet at Wood Stud

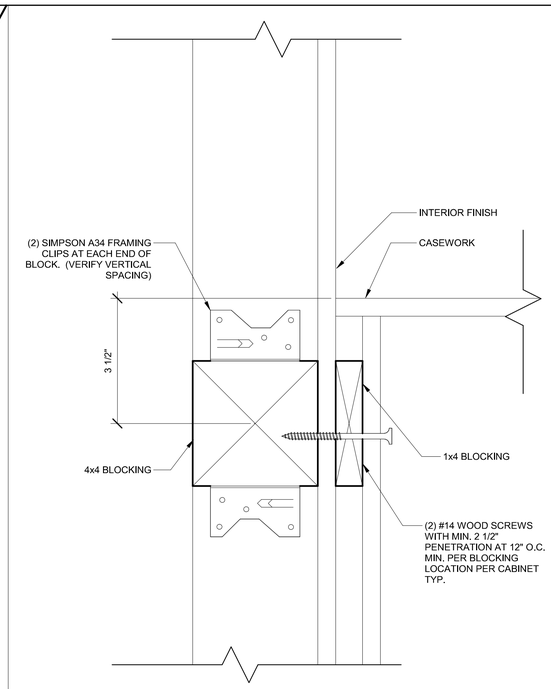

4 *6" = 1'-0"*
Attachment to Blocking at Wood Stud

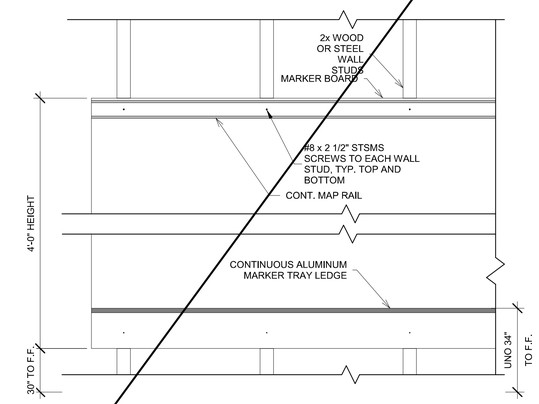

3 *1 1/2" = 1'-0"*
Marker Board Attachment

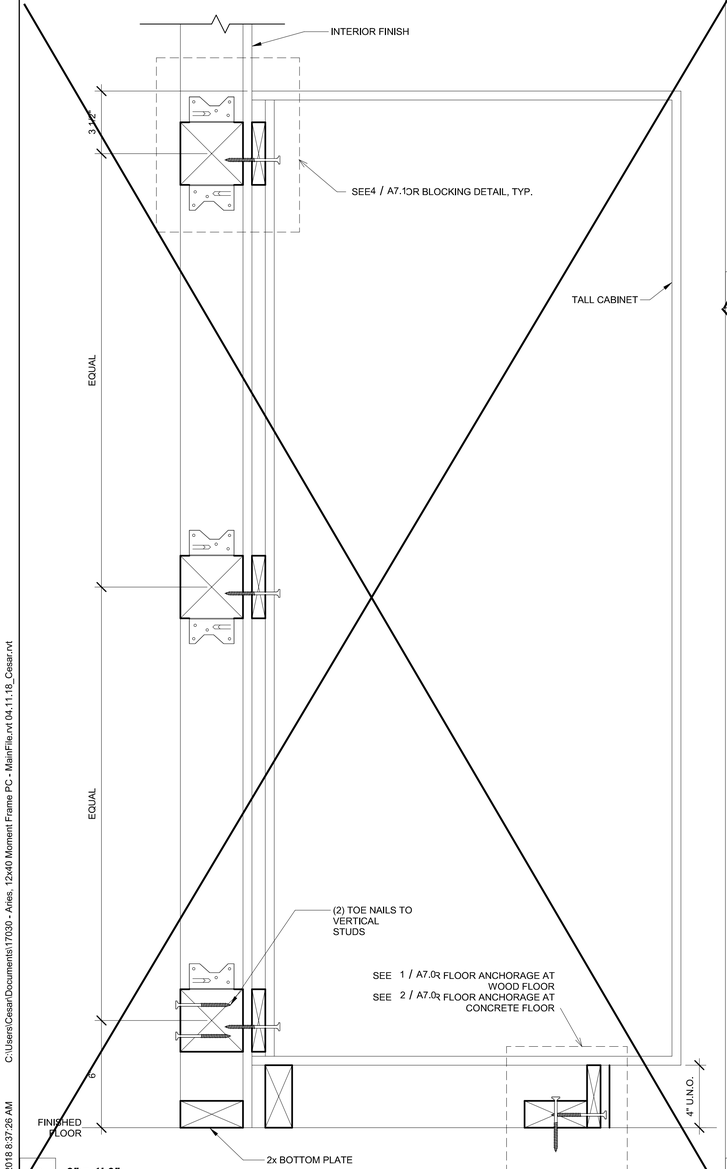

6 *3" = 1'-0"*
Tall Cabinet Wall Anchorage at Wood Stud

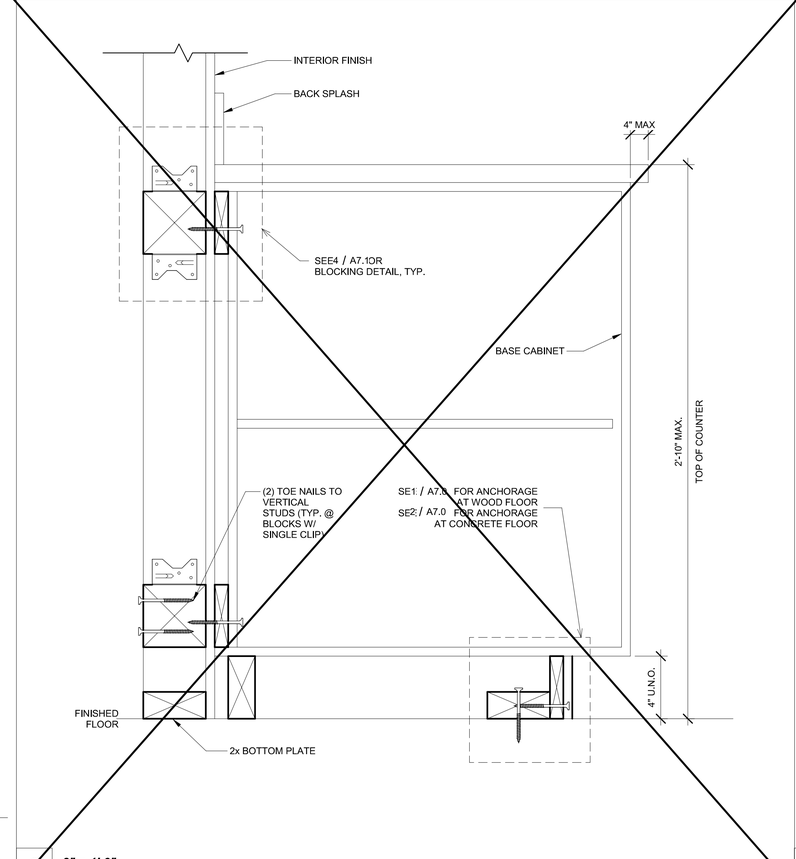

2 *3" = 1'-0"*
Base Cabinet Wall Anchorage at Wood Stud

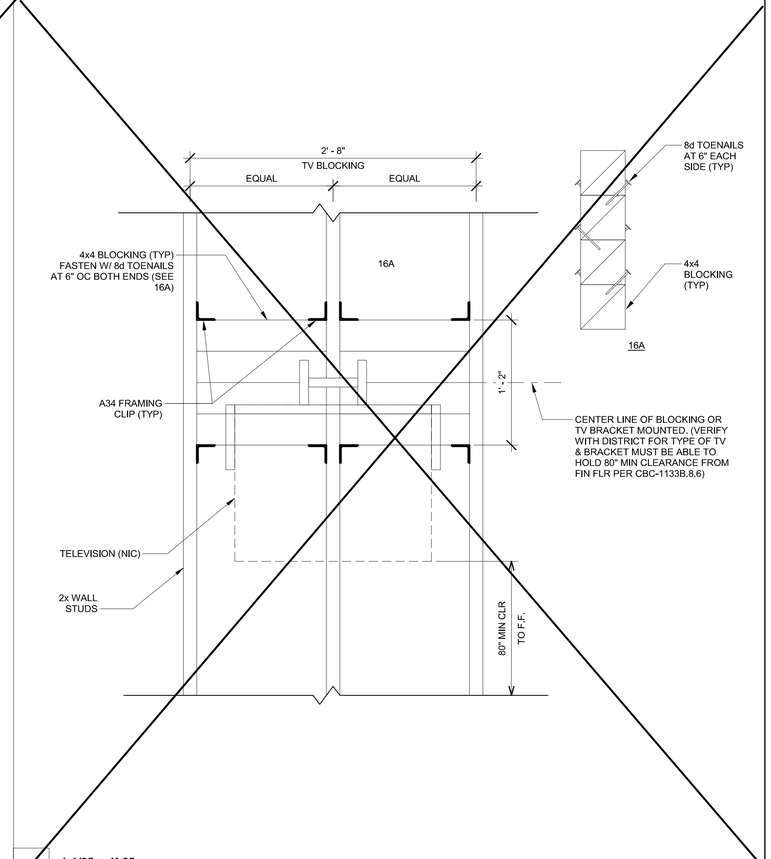

1 *1 1/2" = 1'-0"*
T.V. Blocking Attachment at Wood Stud

IDENTIFICATION STAMP
DIV. OF THE STATE ARCHITECT
APP: 01-119031 INC:
REVIEWED FOR
SS ☑ FLS ☑ ACS ☑
DATE: 10/22/2020

PROFESSIONAL STAMP

REGISTERED PROFESSIONAL ENGINEER
GERMANY D. RAMIREZ
No. S3380
STRUCTURAL
STATE OF CALIFORNIA

11.28.2018

THE PLANS, IDEAS & DESIGNS SHOWN ON THESE DRAWINGS ARE THE PROPERTY OF R&S TAVARES ASSOCIATES, INC. DEVISED SOLELY FOR THIS CONTRACT. THESE PLANS SHALL NOT BE USED, IN WHOLE OR IN PART, FOR ANY PURPOSE FOR WHICH THEY WERE NOT INTENDED WITHOUT THE EXPRESS WRITTEN CONSENT OF R&S TAVARES ASSOCIATES, INC. ©

CLIENT

CLASS LEASING LLC
1221 Harley Knox Boulevard
Perris, CA 92571

ORIGINAL PC STATE AGENCY APPROVAL

FILE NUMBER: PC-128
IDENTIFICATION STAMP
DIVISION OF THE STATE ARCHITECT
APP. NO: 04 - 116501 INCR :
AC RM FLS RF SS KR
DATE 2/13/2019

PROJECT TITLE
12' x 40'

PROJECT SPECIFIC STATE AGENCY APPROVAL

Revision Schedule

#	Description	Date

SHEET TITLE
ADDITIONAL OPTION DETAILS

PROJECT NUMBER
17030

DRAWN BY
rMc

CHECKED BY
C RT ar

DATE
11.28.2018

SHEET NO.
A7.1

SHEET OF SHEETS

Proprietary Property of Class Leasing

5/4/2018 8:37:26 AM C:\Users\Cesar\Documents\17030 - Aries, 12x40 Moment Frame PC - MainFile.rvt 04.11.18_Cesar.rvt

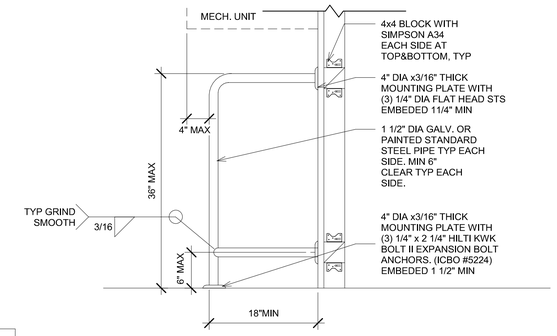

5 *1" = 1'-0"*
HVAC BARRIER at wood stud

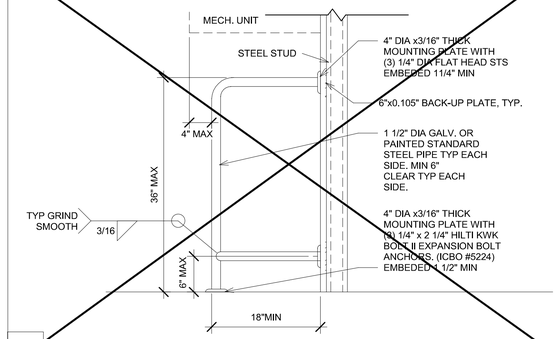

4 *1" = 1'-0"*
HVAC BARRIER at steel stud

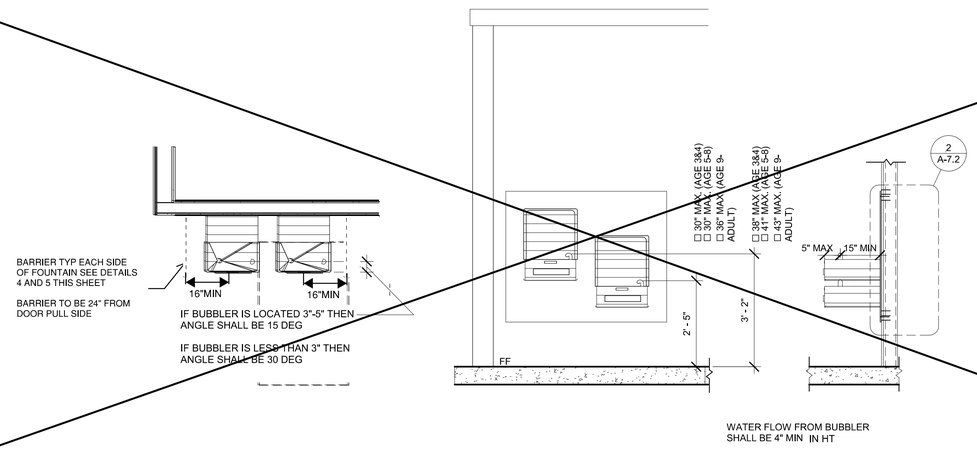

6 *1/2" = 1'-0"*
Drinking Fountain Blocking Detail steel stud1

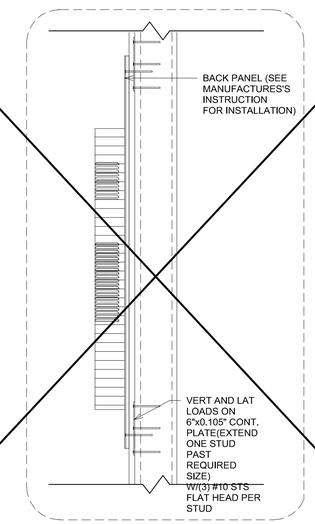

2 *1 1/2" = 1'-0"*
Section Cut 11A/A-5.1

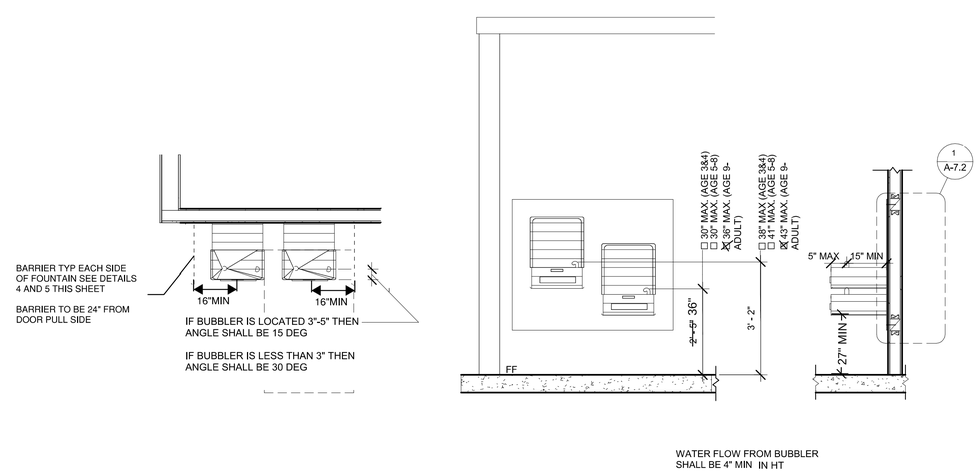

3 *1/2" = 1'-0"*
Drinking Fountain Blocking Detail wood stud1

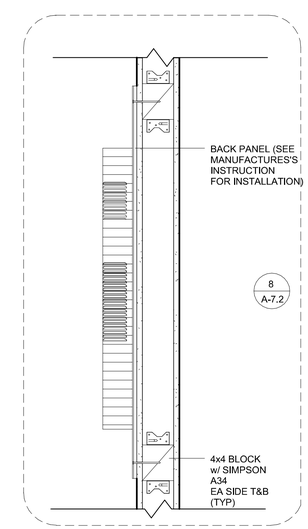

1 *1 1/2" = 1'-0"*
Section Cut 1A/A-5.1

IDENTIFICATION STAMP
DIV. OF THE STATE ARCHITECT
APP: 01-119031 INC:
REVIEWED FOR
SS ☑ FLS ☑ ACS ☑
DATE: 10/22/2020

PROFESSIONAL STAMP

REGISTERED PROFESSIONAL ENGINEER
GERMANY D. RAMSEY
No. S3380
STRUCTURAL
STATE OF CALIFORNIA
11.28.2018

THE PLANS, IDEAS & DESIGNS SHOWN ON THESE DRAWINGS ARE THE PROPERTY OF R&S TAVARES ASSOCIATES, INC. DEVISED SOLELY FOR THIS CONTRACT. THESE PLANS SHALL NOT BE USED, IN WHOLE OR IN PART, FOR ANY PURPOSE FOR WHICH THEY WERE NOT INTENDED WITHOUT THE EXPRESS WRITTEN CONSENT OF R&S TAVARES ASSOCIATES, INC. ©

CLIENT

CLASS LEASING LLC
1221 Harley Knox Boulevard
Perris, CA 92571

ORIGINAL PC STATE AGENCY APPROVAL

FILE NUMBER: PC-128
IDENTIFICATION STAMP
DIVISION OF THE STATE ARCHITECT
APP. NO: 04 - 116501 INCR :
AC RM FLS RF SS KR
DATE 2/13/2019

PROJECT TITLE
12' x 40'

PROJECT SPECIFIC STATE AGENCY APPROVAL

Revision Schedule

#	Description	Date

SHEET TITLE
ADDITIONAL OPTION DETAILS

PROJECT NUMBER
17030

DRAWN BY
rMc

CHECKED BY
C RT ar

DATE
11.28.2018

SHEET NO.
A7.2

SHEET OF SHEETS

Proprietary Property of Class Leasing
Proprietary Property of Class Leasing
Proprietary Property of Class Leasing

5/4/2018 8:37:33 AM C:\Users\Cesar\Documents\17030 - Aries, 12x40 Moment Frame PC - MainFile.rvt 04-11.18_Cesar.rvt

REFER TO DSA IR 16-8 & STATE FIRE MARSHAL SOLAR PHOTOVOLTAIC INSTALLATION GUIDELINE

REFER TO **SECTION 110.10 - MANDATORY REQUIREMENTS FOR SOLAR READY BUILDINGS**
SOLAR ZONE AREAS WILL VARY DEPENDING ON PC BUILDING LOCATION.

MINIMUM AREA:

15% OF ROOF AREA (EXCLUDING ANY SKYLIGHT AREA) TO BE RESERVED FOR SOLAR PANEL APPLICATION OR SOLAR READY WILL BE SUPPLIED FROM A BUILDING OR STRUCTURE WITHIN 250 FT OF PC BUILDING.

ORIENTATION:

ALL SECTIONS OF THE SOLAR ZONE LOCATED ON STEEP-SLOPED ROOFS GREATER THAN 2:12 SHALL BE ORIENTED BETWEEN 110 DEGREES AND 270 DEGREES OF TRUE NORTH.

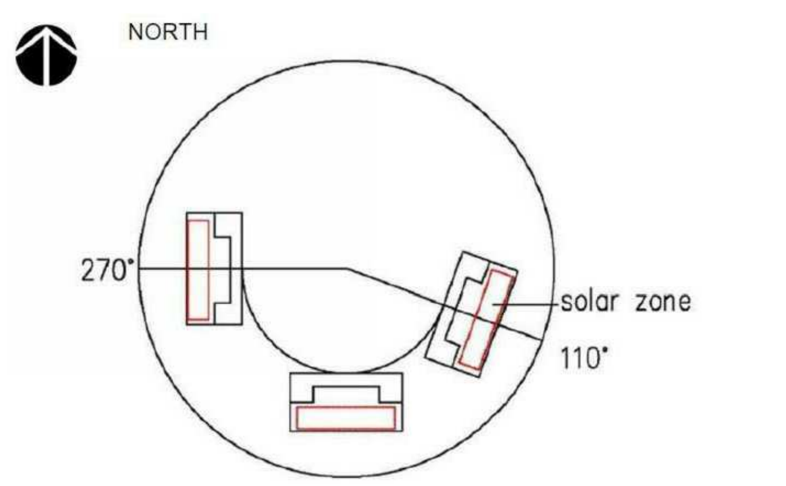

SHADING:

ANY OBSTRUCTION, LOCATED ON THE ROOF OR ANY OTHER PART OF THE BUILDING THAT PROJECTS ABOVE THE SOLAR ZONE SHALL BE LOCATED AT A SUFFICIENT HORIZONTAL DISTANCE AWAY FROM THE SOLAR ZONE, IN ORDER TO REDUCE THE RESULTING SHADING OF THE SOLAR ZONE. FOR EACH OBSTRUCTION, THE HORIZONTAL DISTANCE ("D") FROM THE OBSTRUCTION TO THE SOLAR ZONE SHALL BE AT LEAST TWO TIMES THE HEIGHT DIFFERENCE ("H") BETWEEN THE HIGHEST POINT OF THE OBSTRUCTION AND THE HORIZONTAL PROJECTION OF THE NEAREST POINT OF THE SOLAR ZONE.

D ≥ 2 x H

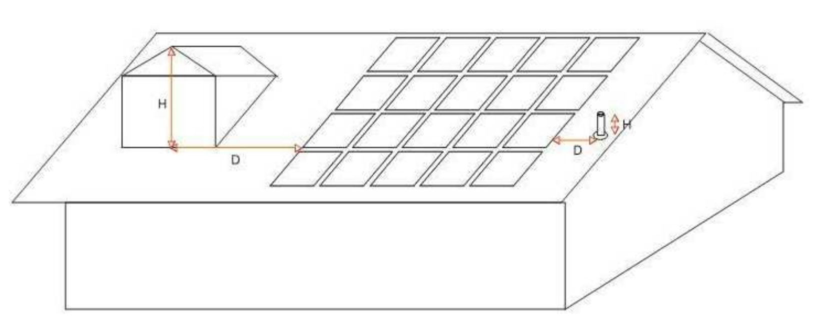

SOURCE: CALIFORNIA ENERGY COMMISSION

STRUCTURAL DESIGN LOADS:

ENTIRE ROOF SURFACE IS DESIGNED STRUCTURALLY TO ACCOMMODATE SOLAR PANELS = 3 PSF

INTERCONNECTION PATHWAYS:

THE LOCATION FOR INVERTERS AND METERING EQUIPMENT AND A PATHWAY FOR ROUTING OF CONDUIT FROM THE SOLAR ZONE TO THE POINT OF INTERCONNECTION WITH THE ELECTRICAL SERVICE WILL VARY DEPENDING ON PC BUILDING LOCATION.

1 SOLAR ZONE AREA

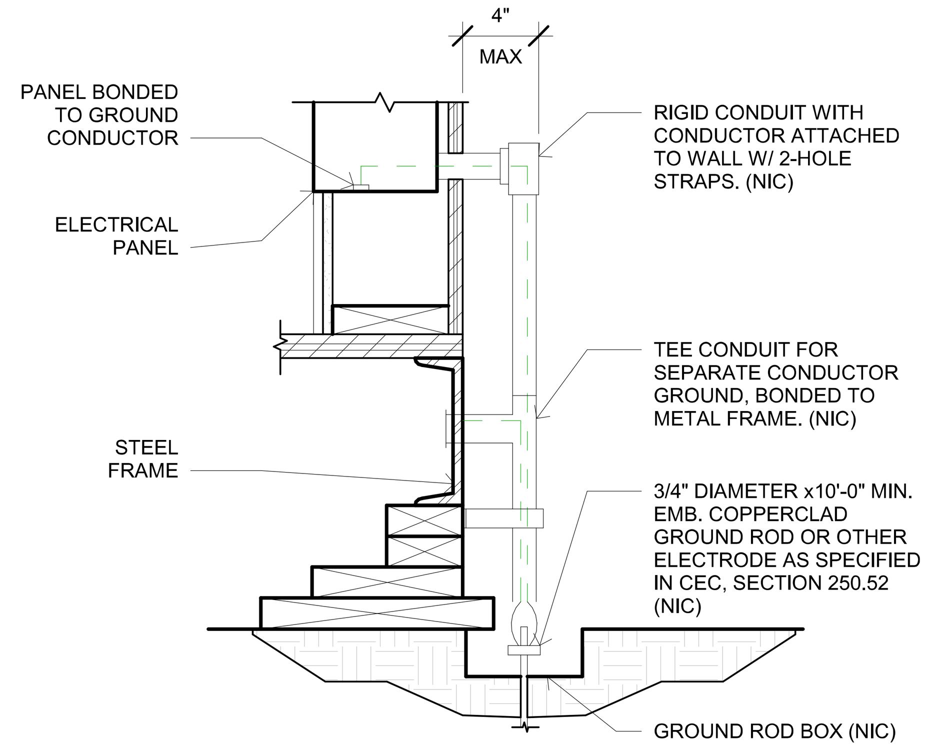

NOTES:

1. SIZE OF CONDUCTORS SHALL COMPLY WITH CEC TABLE 250.66
2. ELEC. TRADE SHALL CHECK AREA FOR EXISTING CONDUITS, SEWER, GAS & WATER PIPING BEFORE DRIVING GROUND RODS.
3. BOND SEPARATE CONDUCTORS FROM GROUND ROD TO ELEC'L. PANEL & TO METAL BUILDING FRAME (CEC 250.52) IN ADDITION TO THE DETAIL SHOWN ABOVE. BOND THE ELECTRICAL GROUND TO METAL UNDERGROUND WATER PIPE IN DIRECT CONTACT WITH THE EARTH FOR 10 FT. OR MORE, IF AVAILABLE (CEC 250.52)
4. ALL MODULES OF STEEL FRAME BLDGS. SHALL BE ELECTRICALLY BONDED TOGETHER (BOLTING ONLY IS NOT ACCEPTABLE BONDING). BONDING SHALL INCLUDE METAL RAMP & STAIRS.
5. CHECK RESISTANT TO GROUND ROD. IF RESISTANCE EXCEEDS 25 OHMS. INSTALL ADDITIONAL GROUND RODS WITH CONDUCTORS AS SHOWN SEPARATED AT LEAST 6'-0" UNTIL RESISTANCE IS REDUCED TO 25 OHMS OR LESS (CEC 250.56).

2 1 1/2" = 1'-0"
2. TYPICAL GROUNDING DETAIL3

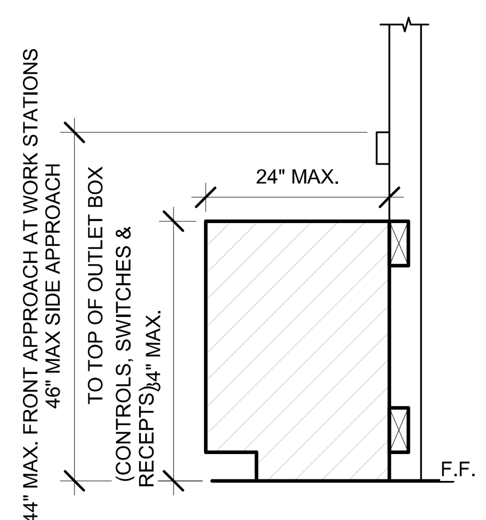

OVER
OBSTRUCTION

3 1" = 1'-0"
3. OVER OBSTRUCTION3

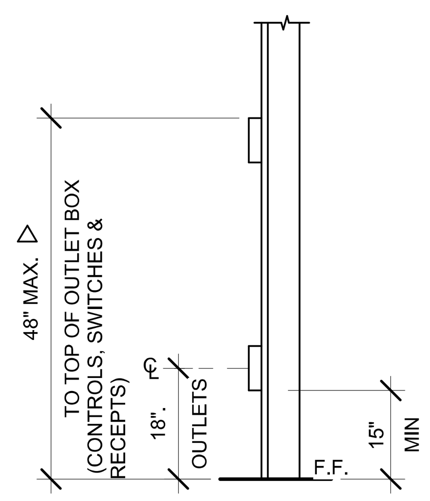

ELECTRICAL MOUNTING
HEIGHTS

4 1" = 1'-0"
4. ELECTRICAL MOUNTING HEIGHTS3

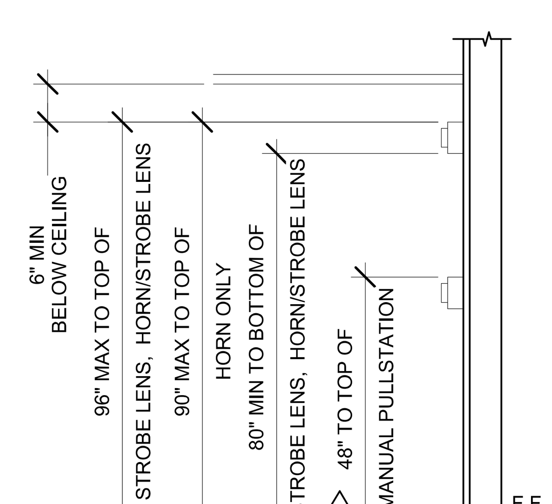

△ PROVIDE MIN 30"x48" CLR FLOOR SPACE FOR PERPENDICULAR APPROACH AT EACH LOCATION

5 1" = 1'-0"
5. FIRE ALARM MOUNTING HEIGHTS3

GENERAL GROUNDING NOTES

EACH BUILDING SHALL BE SEPARATELY GROUNDED WITH A 3/4" RD.x 8' COPPERCLAD STEEL GROUND ROD, WHERE ROCK BOTTOM IS ENCOUNTERED, ROD SHALL BE DRIVEN AT AN ANGLE NOT TO EXCEED 45 DEGREE'S FROM THE VERTICAL OR SHALL BE BURIED IN A TRENCH THAT IS AT LEAST 30" DEEP (BY SITE ELECTRICAL).

TESTING: TEST FOR RESISTANCE TO GROUND, IF RESISTANCE EXCEEDS 25 OHMS. INSTALL ADDITIONAL GROUND RODS SEPARATED AT LEAST 6'-0" UNTIL RESISTANCE IS REDUCES TO 25 OHMS OR LESS. (BY SITE ELECTRICAL).

APPROVAL OF THIS PLAN DOES NOT CONSTITUTE APPROVAL OF THIS FIRE ALARM FOR ALL SITES. THE FIRE ALARM SYSTEM AND/OR COMPONENTS MAYBE REQUIRED TO BE CHANGED DUE TO SITE LOCATION EXISTING CONDITIONS OR INCOMPATIBLE COMPONENTS.

GROUND MG TEST SHALL BE DONE IN THE PRESENCE OF THE PROJECT INSPECTOR. ALL GROUNDING SHALL BE IN ACCORDANCE WITH CEC ARTICLE 250.

6 1" = 1'-0"
6. GENERAL GROUNDING NOTES3

EQUIPMENT ANCHORAGE

ALL MECHANICAL, PLUMBING AND ELECTRICAL COMPONENTS SHALL BE ANCHORED AND INSTALLED PER THE DETAILS ON THE DSA APPROVED CONSTRUCTION DOCUMENTS. WHERE NO DETAIL IS INDICATED, THE FOLLOWING COMPONENTS SHALL BE ANCHORED OR BRACED TO MEET THE FORCE AND DISPLACEMENT REQUIREMENTS PRESCRIBED IN THE 2013 CBC, SECTIONS 1615A.1.12 THROUGH 1615A.1.22 AND ASCE 7-10 CHAPTER 13 AND 26.

1. ALL PERMANENT EQUIPMENT AND COMPONENTS.
2. TEMPORARY OR MOVABLE EQUIPMENT THAT IS PERMANENTLY ATTACHED (E.G. HARD WIRED) TO THE BUILDING UTILITY SERVICES SUCH AS ELECTRICITY, GAS OR WATER.
3. MOVABLE EQUIPMENT WHICH IS STATIONED IN ONE PLACE FOR MORE THAN 8 HOURS AND HEAVIER THAN 400 POUNDS ARE REQUIRED TO BE ANCHORED WITH TEMPORARY ATTACHMENTS.

THE ATTACHMENT OF THE FOLLOWING MECHANICAL AND ELECTRICAL COMPONENTS SHALL BE POSITIVELY ATTACHED TO THE STRUCTURE, BUT NEED NOT BE DETAILED ON THE PLANS. THESE COMPONENTS SHALL HAVE FLEXIBLE CONNECTIONS PROVIDED BETWEEN THE COMPONENT AND ASSOCIATED DUCTWORK, PIPING, AND CONDUIT.

A. COMPONENTS WEIGHING LESS THAN 400 POUNDS AND HAVE A CENTER OF MASS LOCATED 4 FEET OR LESS ABOVE THE ADJACENT FLOOR OR ROOF LEVEL THAT DIRECTLY SUPPORT THE COMPONENT.
B. COMPONENTS WEIGHING LESS THAN 20 POUNDS, OR IN THE CASE OF DISTRIBUTED SYSTEMS, LESS THAN 5 POUNDS PER FOOT, WHICH ARE SUSPENDED FROM A ROOF OR FLOOR OR HUNG FROM A WALL.

FOR THOSE ELEMENTS THAT DO NOT REQUIRE DETAILS ON THE APPROVED DRAWINGS, THE INSTALLATION SHALL BE SUBJECT TO THE APPROVAL OF THE STRUCTURAL ENGINEER OF RECORD AND THE DSA DISTRICT STRUCTURAL ENGINEER. THE PROJECT INSPECTOR WILL VERIFY THAT ALL COMPONENTS AND EQUIPMENT HAVE BEEN ANCHORED IN ACCORDANCE WITH ABOVE REQUIREMENTS.

PIPING, DUCTWORK AND ELECTRICAL SYSTEM
BRACING OF

PIPING, DUCTWORK AND ELECTRICAL DISTRIBUTION SYSTEMS SHALL BE BRACED TO COMPLY WTTH THE FORCES AND DISPLACEMENTS PRESCRIBED IN ASCE 7-10 SECTION 13.3 AS DEFINED IN ASCE 7-10 SECTION 13.6.8, 13.6.7, 13.6.5.6 AND 2013 CBC SECTIONS 1615A.1.20, 1615A.1.21 AND 1615A.1.22.

THE BRACING AND ATTACHMENTS TO THE STRUCTURE SHALL BE DETAILED ON THE APPROVED DRAWINGS OR THEY SHALL COMPLY WITH ONE OF THE OSHPD PRE-APPROVALS (OPA #) AS MODIFIED TO SATISFY ANCHORAGE REQUIREMENTS OF ACI 318, APPENDIX D.

COPIES OF THE MANUAL SHALL BE AVAILABLE ON THE JOBSITE PRIOR TO THE START OF HANGING AN BRACING OF THE PIPE, DUCTWORK AND ELECTRICAL DISTRIBUTION SYSTEMS.

THE STRUCTURAL ENGINEER OF RECORD SHALL VERIFY THE ADEQUACY OF THE STRUCTURE TO SUPPORT THE HANGER AND BRACE LOADS.

7 1" = 1'-0"
8. EQUIPMENT ANCHORAGE3

FIRE ALARM NOTES

1. SMOKE AND HEAT DETECTOR CONDUIT AND DEVICES PROVIDED AND INTERCONNECTED BY OTHERS TO FIRE ALARM SYSTEM.
2. PROVIDE DEDICATED FIRE ALARM 120 VOLT CIRCUIT CONNECTED TO LOCKED-ON BREAKER. THE CIRCUIT BREAKER SHALL BE LOCKED-ON WITH APPROVED LOCKING DEVICE, MARKED RED AND IDENTIFIED AS "FIRE ALARM CONTROL CIRCUIT", NFPA 72, 10.6.5.2.

8 1" = 1'-0"
9. FIRE ALARM NOTES3

CONDUIT FILL AND CONDUCTOR CAPACITY TABLE

(ALL CONDUCTORS SHALL BE TYPE THHN/THWN 75 DEG. C. COPPER)

WIRE SIZE	CAPACITY	WIRE TYPE	NO. OF CONDUCTOR PERMITTED			
			1/2" C	3/4" C	1" C	1 1/4" C
#12	20A	THHN	9	16	25	45
#10	30A	THHN	5	10	16	28
#8	45A	THHN	2	5	8	14
#6	65A	THHN	1	3	5	10
#4	85A	THHN	1	2	4	7

9 1" = 1'-0"
10. CONDUIT FILL AND CONDUCTOR CAPACITY TABLE3

JUNCTION BOX SIZE TABLE

BOX	SIZE	CU. IN.	MAX NO. OF CONDUCTORS			
			#12	#10	#8	#6
4SS	1 1/4"x4" SQ	18.0	8	7	6	0
4S	1 1/2"x4" SQ	21.0	9	8	7	0
4SD	2 1/8"x4" SQ	30.3	13	12	10	6
4SX	2 7/8"x4" SQ	43.5	23	21	17	10
5SD	2 1/8"x4-11/16" SQ	42.0	18	16	14	6
5SX	3 7/8"x4-11/16" SQ	86.0	38	34	28	17
664	4"x6" SQ	144.0	64	57	48	28

* DEDUCT ONE CONDUCTOR FOR (1) OR MORE GROUNDING CONDUCTORS ENTERING THE BOX

10 1" = 1'-0"
11. JUNCTION BOX SIZE TABLE3

LEGEND

L-1 2x4 CEILING LIGHT WITH (3) T-8 LAMPS, LAY-IN FLUORESCENT LIGHT FIXTURE WITH DIMMABLE BALLAST ORACLE LIGHTING MODEL: 24-OT-3-32-T8-A12-L41K-C4 WATTAGE: 79W (3 LAMPS/32W/T8) OR EQUAL

L-2 32W 2-2X4 LED RF QC 4000K LED LIGHT FIXTURE, DIMMABLE

2x4 CEILING LIGHT WITH (3) T-8 LAMPS, LAY-IN FLUORESCENT LIGHT FIXTURE WITH DIMMABLE BALLAST ORACLE LIGHTING MODEL: 24-OT-3-32-T8-EMG-T8-BX-600-A12-L41K-C4 WATTAGE: 79W (3 LAMPS/32W/T8) OR EQUAL
EACH LIGHT FIXTURE WHICH IS INDICATED AS BEING AN EMERGENCY LIGHT SHALL HAVE A BALLAST BATTERY PACK INSTALLED ON THE FIXTURE. THE BATTERY PACK SHALL PROVIDE POWER TO A SINGLE LAMP WITHIN THE FIXTURE FOR NO LESS THAN 90 MINUTES. ANY LIGHT FIXTURE EQUIPPED WITH A BATTERY PACK SHALL BE WIRED IN SUCH A MANNER THAT THE BATTERY WILL BE ACTIVATED IMMEDIATELY UPON LOSS OF POWER TO THE FIXTURE. ADDITIONALLY THE BATTERY PACK SHALL BE OPERATED USING BATTERY POWER LIGHTING CONTROL SWITCHES AND SENSORS SHALL NOT BE ABLE TO SHUT THE FIXTURE OFF.

OS — CEILING MOUNTED OCCUPANCY SENSOR.
WATTSTOPPER #LMPC-100 OR EQUAL.

PC — CEILING MOUNTED PHOTOCELL, WATTSTOPPER #LMLS-500 OR EQUAL

US — ULTRASONIC CEILING OCCUPANCY SENSOR.
WATTSTOPPER W-500A OR EQUAL. SENSOR TO BE CONNECTED TO KEYED LIGHT SWITCHES FOR MANUAL OVERRIDE AND USE FOR RESTROOM W/ PARTITIONS.

WS-1 — SINGLE SWITCH WALL OCCUPANCY SENSOR.
WATTSTOPPER PW-100 OR EQUAL. SENSOR TO BE MOUNTED
AT +44" AFF AND USE FOR OPEN ROOM (OR RESTROOM) LESS THAN 100 SQ FT W/ (1) CIRCUIT.

RC — LIGHTING MANAGEMENT SYSTEM ROOM CONTROLLER, INSTALLED ABOVE CEILING, LOCATION AND # OF LOADS/ZONES TO BE VERIFIED WATTSTOPPER #LMRC-2XX OR EQUAL

$ D — SINGLE BUTTON DIMMER SWITCH, AT +48" AFF, TO TOP OF SWITCH BOX, WATTSTOPPER #LMDM-101 OR EQUAL

$ — LIGHT SWITCH. MOUNT AT+48" AFF TO TOP OF SWITCH BOX

$ 3 — 3-WAY LIGHT SWITCH. MOUNT AT+48" AFF TO TOP OF SWITCH BOX

DUPLEX (WALL MOUNTED) RECEPTACLE 15A-125V-3 WIRE. MOUNT AT +18" AFF U.O.N. TO CENTERLINE OF DEVICE

WP — EXTERIOR WEATHER PROOF GFI RECEPTACLE AT +24" AFF FOR A/C SERVICES (MAX 25'-0" FROM UNITS)

GFI — GROUND FAULT CIRCUIT INTERRUPT RECEPTACLE WITHIN 6'-0" OF ALL SINKS

R — ROOF MOUNTED WEATHER PROOF GFI RECEPTACLE

MIN. +15" TO BOTTOM OF BOX

EXTERIOR LED LIGHT FIXTURE. 30w MAX WITH PHOTOCELL MOUNT AT +93" AFF

CLOCK OUTLET AT +90" AFF TO CENTERLINE OF DEVICE

EXIT — EXIT SIGN WITH BATTERY BACK UP. EXIT SIGN REQUIRED FOR CLASSROOMS WITH TWO OR MORE EXTERIOR DOORS. CLASSROOMS WITH ONE EXTERIOR DOOR-OPTIONAL.

4SD J-BOX FOR FIRE ALARM PULLSTATION (DEVICE BY OTHERS). MOUNT AT +48" AFF TO TOP OF CONTROL BOX WITH 3/4" CONDUIT TO FIRE ALARM STROBE WITH PULLSTRING

4SD J-BOX FOR FIRE ALARM STROBE (DEVICE BY OTHERS). BOTTOM OF LENS SHALL BE 80" MIN & TOP OF LENS 96" MAX AND AT LEAST 6" BELOW THE CEILING LINE WITH 3/4" CONDUIT TO EXTERIOR FIRE ALARM HORN WITH PULLSTRING

H — 4SD J-BOX FOR EXTERIOR FIRE ALARM HORN (DEVICE BY OTHERS). MOUNT AT +90" AFF TO TOP OF DEVICE WITH 3/4" CONDUIT STUBBED TO ATTIC WITH PULLSTRING

RECESSED 4SD J-BOX W/ COVER PLATE FOR FUTURE FIRE ALARM SYSTEM BY OTHERS. MOUNT AT +18" AFF U.O.N. TO CENTERLINE OF BOX AND PROVIDE 1" CO STUB TO ATTIC SPACE WITH PULLSTRING

S — 4SD J-BOX IN ATTIC FOR CEILING MOUNTED SMOKE DETECTOR (DEVICE BY OTHERS). MAXIMUM 21'-0" FROM ANY POINT IN ROOM AND 30'-0" BETWEEN THEM. PROVIDE A 6'-O" CONDUIT FROM EACH J-BOX TO SMOKE DETECTOR LOCATION. CONDUIT & CONNECTION TO CEILING DEVICE & DEVICE BY OTHERS (ALARM NOTE #1)

H — 4SD J-BOX IN ATTIC FOR ATTIC MOUNTED HEAT DETECTOR (DEVICE BY OTHERS). MAXIMUM 35'-0" FROM ANY POINT IN ATTIC AND 50'-0" BETWEEN THEM. PROVIDE A 6'-0" CONDUIT FROM EACH J-BOX TO HEAT DETECTOR LOCATION. CONDUIT & CONNECTION TO CEILING DEVICE & DEVICE BY OTHERS (ALARM NOTE #1)

WH — 4SD J-BOX FOR WATER HEATER LOCATE ABOVE CEILING W/ COVER PLATE, HARD WIRE TO UNIT

100 CFM CEILING MOUNTED EXHAUST FAN. INTERLOCKED WITH LIGHT SWITCH

WALL MOUNTED HVAC UNIT, SEE MECHANICAL DWGS

ROOF MOUNTED HVAC UNIT-SEE MECHANICAL DWGS

ELECTRICAL PANEL AT +60" AFF TO TOP OF ELECTRICAL PANEL WITH 1 1/2" DIA POWER STUB OUT

11 1" = 1'-0"
13. LEGEND

IDENTIFICATION STAMP
DIV. OF THE STATE ARCHITECT
APP: 01-119031 INC:
REVIEWED FOR
SS ☑ FLS ☑ ACS ☑
DATE: 10/22/2020

PROFESSIONAL STAMP

REGISTERED PROFESSIONAL ENGINEER
No. S3380
STRUCTURAL
STATE OF CALIFORNIA
11.28.2018

THE PLANS, IDEAS & DESIGNS SHOWN ON THESE DRAWINGS ARE THE PROPERTY OF R&S TAVARES ASSOCIATES, INC. DEVISED SOLELY FOR THIS CONTRACT. THESE PLANS SHALL NOT BE USED, IN WHOLE OR IN PART, FOR ANY PURPOSE FOR WHICH THEY WERE NOT INTENDED WITHOUT THE EXPRESS WRITTEN CONSENT OF R&S TAVARES ASSOCIATES, INC. ©

CLIENT
CLASS LEASING LLC
1221 Harley Knox Boulevard
Perris, CA 92571

ORIGINAL PC STATE AGENCY APPROVAL
FILE NUMBER: PC-128
IDENTIFICATION STAMP
DIVISION OF THE STATE ARCHITECT
APP. NO: 04 - 116501 INCR :
AC RM FLS RF SS KR
DATE 2/13/2019

PROJECT TITLE
12' x 40'

PROJECT SPECIFIC STATE AGENCY APPROVAL

Revision Schedule

#	Description	Date

SHEET TITLE
ELECTRICAL GENERAL NOTES

PROJECT NUMBER
17030

DRAWN BY
rMc

CHECKED BY
RT

DATE
11.28.2018

SHEET NO.
E0.1

SHEET OF SHEETS

Proprietary Property of Class Leasing
Proprietary Property of Class Leasing
Proprietary Property of Class Leasing
Proprietary Property of Class Leasing
C:\Users\Cesar\Documents\17030 - Aries, 12x40 Moment Frame PC - MainFile.rvt 04.11.18_Cesar.rvt
5/4/2018 8:37:37 AM

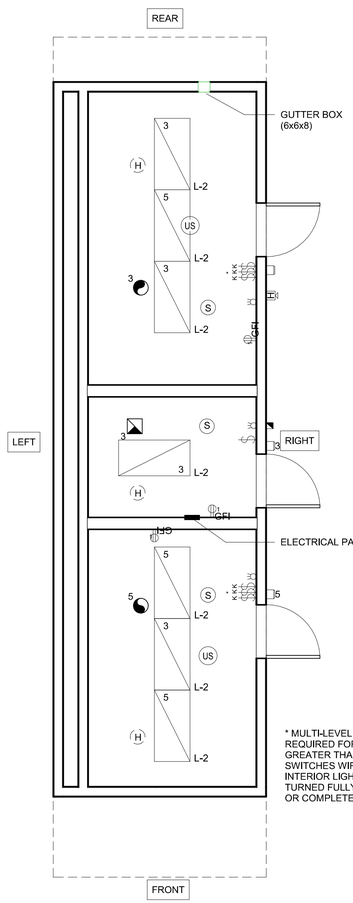

11 *1/4" = 1'-0"*
12x40 Option 2 (A) Electrical Plan

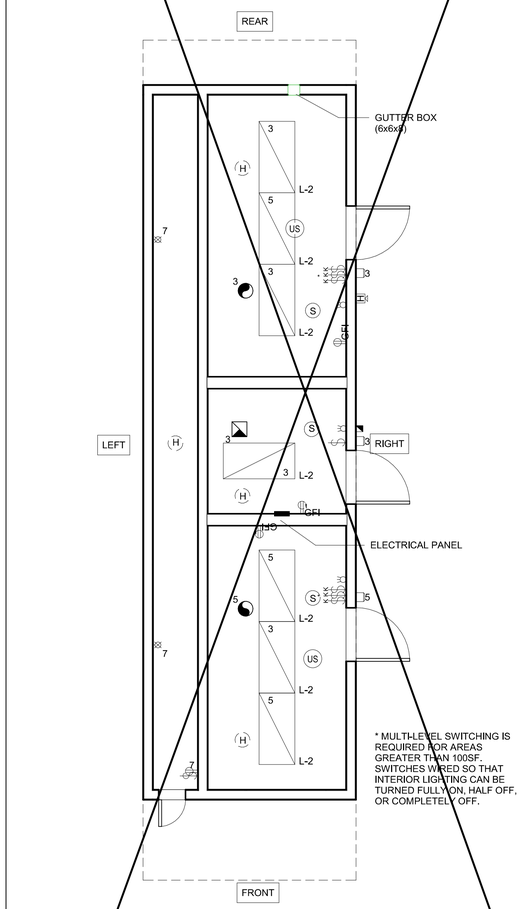

12 *1/4" = 1'-0"*
12x40 Option 2 (B) Electrical Plan

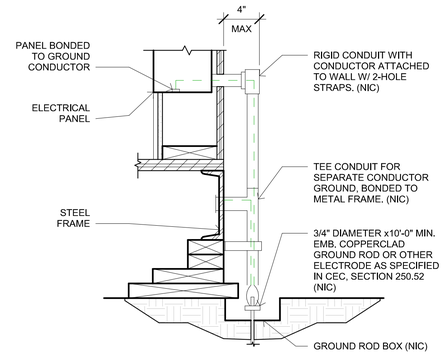

NOTES:

1. SIZE OF CONDUCTORS SHALL COMPLY WITH CEC TABLE 250.66
2. ELEC. TRADE SHALL CHECK AREA FOR EXISTING CONDUITS, SEWER, GAS & WATER PIPING BEFORE DRIVING GROUND RODS.
3. BOND SEPARATE CONDUCTORS FROM GROUND ROD TO ELEC'L. PANEL & TO METAL BUILDING FRAME (CEC 250.52) IN ADDITION TO THE DETAIL SHOWN ABOVE. BOND THE ELECTRICAL GROUND TO METAL UNDERGROUND WATER PIPE IN DIRECT CONTACT WITH THE EARTH FOR 10 FT. OR MORE, IF AVAILABLE (CEC 250.52)
4. ALL MODULES OF STEEL FRAME BLDGS. SHALL BE ELECTRICALLY BONDED TOGETHER (BOLTING ONLY IS NOT ACCEPTABLE BONDING). BONDING SHALL INCLUDE METAL RAMP & STAIRS.
5. CHECK RESISTANT TO GROUND ROD. IF RESISTANCE EXCEEDS 25 OHMS. INSTALL ADDITIONAL GROUND RODS WITH CONDUCTORS AS SHOWN SEPARATED AT LEAST 6'-0" UNTIL RESISTANCE IS REDUCED TO 25 OHMS OR LESS (CEC 250.56).

2 *1 1/2" = 1'-0"*
2. TYPICAL GROUNDING DETAIL1

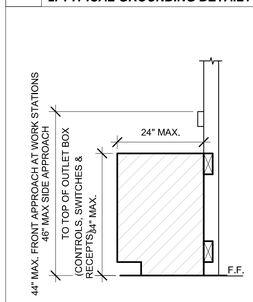

OVER OBSTRUCTION

3 *1" = 1'-0"*
3. OVER OBSTRUCTION1

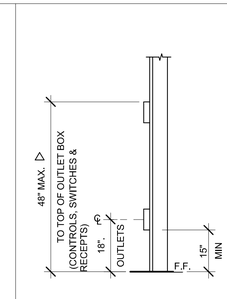

ELECTRICAL MOUNTING HEIGHTS

4 *1" = 1'-0"*
4. ELECTRICAL MOUNTING HEIGHTS1

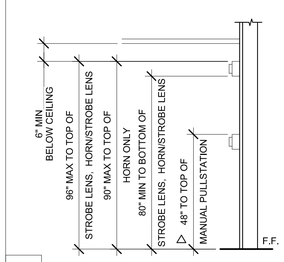

△ PROVIDE MIN 30"x48" CLR FLOOR SPACE FOR PERPENDICULAR APPROACH AT EACH LOCATION

5 *1" = 1'-0"*
5. FIRE ALARM MOUNTING HEIGHTS1

GENERAL GROUNDING NOTES

EACH BUILDING SHALL BE SEPARATELY GROUNDED WITH A 3/4" RD.x 8' COPPERCLAD STEEL GROUND ROD, WHERE ROCK BOTTOM IS ENCOUNTERED, ROD SHALL BE DRIVEN AT AN ANGLE NOT TO EXCEED 45 DEGREE'S FROM THE VERTICAL OR SHALL BE BURIED IN A TRENCH THAT IS AT LEAST 30" DEEP (BY SITE ELECTRICAL).

TESTING: TEST FOR RESISTANCE TO GROUND, IF RESISTANCE EXCEEDS 25 OHMS, INSTALL ADDITIONAL GROUND RODS SEPARATED AT LEAST 6'-0" UNTIL RESISTANCE IS REDUCES TO 25 OHMS OR LESS, (BY SITE ELECTRICAL).

APPROVAL OF THIS PLAN DOES NOT CONSTITUTE APPROVAL OF THIS FIRE ALARM FOR ALL SITES. THE FIRE ALARM SYSTEM AND/OR COMPONENTS MAYBE REQUIRED TO BE CHANGED DUE TO SITE LOCATION EXISTING CONDITIONS OR INCOMPATIBLE COMPONENTS.

GROUND MG TEST SHALL BE DONE IN THE PRESENCE OF THE PROJECT INSPECTOR. ALL GROUNDING SHALL BE IN ACCORDANCE WITH CEC ARTICLE 250.

6 *1" = 1'-0"*
6. GENERAL GROUNDING NOTES1

EQUIPMENT ANCHORAGE

ALL MECHANICAL, PLUMBING AND ELECTRICAL COMPONENTS SHALL BE ANCHORED AND INSTALLED PER THE DETAILS ON THE DSA APPROVED CONSTRUCTION DOCUMENTS. WHERE NO DETAIL IS INDICATED, THE FOLLOWING COMPONENTS SHALL BE ANCHORED OR BRACED TO MEET THE FORCE AND DISPLACEMENT REQUIREMENTS PRESCRIBED IN THE 2013 CBC, SECTIONS 1615A.1.12 THROUGH 1615A.1.22 AND ASCE 7-10 CHAPTER 13 AND 26.

1. ALL PERMANENT EQUIPMENT AND COMPONENTS.
2. TEMPORARY OR MOVABLE EQUIPMENT THAT IS PERMANENTLY ATTACHED (E.G. HARD WIRED) TO THE BUILDING UTILITY SERVICES SUCH AS ELECTRICITY, GAS OR WATER.
3. MOVABLE EQUIPMENT WHICH IS STATIONED IN ONE PLACE FOR MORE THAN 8 HOURS AND HEAVIER THAN 400 POUNDS ARE REQUIRED TO BE ANCHORED WITH TEMPORARY ATTACHMENTS.

THE ATTACHMENT OF THE FOLLOWING MECHANICAL AND ELECTRICAL COMPONENTS SHALL BE POSITIVELY ATTACHED TO THE STRUCTURE, BUT NEED NOT BE DETAILED ON THE PLANS. THESE COMPONENTS SHALL HAVE FLEXIBLE CONNECTIONS PROVIDED BETWEEN THE COMPONENT AND ASSOCIATED DUCTWORK, PIPING, AND CONDUIT.

A. COMPONENTS WEIGHING LESS THAN 400 POUNDS AND HAVE A CENTER OF MASS LOCATED 4 FEET OR LESS ABOVE THE ADJACENT FLOOR OR ROOF LEVEL THAT DIRECTLY SUPPORT THE COMPONENT.
B. COMPONENTS WEIGHING LESS THAN 20 POUNDS, OR IN THE CASE OF DISTRIBUTED SYSTEMS, LESS THAN 5 POUNDS PER FOOT, WHICH ARE SUSPENDED FROM A ROOF OR FLOOR OR HUNG FROM A WALL.

FOR THOSE ELEMENTS THAT DO NOT REQUIRE DETAILS ON THE APPROVED DRAWINGS, THE INSTALLATION SHALL BE SUBJECT TO THE APPROVAL OF THE STRUCTURAL ENGINEER OF RECORD AND THE DSA DISTRICT STRUCTURAL ENGINEER. THE PROJECT INSPECTOR WILL VERIFY THAT ALL COMPONENTS AND EQUIPMENT HAVE BEEN ANCHORED IN ACCORDANCE WITH ABOVE REQUIREMENTS.

PIPING, DUCTWORK AND ELECTRICAL SYSTEM BRACING OF

PIPING, DUCTWORK AND ELECTRICAL DISTRIBUTION SYSTEMS SHALL BE BRACED TO COMPLY WTTH THE FORCES AND DISPLACEMENTS PRESCRIBED IN ASCE 7-10 SECTION 13.3 AS DEFINED IN ASCE 7-10 SECTION 13.6.8, 13.6.7, 13.6.5.6 AND 2013 CBC SECTIONS 1615A.1.20, 1615A.1.21 AND 1615A.1.22.

THE BRACING AND ATTACHMENTS TO THE STRUCTURE SHALL BE DETAILED ON THE APPROVED DRAWINGS OR THEY SHALL COMPLY WITH ONE OF THE OSHPD PRE-APPROVALS (OPA #) AS MODIFIED TO SATISFY ANCHORAGE REQUIREMENTS OF ACI 318, APPENDIX D.

COPIES OF THE MANUAL SHALL BE AVAILABLE ON THE JOBSITE PRIOR TO THE START OF HANGING AN BRACING OF THE PIPE, DUCTWORK AND ELECTRICAL DISTRIBUTION SYSTEMS.

THE STRUCTURAL ENGINEER OF RECORD SHALL VERIFY THE ADEQUACY OF THE STRUCTURE TO SUPPORT THE HANGER AND BRACE LOADS.

7 *1" = 1'-0"*
8. EQUIPMENT ANCHORAGE1

FIRE ALARM NOTES

1. SMOKE AND HEAT DETECTOR CONDUIT AND DEVICES PROVIDED AND INTERCONNECTED BY OTHERS TO FIRE ALARM SYSTEM.
2. PROVIDE DEDICATED FIRE ALARM 120 VOLT CIRCUIT CONNECTED TO LOCKED-ON BREAKER. THE CIRCUIT BREAKER SHALL BE LOCKED-ON WITH APPROVED LOCKING DEVICE, MARKED RED AND IDENTIFIED AS "FIRE ALARM CONTROL CIRCUIT", NFPA 72, 10.6.5.2.

8 *1" = 1'-0"*
9. FIRE ALARM NOTES1

CONDUIT FILL AND CONDUCTOR CAPACITY TABLE

(ALL CONDUCTORS SHALL BE TYPE THHN/THWN 75 DEG. C. COPPER)

WIRE SIZE	CAPACITY	WIRE TYPE	NO. OF CONDUCTOR 1/2" C	3/4" C	1" C	1 1/4" C
#12	20A	THHN	9	16	25	45
#10	30A	THHN	5	10	16	28
#8	45A	THHN	2	5	8	14
#6	65A	THHN	1	3	5	10
#4	85A	THHN	1	2	4	7

9 *1" = 1'-0"*
10. CONDUIT FILL AND CONDUCTOR CAPACITY TABLE1

JUNCTION BOX SIZE TABLE

BOX	SIZE	CU. IN.	MAX NO. OF CONDUCTORS #12	#10	#8	#6
4SS	1 1/4"x4" SQ	18.0	8	7	6	0
4S	1 1/2"x4" SQ	21.0	9	8	7	0
4SD	2 1/8"x4" SQ	30.3	13	12	10	6
4SX	2 7/8"x4" SQ	43.5	23	21	17	10
5SD	2 1/8"x4-11/16" SQ	42.0	18	16	14	6
5SX	3 7/8"x4-11/16" SQ	86.0	38	34	28	17
664	4"x6" SQ	144.0	64	57	48	28

* DEDUCT ONE CONDUCTOR FOR (1) OR MORE GROUNDING CONDUCTORS ENTERING THE BOX

10 *1" = 1'-0"*
11. JUNCTION BOX SIZE TABLE1

IDENTIFICATION STAMP
DIV. OF THE STATE ARCHITECT
APP: 01-119031 INC:
REVIEWED FOR
SS ☑ FLS ☑ ACS ☑
DATE: 10/22/2020

PROFESSIONAL STAMP

REGISTERED PROFESSIONAL ENGINEER
DANNY D. RAMIREZ
No. S3380
STRUCTURAL
STATE OF CALIFORNIA
11.28.2018

THE PLANS, IDEAS & DESIGNS SHOWN ON THESE DRAWINGS ARE THE PROPERTY OF R&S TAVARES ASSOCIATES, INC. DEVISED SOLELY FOR THIS CONTRACT. THESE PLANS SHALL NOT BE USED, IN WHOLE OR IN PART, FOR ANY PURPOSE FOR WHICH THEY WERE NOT INTENDED WITHOUT THE EXPRESS WRITTEN CONSENT OF R&S TAVARES ASSOCIATES, INC. ©

CLIENT

CLASS LEASING LLC
1221 Harley Knox Boulevard
Perris, CA 92571

ORIGINAL PC STATE AGENCY APPROVAL

FILE NUMBER: PC-128
IDENTIFICATION STAMP
DIVISION OF THE STATE ARCHITECT
APP. NO: 04 - 116501 INCR :
AC RM FLS RF SS KR
DATE 2/13/2019

PROJECT TITLE
12' x 40'

PROJECT SPECIFIC STATE AGENCY APPROVAL

Revision Schedule

#	Description	Date

SHEET TITLE
12x40 ELECTRICAL PLAN OPTION 2 (A) (B)

PROJECT NUMBER
17030

DRAWN BY
rMc

CHECKED BY
RT

DATE
11.28.2018

SHEET NO.
E1.2
SHEET OF SHEETS

Proprietary Property of Class Leasing
Proprietary Property of Class Leasing
Proprietary Property of Class Leasing

5/4/2018 8:37:51 AM C:\Users\Cesar\Documents\17030 - Aries, 12x40 Moment Frame PC - MainFile.rvt 04.11.18_Cesar.rvt

PANEL: PNL"A" MAIN : MLO A.I.C. 10,000 A VOLT : 120/240, 1 Ø, 3W

NEMA: 1 BUS : 100 A M.T.G. Recessed # CIRCUITS: 12

CIR	PH	AMP	MSC	C/O	LTS	VOLT-AMPS LOAD BUS A	VOLT-AMPS LOAD BUS B	LOCATION & REMARKS	LOCATION & REMARKS	VOLT-AMPS LOAD BUS A	VOLT-AMPS LOAD BUS B	LTS	C/O	MSC	AMP	PH	CIR
1	1	20		6		1080		INT. RECEPTACLES - LEFT	HVAC	7360					60	2	2
3	1	20		5			900	INT. RECEPTACLES - RIGHT			7360				-	-	4
5	1	20			2	360		EXT. RECEPTACLES	FIRE ALARM / S & H DET.	40					20	1	6
7	1	20			7		606	INT./EXT. LIGHTING	SPACE						-	-	8
9	-	-						SPACE	SPACE						-	-	10
11	-	-						SPACE	SPACE						-	-	12

CONNECTED V.A. :	A: 8,840	B: 8,868	TOTAL:	17,706	
CONNECTED V.A. W/L.C.L. :	A: 8,930	B: 9,018	TOTAL W/LCL:	17,948	
CONT. LOADS : 966	NON-CONT. LOADS:	16,740	TOTAL AMPS :	74	HIGH ϕ AMPS W/LCL : 75

* AFCI circuit breaker on 15- and 20-ampere branch circuits supplying outlets or devices

2 *1" = 1'-0"*
ELECTRICAL PANEL_ROOF MOUNTED

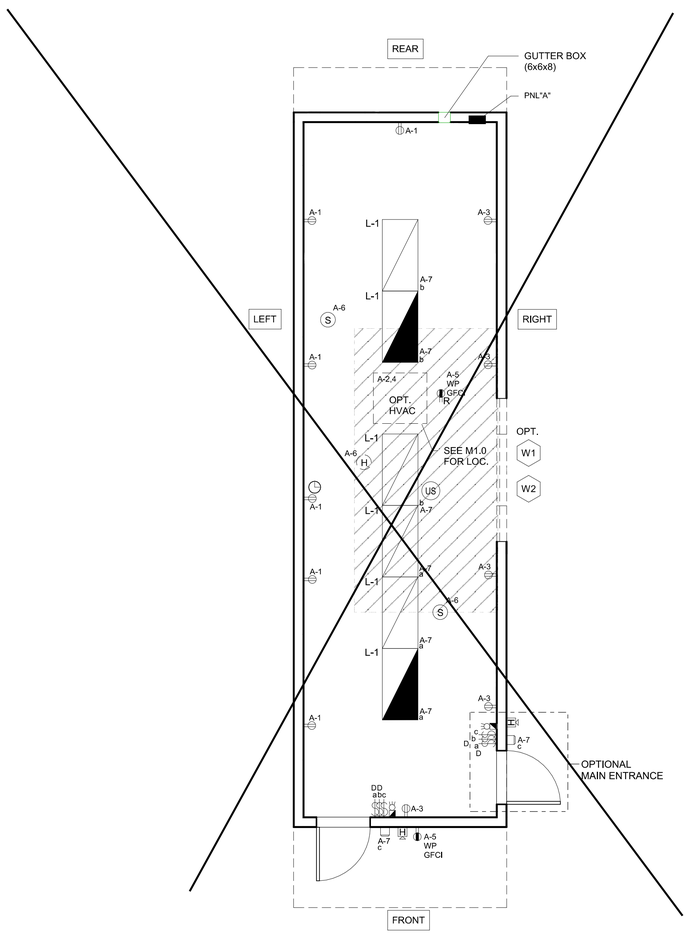

PRIMARY SIDELIT ZONE

* MULTI-LEVEL SWITCHING IS REQUIRED FOR AREAS GREATER THAN 100SF. SWITCHES WIRED SO THAT INTERIOR LIGHTING CAN BE TURNED FULLY ON, HALF OFF, OR COMPLETELY OFF.

1 *1/4" = 1'-0"*
12x40 Work Room Electrical Plan_ROOF HVAC

PANEL: PNL"A" MAIN : MLO A.I.C. 10,000 A VOLT : 120/240, 1 Ø, 3W

NEMA: 1 BUS : 100 A M.T.G. Recessed # CIRCUITS: 12

CIR	PH	AMP	MSC	C/O	LTS	VOLT-AMPS LOAD BUS A	VOLT-AMPS LOAD BUS B	LOCATION & REMARKS	LOCATION & REMARKS	VOLT-AMPS LOAD BUS A	VOLT-AMPS LOAD BUS B	LTS	C/O	MSC	AMP	PH	CIR
1	1	20		6		1080		INT. RECEPTACLES - LEFT	HVAC	6670					60	2	2
3	1	20		5		900		INT. RECEPTACLES - RIGHT			6670				-	-	4
5	1	20			2		360	EXT. RECEPTACLES	FIRE ALARM / S & H DET.	40					20	1	6
7	1	20			7		606	INT./EXT. LIGHTING	SPACE						-	-	8
9	-	-						SPACE	SPACE						-	-	10
11	-	-						SPACE	SPACE						-	-	12

CONNECTED V.A. :	A: 8,690	B: 7,636	TOTAL:	16,326	
CONNECTED V.A. W/L.C.L. :	A: 8,690	B: 7,788	TOTAL W/LCL:	16,478	
CONT. LOADS : 606	NON-CONT. LOADS:	15,720	TOTAL AMPS :	68	HIGH ϕ AMPS W/LCL : 72

* AFCI circuit breaker on 15- and 20-ampere branch circuits supplying outlets or devices

4 *1" = 1'-0"*
ELECTRICAL PANEL_WALL MOUNTED

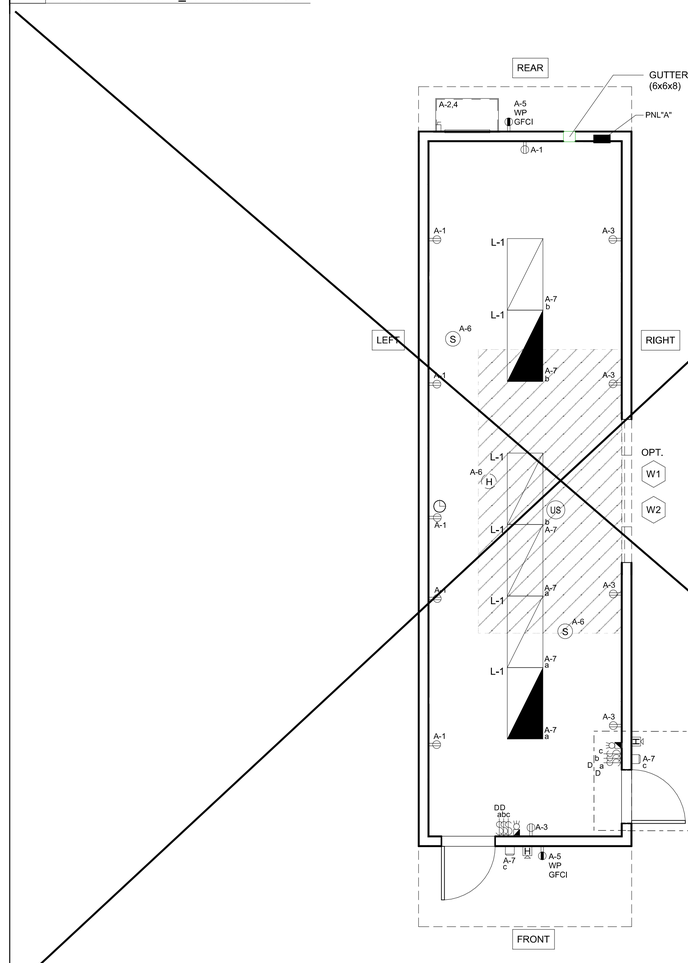

PRIMARY SIDELIT ZONE

* MULTI-LEVEL SWITCHING IS REQUIRED FOR AREAS GREATER THAN 100SF. SWITCHES WIRED SO THAT INTERIOR LIGHTING CAN BE TURNED FULLY ON, HALF OFF, OR COMPLETELY OFF.

3 *1/4" = 1'-0"*
12x40 Work Room Electrical Plan _WALL HVAC

IDENTIFICATION STAMP
DIV. OF THE STATE ARCHITECT
APP: 01-119031 INC:
REVIEWED FOR
SS ☑ FLS ☑ ACS ☑
DATE: 10/22/2020

PROFESSIONAL STAMP

REGISTERED PROFESSIONAL ENGINEER
RAMAY D. RASH
No. S3380
STRUCTURAL
STATE OF CALIFORNIA

11.28.2018

THE PLANS, IDEAS & DESIGNS SHOWN ON THESE DRAWINGS ARE THE PROPERTY OF R&S TAVARES ASSOCIATES, INC. DEVISED SOLELY FOR THIS CONTRACT. THESE PLANS SHALL NOT BE USED, IN WHOLE OR IN PART, FOR ANY PURPOSE FOR WHICH THEY WERE NOT INTENDED WITHOUT THE EXPRESS WRITTEN CONSENT OF R&S TAVARES ASSOCIATES, INC. ©

CLIENT

CLASS LEASING LLC
1221 Harley Knox Boulevard
Perris, CA 92571

ORIGINAL PC STATE AGENCY APPROVAL

FILE NUMBER: PC-128
IDENTIFICATION STAMP
DIVISION OF THE STATE ARCHITECT
APP. NO: 04 - 116501 INCR :
AC RM FLS RF SS KR
DATE 2/13/2019

PROJECT TITLE
12' x 40'

PROJECT SPECIFIC STATE AGENCY APPROVAL

Revision Schedule

#	Description	Date

SHEET TITLE
12x40 ELECTRICAL PLAN WORK ROOM AND ELECTRICAL PANEL SCHEDULE

PROJECT NUMBER
17030

DRAWN BY
AM

CHECKED BY
RT

DATE
11.28.2018

SHEET NO.
E1.4

SHEET OF SHEETS

Proprietary Property of Class Leasing
Proprietary Property of Class Leasing

5/4/2018 8:38:02 AM C:\Users\Cesar\Documents\17030 - Aries, 12x40 Moment Frame PC - MainFile.rvt 04.11.18_Cesar.rvt

STATE OF CALIFORNIA
INDOOR LIGHTING
CEC-NRCC-LTI-01-E (Revised 04/16) — CALIFORNIA ENERGY COMMISSION

CERTIFICATE OF COMPLIANCE	NRCC-LTI-01-E
Indoor Lighting	(Page 1 of 6)
Project Name: 12'x40' - SW/MF (PC 04-116500) Restroom Module	Date Prepared: 10/19/2018

A. General Information

Climate Zone:	16	Conditional Floor Area:					
		Unconditioned Floor Area: 480					
Building Type:		☑	Nonresidential	☐	High-Rise Residential	☐	Hotel/Motel
☐ Schools		☐	Relocatable Public Schools	☐	Conditioned Spaces	☑	Unconditioned Spaces
Phase of Construction:		☑	New Construction	☐	Addition	☐	Alteration
Method of Compliance:		☑	Complete Building	☐	Area Category	☐	Tailored
Project Address:							

B. Lighting Compliance Documents (select yes for each document included)

For detailed instructions on the use of this and all Energy Efficiency Standards compliance documents, refer to the Nonresidential Manual published by the California Energy Commission.

YES	NO	COMP. DOC.	TITLE
◉	○	NRCC-LTI-01-E	Certificate of Compliance. All Pages required on plans for all submittals.
◉	○	NRCC-LTI-02-E	Lighting Controls, Certificate of Compliance, and PAF Calculation. All Pages required on plans for all submittals.
◉	○	NRCC-LTI-03-E	Indoor Lighting Power Allowance
○	◉	NRCC-LTI-04-E	Tailored Method Worksheets
○	◉	NRCC-LTI-05-E	Line Voltage Track Lighting Worksheets
○	◉	NRCC-LTI-06-E	Indoor Lighting Existing Conditions

STATE OF CALIFORNIA
INDOOR LIGHTING
CEC-NRCC-LTI-01-E (Revised 04/16) — CALIFORNIA ENERGY COMMISSION

CERTIFICATE OF COMPLIANCE	NRCC-LTI-01-E
Indoor Lighting	(Page 2 of 6)
Project Name: 12'x40' - SW/MF (PC 04-116500) Restroom Module	Date Prepared: 10/19/2018

C. Summary of Allowed Lighting Power

Conditioned and Unconditioned space Lighting must not be combined for compliance

	Indoor Lighting Power for Conditioned Spaces		Watts	Indoor Lighting Power for Unconditioned Spaces		Watts
01	**Installed** Lighting NRCC-LTI-01-E, Table H, page 5	+		**Installed** Lighting NRCC-LTI-01-E, Table H, page 5	+	224
02	Portable Only for Offices NRCC-LTI-01-E, Table G, page 4	+				
03	Minus Lighting Control Credits NRCC-LTI-02-E, page 2	-		Minus Lighting Control Credits NRCC-LTI-02-E, page 2	-	
04	Adjusted **Installed** Lighting Power (row 1 plus row 2 minus row 3)	=	0	Adjusted **Installed** Lighting Power (row 1 minus row 3)	=	224
	Complies ONLY if **Installed** ≤ **Allowed** (Box 04 < Box 05)			Complies ONLY if **Installed** ≤ **Allowed** (Box 04 < Box 05)		
05	**Allowed** Lighting Power Conditioned NRCC-LTI-03-E, page 1 Alterations with replacement luminaires that have at least 50/35%lower power compared to the original existing luminaires, may instead use the allowed wattage from NRCC-LTI-06, page 2			**Allowed** Lighting Power Unconditioned NRCC-LTI-03-E, page 1 Alterations with replacement luminaires that have at least 50/35% lower power compared to the original existing luminaires, may instead use the allowed wattage from NRCC-LTI-06, page 2		288

D. Declaration of Required Certificates of Installation

Declare by selecting yes for all of the Certificates that will be submitted. (Retain copies and verify forms are completed and signed.)

YES	NO	Form/Title	
◉	○	NRCI-LTI-01-E - Must be submitted for all buildings	☐ Field Inspector
○	◉	NRCI-LTI-02-E - Must be submitted for a lighting control system, or for an Energy Management Control System (EMCS), to be recognized for compliance.	☐ Field Inspector
○	◉	NRCI-LTI-03-E - Must be submitted for a line-voltage track lighting integral current limiter, or for a supplementary overcurrent protection panel used to energize only line-voltage track lighting, to be recognized for compliance.	☐ Field Inspector
○	◉	NRCI-LTI-04-E - Must be submitted for two interlocked systems serving an auditorium, a convention center, a conference room, a multipurpose room, or a theater to be recognized for compliance.	☐ Field Inspector
○	◉	NRCI-LTI-05-E - Must be submitted for a Power Adjustment Factor (PAF) to be recognized for compliance.	☐ Field Inspector
○	◉	NRCI-LTI-06-E - Must be submitted for additional wattage installed in a video conferencing studio to be recognized for compliance.	☐ Field Inspector

STATE OF CALIFORNIA
INDOOR LIGHTING
CEC-NRCC-LTI-01-E (Revised 04/16) — CALIFORNIA ENERGY COMMISSION

CERTIFICATE OF COMPLIANCE	NRCC-LTI-01-E
Indoor Lighting	(Page 3 of 6)
Project Name: 12'x40' - SW/MF (PC 04-116500) Restroom Module	Date Prepared: 10/19/2018

E. Declaration of Required Certificates of Acceptance

Declare by selecting yes for all of the Certificates of Acceptance that will be submitted. (Retain copies and verify forms are completed and signed.)

YES	NO	FORM/TITLE	
○	○	NRCA-LTI-02-A - Must be submitted for occupancy sensors and automatic time switch controls.	☐ Field Inspector
○	◉	NRCA-LTI-03-A - Must be submitted for automatic daylight controls.	☐ Field Inspector
○	◉	NRCA-LTI-04-A - Must be submitted for demand responsive lighting controls.	☐ Field Inspector
○	◉	NRCA-LTI-05-A - Must be submitted for institutional tuning power adjustment factor (PAF).	

A Separate Lighting Schedule Must Be Filled Out for Conditioned and Unconditioned Spaces. Installed Lighting Power listed on this Lighting Schedule is only for: ☐ **CONDITIONED SPACE** ☑ **UNCONDITIONED SPACE**

F. Indoor Lighting Schedule and Field Inspection Energy Checklist

- ☐ The actual indoor lighting power listed on the next 2 pages includes all installed permanent and planned portable lighting systems.
- ☐ When Complete Building Method is used for compliance, list each different type of luminaire on separate lines.
- ☐ When Area Category Method or Tailored Method is used for compliance, list each different type of luminaire by each different function area on separate lines
- ☐ Also include track lighting in schedule, and submit the track lighting compliance document (NRCC-LTI-05-E) when line-voltage track lighting is installed.

STATE OF CALIFORNIA
INDOOR LIGHTING
CEC-NRCC-LTI-01-E (Revised 04/16) — CALIFORNIA ENERGY COMMISSION

CERTIFICATE OF COMPLIANCE	NRCC-LTI-01-E
Indoor Lighting	(Page 4 of 6)
Project Name: 12'x40' - SW/MF (PC 04-116500) Restroom Module	Date Prepared: 10/19/2018

G. Installed Portable Luminaires in Offices – Exception to Section 140.6(a)

- This section shall be filled out ONLY for portable luminaires in offices (As defined in §100.1). All other planned portable luminaires shall be documented on next page of this compliance document.
- This section is used to determine if greater than 0.3 watts of portable lighting is planned for any office
- Fill out a separate line for each different office. Small offices that are typical (having the same general and portable lighting) may be grouped together. This allowance shall not be traded between offices having different lighting systems.

Office Portable Luminaire Schedule	Office Installed Portable Luminaire W/ft²							Office Location	Field Inspector	
01	02	03	04	05	06	07	08	09	10	
Complete Luminaire Description (i.e., LED, under cabinet, furniture mounted direct/indirect)	Watts per Luminaire	Number of Luminaires	Installed portable luminaire watts in this office (G02 x G03)	Square Feet of this office	Watts per square foot (G04 / G05)	If G06 ≤ 0.3, enter zero; If G06 > 0.3, (G06-0.3)	(G05 x G07)	Identify Office area in which these portable luminaires are installed	Pass	Fail
			0				0		○	○
			0				0		○	○
			0				0		○	○
			0				0		○	○
			0				0		○	○
Total installed portable luminaire watts that are greater than 0.3 W/ft² per office:								Enter sum total of all pages into NRCC-LTI-01-E; Page 2		

STATE OF CALIFORNIA
INDOOR LIGHTING
CEC-NRCC-LTI-01-E (Revised 04/16) — CALIFORNIA ENERGY COMMISSION

CERTIFICATE OF COMPLIANCE	NRCC-LTI-01-E
Indoor Lighting	(Page 5 of 6)
Project Name: 12'x40' - SW/MF (PC 04-116500) Restroom Module	Date Prepared: 10/19/2018

A Separate Lighting Schedule Must Be Filled Out for Conditioned and Unconditioned Spaces. Installed Lighting Power listed on this Lighting Schedule is only for: ☐ **CONDITIONED SPACE** ☑ **UNCONDITIONED SPACE**

H. Indoor Lighting Schedule and Field Inspection Energy Checklist

Luminaire Schedule		Installed Watts					Location	Field Inspector [1]	
01	02	03	04		05	06	07	08	
Name or Item Tag	Complete Luminaire Description (i.e, 3 lamp fluorescent troffer, F32T8, one dimmable electronic ballast)	Watts per Luminaire	How watage was determined: CEC Default from NA8	How watage was determined: According to §130.0(c)	Number Luminaires	Total Installed Watts in this area (H03 xH05)	Primary Function area in which these luminaires are installed	Pass	Fail
L-2	32W 2-2x4 LED RF QC 4000K	32	☐	☑	7	224		○	○
			☐	☐		0		○	○
			☐	☐		0		○	○
			☐	☐		0		○	○
			☐	☐		0		○	○
			☐	☐		0		○	○
			☐	☐		0		○	○
			☐	☐		0		○	○
			☐	☐		0		○	○
				INSTALLED WATTS PAGE TOTAL:		224	Enter sum total of all pages into NRCC-LTI-01-E; Page 2		

STATE OF CALIFORNIA
INDOOR LIGHTING
CEC-NRCC-LTI-01-E (Revised 04/16) — CALIFORNIA ENERGY COMMISSION

CERTIFICATE OF COMPLIANCE	NRCC-LTI-01-E
Indoor Lighting	(Page 6 of 6)
Project Name: 12'x40' - SW/MF (PC 04-116500) Restroom Module	Date Prepared: 10/19/2018

DOCUMENTATION AUTHOR'S DECLARATION STATEMENT

1. I certify that this Certificate of Compliance documentation is accurate and complete.

Documentation Author Name: RALPH M. TAVARES	Documentation Author Signature:
Company: R&S TAVARES ASSOCIATES, INC.	Signature Date: 10/19/2018
Address: 11777 BERNARDO PLAZA CT. SUITE 105	CEA Certification Identification (if applicable):
City/State/Zip: SAN DIEGO, CA 92128	Phone: 858-444-3344 EXT 1801

RESPONSIBLE PERSON'S DECLARATION STATEMENT

I certify the following under penalty of perjury, under the laws of the State of California:
1. The information provided on this Certificate of Compliance is true and correct.
2. I am eligible under Division 3 of the Business and Professions Code to accept responsibility for the building design or system design identified on this Certificate of Compliance (responsible designer).
3. The energy features and performance specifications, materials, components, and manufactured devices for the building design or system design identified on this Certificate of Compliance conform to the requirements of Title 24, Part 1 and Part 6 of the California Code of Regulations.
4. The building design features or system design features identified on this Certificate of Compliance are consistent with the information provided on other applicable compliance documents, worksheets, calculations, plans and specifications submitted to the enforcement agency for approval with this building permit application.
5. I will ensure that a completed signed copy of this Certificate of Compliance shall be made available with the building permit(s) issued for the building, and made available to the enforcement agency for all applicable inspections. I understand that a completed signed copy of this Certificate of Compliance is required to be included with the documentation the builder provides to the building owner at occupancy.

Responsible Designer Name: MANNY D. FRISCH	Responsible Designer Signature:
Company: R&S TAVARES ASSOCIATES, INC.	Date Signed: 10/19/2018
Address: 11777 BERNARDO PLAZA CT. SUITE 105	License: S3380
City/State/Zip: SAN DIEGO, CA 91218	Phone: 858 444 3344 EXT 1810

STATE OF CALIFORNIA
INDOOR LIGHTING – LIGHTING CONTROLS
CEC-NRCC-LTI-02-E (Revised 04/17) — CALIFORNIA ENERGY COMMISSION

CERTIFICATE OF COMPLIANCE	NRCC-LTI-02-E
Indoor Lighting - Lighting Controls	(Page 1 of 3)
Project Name: 24'x40' - SW/MF (PC 04-116500)	Date Prepared: 10/19/2018

A. Mandatory Lighting Control Declaration Statements (Indicate if the measure applies by checking yes or no below.)

YES	NO	Control Requirements
◉	○	Lighting shall be controlled by self-contained lighting control devices which are certified to the Energy Commission according to the Title 20 Appliance Efficiency Regulations in accordance with Section 110.9.
◉	○	Lighting shall be controlled by a lighting control system or energy management control system in accordance with §110.9. An Installation Certificate shall be submitted in accordance with Section 130.4(b).
○	◉	One or more Track Lighting Integral Current Limiters shall be installed which have been certified to the Energy Commission in accordance with §110.9 and §130.0. Additionally, an Installation Certificate shall be submitted in accordance with Section 130.4(b).
○	◉	A Track Lighting Supplementary Overcurrent Protection Panel shall be installed in accordance with Section 110.9 and Section 130.0. Additionally, an Installation Certificate shall be installed in accordance with Section 130.4(b).
◉	○	All lighting controls and equipment shall comply with the applicable requirements in §110.9 and shall be installed in accordance with the manufacturer's instructions in accordance with Section 130.1.
◉	○	All luminaires shall be functionally controlled with manual ON and OFF lighting controls in accordance with Section 130.1(a).
○	◉	General lighting shall be separately controlled from all other lighting systems in an area. Floor and wall display, window display, case display, ornamental, and special effects lighting shall each be separately controlled on circuits that are 20 amps or less. When track lighting is used, general, display, ornamental, and special effects lighting shall each be separately controlled; in accordance with Section 130.1(a)4.
◉	○	The general lighting of any enclosed area 100 square feet or larger, with a connected lighting load that exceeds 0.5 watts per square foot shall meet the multi-level lighting control requirements in accordance with Section 130.1(b).
◉	○	All installed indoor lighting shall be equipped with controls that meet the applicable Shut-OFF control requirements in Section 130.1(c).
◉	○	Lighting in all Daylit Zones shall be controlled in accordance with the requirements in Section 130.1(d) and daylit zones are shown on the plans.
○	◉	Lighting power in buildings larger than 10,000 square feet shall be capable of being automatically reduced in response to a Demand Responsive Signal in accordance with Section 130.1(e).
◉	○	Before an occupancy permit is granted for a newly constructed building or area, or a new lighting system serving a building, area, or site is operated for normal use, indoor lighting controls serving the building, area, or site shall be certified as meeting the Acceptance Requirements for Code Compliance in accordance with Section 130.4.(a). The controls required to meet the Acceptance Requirements include automatic daylight controls, automatic shut-OFF controls, and demand responsive controls.

STATE OF CALIFORNIA
INDOOR LIGHTING – LIGHTING CONTROLS
CEC-NRCC-LTI-02-E (Revised 04/17) — CALIFORNIA ENERGY COMMISSION

CERTIFICATE OF COMPLIANCE	NRCC-LTI-02-E
Indoor Lighting - Lighting Controls	(Page 2 of 3)
Project Name: 24'x40' - SW/MF (PC 04-116500)	Date Prepared: 10/19/2018

A separate document must be filled out for Conditioned and Unconditioned Spaces. This page is used only for the following:
☐ CONDITIONED SPACES ☑ UNCONDITIONED SPACES

B. Mandatory and Prescriptive Indoor Lighting Control Schedule, PAF Calculation, and Field Inspection Checklist

Lighting Control Schedule			Standards Complying With [1] (✓ all that apply, or leave empty if Exempted)							PAF Credit Calculation [2]			✓ if Acceptance Test Required	Field Inspector	
01	02	03	04	05	06	07	08	09	10	11	12	13	14	15	
Location in Building	Type/ Description of Lighting Control (i.e.: occupancy sensor, automatic time switch, dimmer, automatic daylight, etc…)	# of Units	§130.1(a)	§130.1(b)	§130.1(c)	§130.1(d)	§130.1(e)	§140.6(a)2	§140.6(d)	Watts of Controlled Lighting	PAF	Control Credit (11 x 12)		Pass	Fail
RESTROOM MODULE	OCCUPANCY SENSOR	2	•	•	•	•		•				0	☐	○	○
												0	☐	○	○
												0	☐	○	○
												0	☐	○	○
												0	☐	○	○
												0	☐	○	○
												0	☐	○	○
Control Credit PAGE TOTAL (Sum of Column 13):												0			
IF MULTIPLE PAGES ARE USED, ENTER SUM TOTAL OF Control Credit for all pages HERE (Sum of all Column 13):												Enter Control Credit total into NRCC-LTI-01-E; Page 1.			

1. §130.1(a) = Manual area controls; §130.1(b) = Multi Level; §130.1(c) = Auto Shut-Off; §130.1(d) = Automatic Daylight; §130.1(e) = Demand Responsive; §140.6(d) = Additional lighting controls installed to earn a PAF; §140.6(d) = Prescriptive Secondary Sidelit Daylight Controls.
2. Check Table 140.6-A for correct PAF. PAFs shall not be traded between conditioned and unconditioned spaces. As a condition to earn a PAF, an Installation Certificate is also required to be filled out, signed, and submitted.

STATE OF CALIFORNIA
INDOOR LIGHTING – LIGHTING CONTROLS
CEC-NRCC-LTI-02-E (Revised 04/17) — CALIFORNIA ENERGY COMMISSION

CERTIFICATE OF COMPLIANCE	NRCC-LTI-02-E
Indoor Lighting - Lighting Controls	(Page 3 of 3)
Project Name: 24'x40' - SW/MF (PC 04-116500)	Date Prepared: 10/19/2018

DOCUMENTATION AUTHOR'S DECLARATION STATEMENT

1. I certify that this Certificate of Compliance documentation is accurate and complete.

Documentation Author Name: RALPH M. TAVARES	Documentation Author Signature:
Company: R&S TAVARES ASSOCIATES, INC.	Signature Date: 10/19/2018
Address: 11777 BERNARDO PLAZA CT. SUITE 105	CEA Certification Identification (if applicable):
City/State/Zip: SAN DIEGO, CA 92128	Phone: 858 444 3344 EXT 1801

RESPONSIBLE PERSON'S DECLARATION STATEMENT

I certify the following under penalty of perjury, under the laws of the State of California:
1. The information provided on this Certificate of Compliance is true and correct.
2. I am eligible under Division 3 of the Business and Professions Code to accept responsibility for the building design or system design identified on this Certificate of Compliance (responsible designer).
3. The energy features and performance specifications, materials, components, and manufactured devices for the building design or system design identified on this Certificate of Compliance conform to the requirements of Title 24, Part 1 and Part 6 of the California Code of Regulations.
4. The building design features or system design features identified on this Certificate of Compliance are consistent with the information provided on other applicable compliance documents, worksheets, calculations, plans and specifications submitted to the enforcement agency for approval with this building permit application.
5. I will ensure that a completed signed copy of this Certificate of Compliance shall be made available with the building permit(s) issued for the building, and made available to the enforcement agency for all applicable inspections. I understand that a completed signed copy of this Certificate of Compliance is required to be included with the documentation the builder provides to the building owner at occupancy.

Responsible Designer Name: MANNY D. FRISCH	Responsible Designer Signature:
Company: R&S TAVARES ASSOCIATES, INC.	Date Signed: 10/19/2018
Address: 11777 BERNARDO PLAZA CT. SUITE 105	License: S3380
City/State/Zip: SAN DIEGO, CA 91218	Phone: 858 444 3344 EXT 1810

IDENTIFICATION STAMP
DIV. OF THE STATE ARCHITECT
APP: 01-119031 INC:
REVIEWED FOR
SS ☑ FLS ☑ ACS ☑
DATE: 10/22/2020

PROFESSIONAL STAMP

REGISTERED PROFESSIONAL ENGINEER MANNY D. FRISCH No. S3380 STRUCTURAL STATE OF CALIFORNIA
11.28.2018

THE PLANS, IDEAS & DESIGNS SHOWN ON THESE DRAWINGS ARE THE PROPERTY OF R&S TAVARES ASSOCIATES, INC. DEVISED SOLELY FOR THIS CONTRACT. THESE PLANS SHALL NOT BE USED, IN WHOLE OR IN PART, FOR ANY PURPOSE FOR WHICH THEY WERE NOT INTENDED WITHOUT THE EXPRESS WRITTEN CONSENT OF R&S TAVARES ASSOCIATES, INC. ©

CLIENT
CLASS LEASING LLC
1221 Harley Knox Boulevard
Perris, CA 92571

ORIGINAL PC STATE AGENCY APPROVAL
FILE NUMBER: PC-128
IDENTIFICATION STAMP
DIVISION OF THE STATE ARCHITECT
APP. NO: 04 - 116501 INCR :
AC RM FLS RF SS KR
DATE 2/13/2019

PROJECT TITLE
12' x 40'

PROJECT SPECIFIC STATE AGENCY APPROVAL

Revision Schedule

#	Description	Date

SHEET TITLE
T24 - NRCC-LTI-01 & 02
INDOOR LIGHTING

PROJECT NUMBER
17030

DRAWN BY
rMc

CHECKED BY
RT

DATE
11.28.2018

SHEET NO.
E2.0
SHEET OF SHEETS

Proprietary Property of Class Leasing
Proprietary Property of Class Leasing
Proprietary Property of Class Leasing

STATE OF CALIFORNIA
OUTDOOR LIGHTING
CEC-NRCC-LTO-01-E (Revised 08/18) — CALIFORNIA ENERGY COMMISSION

CERTIFICATE OF COMPLIANCE	NRCC-LTO-01-E
Outdoor Lighting	(Page 1 of 4)
Project Name: 24'x40' - SW/MF (PC 04-116500)	Date Prepared: 07/23/2018

A. General Information

Project Address: NA	Total Illuminated Hardscape Area: NA

Phase of Construction: ☑ New Construction ☐ Addition ☐ Alteration

Outdoor Lighting Zone (LZ) ☐ LZ-1 ☐ LZ-2 ☑ LZ-3 ☐ LZ-4

I have confirmed with the AHJ which LZ applies to this site. For default lighting zone designations, see Title 24 Part 6, §10-114

B. Lighting Compliance Documents (check box for each document included)

For detailed instructions on the use of this and all Energy Efficiency Standards compliance documents, refer to the Nonresidential Manual published by the California Energy Commission.

☑	NRCC-LTO-01-E	Certificate of Compliance
☑	NRCC-LTO-02-E	Outdoor Lighting Controls Certificate of Compliance
☑	NRCC-LTO-03-E	Outdoor Lighting Power Allowance Certificate of Compliance
☐	NRCC-LTO-04-E	Outdoor Lighting Existing Conditions Certificate of Compliance

C. Summary of Allowed Outdoor Lighting Power

		Watts
01	**Sum Total ALLOWED** Outdoor Lighting Wattage from NRCC-LTO-03-E, page 1 Alterations with NO increase of connected lighting load may instead use the allowed wattage from NRCC-LTO-04, page 2.	30
	Complies ONLY if **Installed** (Box 02) ≤ **Allowed** (Box 01)	
02	**Sum Total INSTALLED** Outdoor Lighting Wattage from NRCC-LTO-01-E, page 3.	30

D. Declaration of Required Installation Certificates

Declare by checking all Installation Certificates that will be submitted. (Retain copies and verify compliance documents are completed and signed.)

☑ NRCI-LTO-01-E - Must be submitted for all buildings	☐ Field Inspector
☑ NRCI-LTO-02-E - Must be submitted for a lighting control system, or for an Energy Management Control System (EMCS), to be recognized for compliance.	☐ Field Inspector

E. Declaration of Required Certificates of Acceptance

Declare by checking all of the Certificates of Acceptance that will be submitted. (Retain copies and verify compliance documents are completed and signed.)

☑ NRCA-LTO-02-A - Must be submitted for outdoor lighting controls.	☐ Field Inspector

F. Schedule of Luminaires Exempt from the Outdoor Lighting Power Requirements in §140.7

01	02
Name or Symbol	Description of exempt luminaire in accordance with the exemptions

STATE OF CALIFORNIA
OUTDOOR LIGHTING
CEC-NRCC-LTO-01-E (Revised 08/18) — CALIFORNIA ENERGY COMMISSION

CERTIFICATE OF COMPLIANCE	NRCC-LTO-01-E
Outdoor Lighting	(Page 2 of 4)
Project Name: 24'x40' - SW/MF (PC 04-116500)	Date Prepared: 07/23/2018

G. Schedule of Luminaires Exempt from the Cutoff Requirements in §130.2(b)

01	02
Name or Symbol	Description of exempt luminaire in accordance with the exemptions

H. Schedule of Luminaires Exempt from the Outdoor Lighting Control Requirements in §130.2(c)

01	02
Name or Symbol	Description of exempt luminaire in accordance with the exemptions

APPROVED
DIVISION OF STATE ARCHITECT
HIGH PERFORMANCE SECTION
APP # 04-116501 DATE: 11/30/18

STATE OF CALIFORNIA
OUTDOOR LIGHTING
CEC-NRCC-LTO-01-E (Revised 08/18) — CALIFORNIA ENERGY COMMISSION

CERTIFICATE OF COMPLIANCE	NRCC-LTO-01-E
Outdoor Lighting	(Page 3 of 4)
Project Name: 24'x40' - SW/MF (PC 04-116500)	Date Prepared: 07/23/2018

I. Outdoor Lighting Schedule and Field Inspection Energy Checklist

Luminaire Schedule		Installed Watts					Location	Cutoff	Field Inspector	
01	02	03	04		05	06	07	08	09	
Name or Item Tag	Complete Luminaire Description	Watts per Luminaire	How wattage was determined: CEC Default from NA8	How wattage was determined: According to §130.0(c)	Number of Luminaires	Total Installed Watts in this area (03 x 05)	Primary Function area in which these luminaires are installed (Outdoor Lighting Zone)	BUG Rating	Pass	Fail
D	EXTERIOR LED LIGHT FIXTURE 30W MAX WITH PHOTOCELL MOUNT AT 93" AFF	30	☑	☐	1	30	ENTRANCE	UH: UL: FVH: BVH: FH: BH:	○	○
			☐	☐		0		UH: UL: FVH: BVH: FH: BH:	○	○
			☐	☐		0		UH: UL: FVH: BVH: FH: BH:	○	○
INSTALLED WATTS PAGE TOTAL:						30	Enter sum total of all pages (**Sum Total INSTALLED** Outdoor lighting wattage) into NRCC-LTO-01-E; Page 1		30	

STATE OF CALIFORNIA
OUTDOOR LIGHTING
CEC-NRCC-LTO-01-E (Revised 08/18) — CALIFORNIA ENERGY COMMISSION

CERTIFICATE OF COMPLIANCE	NRCC-LTO-01-E
Outdoor Lighting	(Page 4 of 4)
Project Name: 24'x40' - SW/MF (PC 04-116500)	Date Prepared: 07/23/2018

DOCUMENTATION AUTHOR'S DECLARATION STATEMENT

1. I certify that this Certificate of Compliance documentation is accurate and complete.

Documentation Author Name: RALPH M. TAVARES	Documentation Author Signature:
Company: R&S TAVARES ASSOCIATES, INC.	Signature Date: 07/23/2018
Address: 11777 BERNARDO PLAZA CT. SUITE 105	CEA Certification Identification (if applicable):
City/State/Zip: SAN DIEGO, CA 92128	Phone: 858 444 3344 EXT 1801

RESPONSIBLE PERSON'S DECLARATION STATEMENT

I certify the following under penalty of perjury, under the laws of the State of California:
1. The information provided on this Certificate of Compliance is true and correct.
2. I am eligible under Division 3 of the Business and Professions Code to accept responsibility for the building design or system design identified on this Certificate of Compliance (responsible designer).
3. The energy features and performance specifications, materials, components, and manufactured devices for the building design or system design identified on this Certificate of Compliance conform to the requirements of Title 24, Part 1 and Part 6 of the California Code of Regulations.
4. The building design features or system design features identified on this Certificate of Compliance are consistent with the information provided on other applicable compliance documents, worksheets, calculations, plans and specifications submitted to the enforcement agency for approval with this building permit application.
5. I will ensure that a completed signed copy of this Certificate of Compliance shall be made available with the building permit(s) issued for the building, and made available to the enforcement agency for all applicable inspections. I understand that a completed signed copy of this Certificate of Compliance is required to be included with the documentation the builder provides to the building owner at occupancy.

Responsible Designer Name: MANNY D. FRISCH	Responsible Designer Signature:
Company: R&S TAVARES ASSOCIATES, INC.	Date Signed: 07/23/2018
Address: 11777 BERNARDO PLAZA CT. SUITE 105	License: S3380
City/State/Zip: SAN DIEGO, CA 92128	Phone: 858 444 3344 EXT 1810

STATE OF CALIFORNIA
OUTDOOR LIGHTING CONTROLS
CEC-NRCC-LTO-02-E (Revised 08/18) — CALIFORNIA ENERGY COMMISSION

CERTIFICATE OF COMPLIANCE	NRCC-LTO-02-E
Outdoor Lighting Controls	(Page 1 of 3)
Project Name: 24'x40' - SW/MF (PC 04-116500)	Date Prepared: 07/23/2018

A. Mandatory Outdoor Lighting Control Declaration Statements

Check all that apply:

- ☑ Lighting shall be controlled by self-contained lighting control devices which are certified to the Energy Commission according to the Title 20 Appliance Efficiency Regulations in accordance with §110.9(a).
- ☐ Lighting shall be controlled by a lighting control system or energy management control system in accordance with §110.9. An Installation Certificate shall be submitted in accordance with §130.4(b).
- ☑ All lighting controls and equipment shall comply with the applicable requirements in §110.9 and shall be installed in accordance with the manufacturer's instructions in accordance with §130.0(d).
- ☐ Part-Night Outdoor Lighting Controls, as defined in Section 100.1(b), shall meet the requirements in Section 110.9(b)5.
- ☐ All outdoor incandescent luminaires rated over 100 watts, determined in accordance with Section 130.0(c), shall be controlled by a motion sensor.
- ☐ All outdoor luminaires rated for use with lamps greater than 150 lamp watts, determined in accordance with Section 130.0(c), shall comply with Uplight and Glare requirements in accordance with Section 130.2(b)
- ☑ All installed outdoor lighting shall be controlled by a photocontrol or outdoor astronomical time-switch control, or other control capable of automatically switching OFF in accordance with Section 130.2(c)1.
- ☐ All installed outdoor lighting shall be circuited and independently controlled from other electrical loads by an automatic scheduling control in accordance with Section 130.2(c)2.
- ☑ All installed outdoor lighting, where the bottom of the luminaire is mounted 24 feet or less above the ground, shall be controlled with automatic lighting controls in accordance with Section 130.2(c)3.
- ☐ For Outdoor Sales Frontage, an automatic lighting control shall be installed in accordance with Section 130.2(c)4.
- ☐ For Building Facade, Ornamental Hardscape and Outdoor Dining lighting, an automatic lighting control shall be installed in accordance with Section 130.2(c)5
- ☐ Before an occupancy permit is granted for the newly constructed building or for the addition, or for any altered outdoor lighting controls, shall be certified as meeting the Acceptance Requirements for Code Compliance in accordance with §130.4.(a). Outdoor lighting controls shall comply with the applicable requirements of Section 130.2(c) and Reference Nonresidential Appendix NA7.8.

STATE OF CALIFORNIA
OUTDOOR LIGHTING CONTROLS
CEC-NRCC-LTO-02-E (Revised 08/18) — CALIFORNIA ENERGY COMMISSION

CERTIFICATE OF COMPLIANCE	NRCC-LTO-02-E
Outdoor Lighting Controls	(Page 2 of 3)
Project Name: 24'x40' - SW/MF (PC 04-116500)	Date Prepared: 07/23/2018

B. Mandatory Outdoor Lighting Control Schedule and Field Inspection Checklist

Outdoor Lighting Control Schedule			Standards Complying With (✓ all that apply, or leave empty if Exempted)						✓ if Acceptance Test Required	Field Inspector	
01	02	03	04	05	06	07	08	09	10	11	
Location and Application of Luminaires Being Controlled	Type/ Description of Lighting Control (i.e. outdoor motion sensor, outdoor photocontrol, outdoor astronomical time-switch control, automatic scheduling control, part-night outdoor lighting control)	# of Units	§130.2(a)	§130.2(c)1	§130.2(c)2	§130.2(c)3	§130.2(c)4	§130.2(c)5		Pass	Fail
ENTRY DOOR	PHOTOCELL CONTROLLED	1		•		•			☐	○	○
									☐	○	○
									☐	○	○
									☐	○	○
									☐	○	○
									☐	○	○
									☐	○	○
									☐	○	○
									☐	○	○
									☐	○	○
									☐	○	○
									☐	○	○
									☐	○	○
									☐	○	○
									☐	○	○
									☐	○	○
									☐	○	○
									☐	○	○

STATE OF CALIFORNIA
OUTDOOR LIGHTING CONTROLS
CEC-NRCC-LTO-02-E (Revised 08/18) — CALIFORNIA ENERGY COMMISSION

CERTIFICATE OF COMPLIANCE	NRCC-LTO-02-E
Outdoor Lighting Controls	(Page 3 of 3)
Project Name: 24'x40' - SW/MF (PC 04-116500)	Date Prepared: 07/23/2018

DOCUMENTATION AUTHOR'S DECLARATION STATEMENT

1. I certify that this Certificate of Compliance documentation is accurate and complete.

Documentation Author Name: RALPH M. TAVARES	Documentation Author Signature:
Company: R&S TAVARES ASSOCIATES, INC.	Signature Date: 07/23/2018
Address: 11777 BERNARDO PLAZA CT. SUITE 105	CEA Certification Identification (if applicable):
City/State/Zip: SAN DIEGO, CA 92128	Phone: 858 444 3344 EXT 1801

RESPONSIBLE PERSON'S DECLARATION STATEMENT

I certify the following under penalty of perjury, under the laws of the State of California:
1. The information provided on this Certificate of Compliance is true and correct.
2. I am eligible under Division 3 of the Business and Professions Code to accept responsibility for the building design or system design identified on this Certificate of Compliance (responsible designer).
3. The energy features and performance specifications, materials, components, and manufactured devices for the building design or system design identified on this Certificate of Compliance conform to the requirements of Title 24, Part 1 and Part 6 of the California Code of Regulations.
4. The building design features or system design features identified on this Certificate of Compliance are consistent with the information provided on other applicable compliance documents, worksheets, calculations, plans and specifications submitted to the enforcement agency for approval with this building permit application.
5. I will ensure that a completed signed copy of this Certificate of Compliance shall be made available with the building permit(s) issued for the building, and made available to the enforcement agency for all applicable inspections. I understand that a completed signed copy of this Certificate of Compliance is required to be included with the documentation the builder provides to the building owner at occupancy.

Responsible Designer Name: MANNY D. FRISCH	Responsible Designer Signature:
Company: R&S TAVARES ASSOCIATES, INC.	Date Signed: 07/23/2018
Address: 11777 BERNARDO PLAZA CT. SUITE 105	License: S3380
City/State/Zip: SAN DIEGO, CA 92128	Phone: 858 444 3344 EXT 1810

IDENTIFICATION STAMP
DIV. OF THE STATE ARCHITECT
APP: 01-119031 INC:
REVIEWED FOR
SS ☑ FLS ☑ ACS ☑
DATE: 10/22/2020

PROFESSIONAL STAMP

REGISTERED PROFESSIONAL ENGINEER MANNY D. FRISCH No. S3380 STRUCTURAL STATE OF CALIFORNIA

11.28.2018

THE PLANS, IDEAS & DESIGNS SHOWN ON THESE DRAWINGS ARE THE PROPERTY OF R&S TAVARES ASSOCIATES, INC. DEVISED SOLELY FOR THIS CONTRACT. THESE PLANS SHALL NOT BE USED, IN WHOLE OR IN PART, FOR ANY PURPOSE FOR WHICH THEY WERE NOT INTENDED WITHOUT THE EXPRESS WRITTEN CONSENT OF R&S TAVARES ASSOCIATES, INC. ©

CLIENT

CLASS LEASING LLC
1221 Harley Knox Boulevard
Perris, CA 92571

ORIGINAL PC STATE AGENCY APPROVAL

FILE NUMBER: PC-128
IDENTIFICATION STAMP
DIVISION OF THE STATE ARCHITECT
APP. NO: 04 - 116501 INCR :
AC RM FLS RF SS KR
DATE 2/13/2019

PROJECT TITLE
12' x 40'

PROJECT SPECIFIC STATE AGENCY APPROVAL

Revision Schedule

#	Description	Date

SHEET TITLE
T24 - NRCC-LTO-01/02
OUTDOOR LIGHTING

PROJECT NUMBER
17030

DRAWN BY
rMc

CHECKED BY
RT

DATE
11.28.2018

SHEET NO.
E2.1
SHEET OF SHEETS

Proprietary Property of Class Leasing

5/4/2018 8:38:42 AM C:\Users\Cesar\Documents\17030 - Aries, 12x40 Moment Frame PC - MainFile.rvt 04.11.18_Cesar.rvt

STATE OF CALIFORNIA
Electrical Power Distribution
CEC-NRCC-ELC-01-E (Revised 01/16) — CALIFORNIA ENERGY COMMISSION

CERTIFICATE OF COMPLIANCE	NRCC-ELC-01-E
Electrical Power Distribution	Page of
Project Name: 24'x40' - SW/MF (PC 04-116500)	Date Prepared: 07/23/2018

General Information

Project Address:	Climate Zone:	Conditioned Floor Area : 480
NA	16	Unconditioned Floor Area :

Building Type: ☑ Nonresidential ☐ High-Rise Residential ☐ Hotel/Motel
☐ Schools ☐ Relocatable Public Schools ☐ Conditioned Spaces ☐ Unconditioned Spaces
Phase of Construction: ☑ New Construction ☐ Addition ☐ Alteration

In the table below identify all applicable construction documents that specify the requirements for the scope of responsibility reported by this certificate. Use additional poges as needed to list all construction documents related to compliance of Section 130.5.

Document Number	Document Title/Descriptions (include description information for Table or Schedule if it contains compliance information)	Document Sheet # or Page #	Indicate which subsection of Section 130.5 is related to the document (e.g. 130.5(a) for service electrical metering)

Add Row | Remove Last

A. Service Electrical Metering

Check one of the three boxes below if the electrical power distribution system is in compliance with Section 130.5(a).

☐ For newly installed electrical service in newly constructed buildings, Service Electrical Metering is required according to Section 130.5(a). *Fill out Column 1 through 6 of table below.*

☑ For new or replacement electrical service equipment in existing buildings, Service Electrical Metering is required according to Section 141.0(b)2Pi. *Fill out Column 1 through 6 of table below.*

☐ EXCEPTION to Electrical Service Metering: Service or feeder for which the utility company provides a metering system that indicates instantaneous kW demand and kWh for a utility-defined period. *Fill out Column 1, 2 and 6 of table below with the compliance information.*

Fill out a separate line for each electrical service that is connected to the building.

Electrical Service Schedule	Electrical	Metering Capabilities (check all that are present)				Exception to	Field Inspector
01	02	03	04	05	06	07	08
Electrical Service Designation/ Location/Description	kVA	Instantaneous (at the time) kW	Historical peak (kW)	Tracking kWh for a user-definable period	kWh per rate period	Utility metering system	Check that the metering complies
IT WILL VARY DEPENDING ON CLIENT'S SITE PROJECT - RELOCATABLE WORK ROOM	0	☐	☐	☐	☐	☐	☐

Add Row | Remove Last

STATE OF CALIFORNIA
Electrical Power Distribution
CEC-NRCC-ELC-01-E (Revised 01/16) — CALIFORNIA ENERGY COMMISSION
CERTIFICATE OF COMPLIANCE NRCC-ELC-01-E
Electrical Power Distribution Page of
Project Name: 24'x40' - SW/MF (PC 04-116500) Date Prepared: 07/23/2018

B. Separation of Electrical Circuits for Electrical Energy Monitoring

Check all boxes below if the electrical power distribution system is in compliance with Section 130.5(b).

☑ The electrical power distribution system meets the separation of electrical circuits for electrical energy monitoring requirement of Section 130.5(b). The electrical power distribution systems is designed so that measurement devices can monitor the electrical energy usage of load types according to TABLE 130.5-B.

☐ Describe the electrical power distribution system installed and the compliance method chosen in meeting the requirement of Section 130.5(b). Use the space below to include the information. Examples of compliance methods are detailed in Nonresidential Compliance Manual Chapter 8.

Fill out Column 1 thru 3 with the compliance information.

General Information	Electrical Power Distribution System information and Method of compliance	Electrical Service Rating	Enforcement Agency
01	02	03	04
Electrical Service Designation/Location/Description	Describe the electrical power distribution system installed and the compliance method used	kVA	Check that the system complies
IT WILL VARY DEPENDING ON CLIENT'S SITE PROJECT - RELOCATABLE WORK ROOM	NA	0	☐

Field Inspector Notes:

STATE OF CALIFORNIA
Electrical Power Distribution
CEC-NRCC-ELC-01-E (Revised 01/16) — CALIFORNIA ENERGY COMMISSION
CERTIFICATE OF COMPLIANCE NRCC-ELC-01-E
Electrical Power Distribution Page of
Project Name: 24'x40' - SW/MF (PC 04-116500) Date Prepared: 07/23/2018

C. Voltage Drop

Check all boxes below if he electrical power distribution system is in compliance with Section 130.5(c).

	Enforcement Agency Check that the system complies
☑ The electrical power distribution system meets the voltage drop requirement of Section 130.5(c). The maximum combined voltage drop on feeder conductors and branch circuit conductors to the farthest connected load or outlet, do not exceed 5%.	☐
☐ Voltage drop calculation documents showing compliance to Section 130.5(c) are submitted as part of the compliance document submittal.	☐

D. Circuit Controls for 120-Volt Receptacles and Controlled Receptacles

Check one or more boxes below for applicable requirements of Section 130.5(d) for the electrical power distribution system.

	Field Inspector Check that the system complies
☐ The control is capable of automatically shutting OFF the controlled receptacles when the space is typically unoccupied, either at the receptacle or circuit level. For the automatic time switch control, it incorporates an override control that allows the controlled receptacle to remain ON for no more than 2 hours when an override is initiated and an automatic holiday "shut-OFF" feature that turns OFF all loads for at least 24 hours and then resumes the normally scheduled operation. Countdown timer switches are not be used to comply with the automatic time switch control requirements. The controls meet the requirement of Section 130.5(d)1.	☐
☑ There is at least one controlled receptacle within 6 ft from each uncontrolled receptacle. Where receptacles are installed in modular furniture in open office area, at least one controlled receptacle is installed at each workstation. The receptacles meet the requirement of Section 130.5(d)2.	☐
☐ There are installed split wired receptacles with at least one controlled and one uncontrolled receptacle. Where receptacles are installed in modular furniture in open office area, at least one controlled receptacle is installed at each workstation. The receptacles meet the requirement of Section 130.5(d)2.	☐
☑ Permanent and durable marking for controlled receptacles or circuits to differentiate them from uncontrolled receptacles or circuits is provided. The markings meet the requirement of Section 130.5(d)3.	☐
☐ For hotel and motel guest rooms, there are controlled receptacles for at least one-half of the 120-volt receptacles in each guest room. Electric circuits serving controlled receptacles in guestrooms are installed to have captive key controls, occupancy sensing controls, or automatic controls so the power is switched off no longer than 30 minutes after the guest room has been vacated. The receptacles meet the requirement of Section 130.5(d)4.	☐
☑ Receptacles that are only for the following purposes are excepted from Section 130.5(d): - Receptacles specifically for refrigerators and water dispensers in kitchen areas. - Receptacles located a minimum of six ft above the floor that are specifically for clocks. - Receptacles for network copiers, fax machines, A/V and data equipment other than personal computers in copy rooms. - Receptacles on circuits rated more than 20 amperes. - Receptacles connected to an uninterruptible power supply (UPS) that are intended to be in continuous use, 24 hours per day/365 days per year, and are marked to differentiate them from other uncontrolled receptacles or circuits.	☐

STATE OF CALIFORNIA
Electrical Power Distribution
CEC-NRCC-ELC-01-E (Revised 01/16) — CALIFORNIA ENERGY COMMISSION
CERTIFICATE OF COMPLIANCE NRCC-ELC-01-E
Electrical Power Distribution Page of
Project Name: 24'x40' - SW/MF (PC 04-116500) Date Prepared: 07/23/2018

DOCUMENTATION AUTHOR'S DECLARATION STATEMENT

1. I certify that this Certificate of Compliance documentation is accurate and complete.

Documentation Author Name: RALPH M. TAVARES	Documentation Author Signature:
Company: R&S TAVARES ASSOCIATES, INC.	Signature Date: 07/23/2018
Address: 11777 BERNARDO PLAZA CT. SUITE 105	CEA/ HERS Certification Identification (if applicable):
City/State/Zip: SAN DIEGO, CA 92128	Phone: 858-444-3344 EXT 1801

RESPONSIBLE PERSON'S DECLARATION STATEMENT

I certify the following under penalty of perjury, under the laws of the State of California:
1. The information provided on this Certificate of Compliance is true and correct.
2. I am eligible under Division 3 of the Business and Professions Code to accept responsibility for the building design or system design identified on this Certificate of Compliance (responsible designer).
3. The energy features and performance specifications, materials, components, and manufactured devices for the building design or system design identified on this Certificate of Compliance conform to the requirements of Title 24, Part 1 and Part 6 of the California Code of Regulations.
4. The building design features or system design features identified on this Certificate of Compliance are consistent with the information provided on other applicable compliance documents, worksheets, calculations, plans and specifications submitted to the enforcement agency for approval with this building permit application.
5. I will ensure that a completed signed copy of this Certificate of Compliance shall be made available with the building permit(s) issued for the building, and made available to the enforcement agency for all applicable inspections. I understand that a completed signed copy of this Certificate of Compliance is required to be included with the documentation the builder provides to the building owner at occupancy.

Responsible Designer Name: MANNY D. FRISCH	Responsible Designer Signature:
Company: R&S TAVARES ASSOCIATES, INC.	Date Signed: 07/23/2018
Address: 11777 BERNARDO PLAZA CT. SUITE 105	License: S3380
City/State/Zip: SAN DIEGO, CA 91218	Phone: 858 444 3344 EXT 1810

IDENTIFICATION STAMP
DIV. OF THE STATE ARCHITECT
APP: 01-119031 INC:
REVIEWED FOR
SS ☑ FLS ☑ ACS ☑
DATE: 10/22/2020

PROFESSIONAL STAMP
REGISTERED PROFESSIONAL ENGINEER MANNY D. FRISCH No. S3380 STRUCTURAL STATE OF CALIFORNIA
11.28.2018

THE PLANS, IDEAS & DESIGNS SHOWN ON THESE DRAWINGS ARE THE PROPERTY OF R&S TAVARES ASSOCIATES, INC. DEVISED SOLELY FOR THIS CONTRACT. THESE PLANS SHALL NOT BE USED, IN WHOLE OR IN PART, FOR ANY PURPOSE FOR WHICH THEY WERE NOT INTENDED WITHOUT THE EXPRESS WRITTEN CONSENT OF R&S TAVARES ASSOCIATES, INC. ©

CLIENT
CLASS LEASING LLC
1221 Harley Knox Boulevard
Perris, CA 92571

ORIGINAL PC STATE AGENCY APPROVAL
FILE NUMBER: PC-128
IDENTIFICATION STAMP
DIVISION OF THE STATE ARCHITECT
APP. NO: 04 - 116501 INCR :
AC RM FLS RF SS KR
DATE 2/13/2019

PROJECT TITLE
12' x 40'

PROJECT SPECIFIC STATE AGENCY APPROVAL

Revision Schedule

#	Description	Date

SHEET TITLE
T24 - NRCC-ELC-01
ELECTRICAL POWER DISTRIBUTION

PROJECT NUMBER 17030
DRAWN BY rMc
CHECKED BY RT
DATE 11.28.2018
SHEET NO. E2.2
SHEET OF SHEETS

Proprietary Property of Class Leasing
Proprietary Property of Class Leasing
Proprietary Property of Class Leasing

ABB.	DESCRIPTION	SYMBOL
WM	WALL MOUNTED UNIT (SEE SCHEDULE THIS SHEET)	WM-1
RM	ROOF MOUNTED UNIT (SEE SCHEDULE THIS SHEET)	RM-1
P.O.C	POINT OF CONNECTION	P.O.C
CO2	CARBON MONOXIDE SENSOR	CO2
BT	BYPASS TIMER	BT
STAT	THERMOSTAT	T
UC	UNDERCUT DOOR	UC
MVD	MANUAL VOLUME DAMPER	
FD	FIRE DAMPER	
VTR	VENT THRU ROOF	
ER	EXHAUST CEILING REGISTER	
CR	RETURN CEILING REGISTER	
CD	SUPPLY CEILING DIFFUSER	
(L)	LINED DUCTWORK	
EAD	EXHAUST AIR DUCT	
RAD	RETURN AIR DUCT	
SAD	SUPPLY AIR DUCT	
EF	EXHAUST FAN	EF -

1 1" = 1'-0" *Legend M0.1*

EQUIPMENT ANCHORAGE

ALL MECHANICAL, PLUMBING AND ELECTRICAL COMPONENTS SHALL BE ANCHORED AND INSTALLED PER THE DETAILS ON THE DSA APPROVED CONSTRUCTION DOCUMENTS. WHERE NO DETAIL IS INDICATED, THE FOLLOWING COMPONENTS SHALL BE ANCHORED OR BRACED TO MEET THE FORCE AND DISPLACEMENT REQUIREMENTS PRESCRIBED IN THE 2016 CBC, SECTIONS 1616A.1.18 THROUGH 1616A.1.26 AND ASCE 7-10 CHAPTER 13, 26 AND 30.

1. ALL PERMANENT EQUIPMENT AND COMPONENTS.
2. TEMPORARY OR MOVABLE EQUIPMENT THAT IS PERMANENTLY ATTACHED (E.G. HARD WIRED) TO THE BUILDING UTILITY SERVICES SUCH AS ELECTRICITY, GAS OR WATER.
3. MOVABLE EQUIPMENT WHICH IS STATIONED IN ONE PLACE FOR MORE THAN 8 HOURS AND HEAVIER THAN 400 POUNDS ARE REQUIRED TO BE ANCHORED WITH TEMPORARY ATTACHMENTS.

THE ATTACHMENT OF THE FOLLOWING MECHANICAL AND ELECTRICAL COMPONENTS SHALL BE POSITIVELY ATTACHED TO THE STRUCTURE, BUT NEED NOT BE DETAILED ON THE PLANS. THESE COMPONENTS SHALL HAVE FLEXIBLE CONNECTIONS PROVIDED BETWEEN THE COMPONENT AND ASSOCIATED DUCTWORK, PIPING, AND CONDUIT.

A. COMPONENTS WEIGHING LESS THAN 400 POUNDS AND HAVE A CENTER OF MASS LOCATED 4 FEET OR LESS ABOVE THE ADJACENT FLOOR OR ROOF LEVEL THAT DIRECTLY SUPPORT THE COMPONENT.
B. COMPONENTS WEIGHING LESS THAN 20 POUNDS, OR IN THE CASE OF DISTRIBUTED SYSTEMS, LESS THAN 5 POUNDS PER FOOT, WHICH ARE SUSPENDED FROM A ROOF OR FLOOR OR HUNG FROM A WALL.

FOR THOSE ELEMENTS THAT DO NOT REQUIRE DETAILS ON THE APPROVED DRAWINGS, THE INSTALLATION SHALL BE SUBJECT TO THE APPROVAL OF THE STRUCTURAL ENGINEER OF RECORD AND THE DSA DISTRICT STRUCTURAL ENGINEER. THE PROJECT INSPECTOR WILL VERIFY THAT ALL COMPONENTS AND EQUIPMENT HAVE BEEN ANCHORED IN ACCORDANCE WITH ABOVE REQUIREMENTS.

BRACING OF PIPING, DUCTWORK AND ELECTRICAL SYSTEM:

PIPING, DUCTWORK AND ELECTRICAL DISTRIBUTION SYSTEMS SHALL BE BRACED TO COMPLY WITH THE FORCES AND DISPLACEMENTS PRESCRIBED IN ASCE 7-10 SECTION 13.3 AS DEFINED IN ASCE 7-10 SECTION 13.6.8, 13.6.7, 13.6.5.6 AND 2016 CBC SECTIONS 1616A.1.23, 1616A.1.24, 1616A.1.25 AND 1616A.1.26

THE BRACING AND ATTACHMENTS TO THE STRUCTURE SHALL BE DETAILED ON THE APPROVED DRAWINGS OR THEY SHALL COMPLY WITH ONE OF THE OSHPD PRE-APPROVALS (OPA #) AS MODIFIED TO SATISFY ANCHORAGE REQUIREMENTS OF ACI 318, APPENDIX D.

COPIES OF THE MANUAL SHALL BE AVAILABLE ON THE JOBSITE PRIOR TO THE START OF HANGING AN BRACING OF THE PIPE, DUCTWORK AND ELECTRICAL DISTRIBUTION SYSTEMS.

THE STRUCTURAL ENGINEER OF RECORD SHALL VERIFY THE ADEQUACY OF THE STRUCTURE TO SUPPORT THE HANGER AND BRACE LOADS.

5 1" = 1'-0" *EQUIPMENT ANCHORAGE*

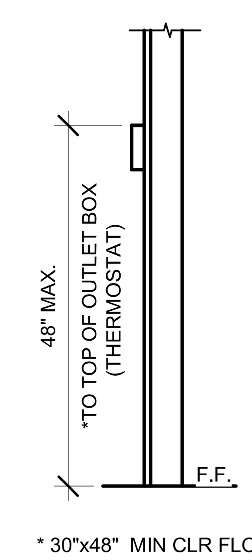

* 30"x48" MIN CLR FLOOR SPACE AT EACH LOCATION FOR PERPENDICULAR APPROACH

7 1" = 1'-0" *MOUTING ELEV.*

Single Package Heat Pump Schedule

Item:		WM
Location		Wall
Model Number		WH 262
Type		Heat Pump
Nominal Capacity		2 - Tons
Manufacturer		Intertherm or EQ.
Heating CAP. BTUH		24,000
Disposable Filters Number and Size		(2)20x20x1
WT LBS. (MAX)		500 MAX.
SEER		12.0
EER.		11.0
HSPF		7.7
COP		3.0
Fan Data	R.P.M.	1200
	C.F.M.	800
	DRIVE	Direct
	EXT S.P. H20	0.5 IN.
MOTORDATA Mech	R.P.M.	600
	H.P.	1/5
MOTORDATA Elec	PH/HZ.	1Ø/60 HZ.
	FLA	30.6
	V	208/230 V
Ent. Air DB/WB °F		80/67
Cool Cap BTUH	Sensible	18,600
	Total	24,800

REMARKS:

AUTO CHANGE-OVER THERMOSTAT
OUTSIDE AIR INTAKE HOOD.

MINIMUM OUTSIDE AIR = 180 CFM

CEILING MOUNTED EXHAUST FAN

SYM.	USE	MFR/MODEL	CFM	SOUND LEVEL	SP	VOLTS	Ø	POWER	WGT#	NOTES
EF 2	BATHROOM EXHAUST	*BROAN L100	109	1.0 SONES	0.25	120	1	87 WATTS	22.80#	WITH BROAN ROOF CAP #634. PROVIDE 6" DIA. EXHAUST DUCT UP TO ROOF. INTERLOCK WITH LIGHT SWITCH
EF 3	BATHROOM EXHAUST	*BROAN L200	210	2.0 SONES	0.25	120	1	127 WATTS	23#	WITH BROAN ROOF CAP #634. PROVIDE 8" DIA. EXHAUST DUCT UP TO ROOF. INTERLOCK WITH LIGHT SWITCH
EF 4	BATHROOM EXHAUST	*BROAN L300	308	2.8 SONES	0.25	120	1	212 WATTS	23.1O#	WITH BROAN ROOF CAP #634. PROVIDE 8" DIA. EXHAUST DUCT UP TO ROOF. INTERLOCK WITH LIGHT SWITCH.
EF 1	BATHROOM EXHAUST	*BROAN 676	100	4.0 SONES	0.25	120	1	156 WATTS	7#	WITH BROAN ROOF CAP #636. PROVIDE 4" DIA. EXHAUST DUCT UP TO ROOF. INTERLOCK WITH LIGHT SWITCH.

*OR APPROVED EQUAL.

2 1" = 1'-0" *CEILING MOUNTED EXHAUST FAN SCHEDULE*

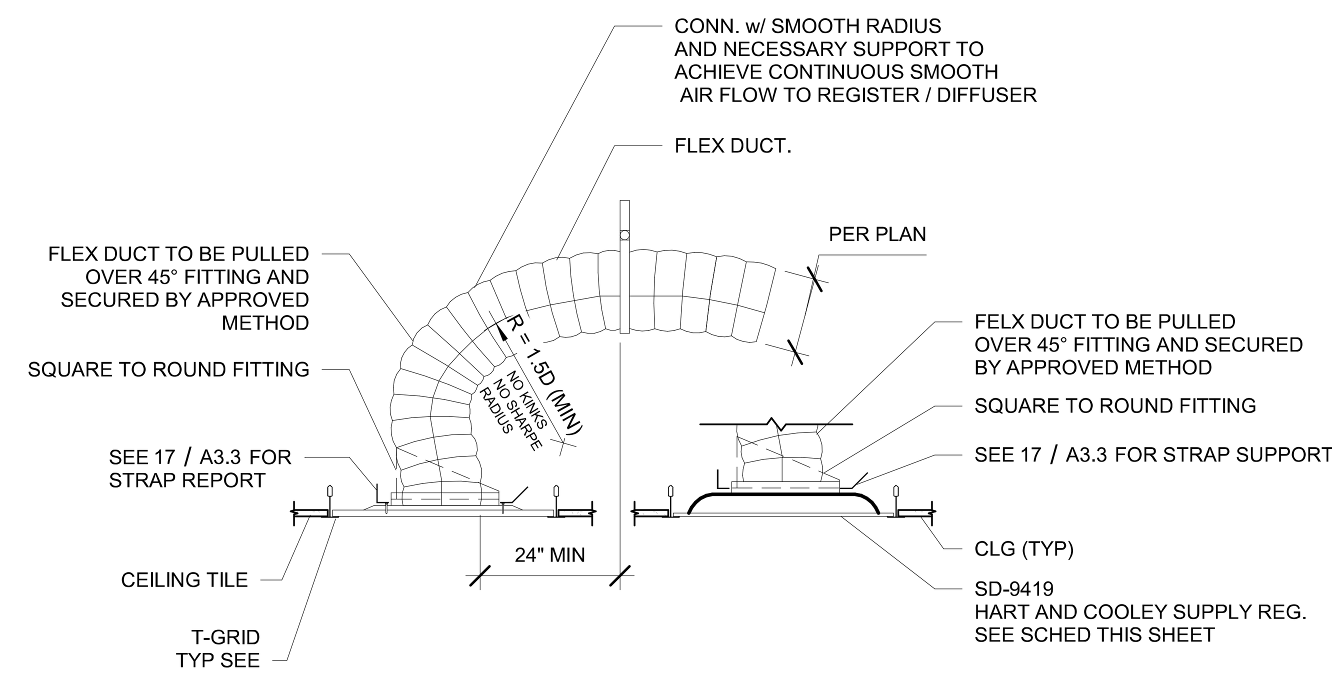

6 1/2" = 1'-0" *Round Air Distribution*

Single Package RM Heat Pump Schedule

Item:		Standard
Location		Roof
Unit No.		AC-1
Model Number		50EZ024
Type		Heat Pump
Nominal Capacity		2 - Tons
Manufacturer		Carrier
Heating CAP. BTUH		23,400
Disposable Filters Number and Size		20x20x1
WT LBS.		343
SEER.		13.0
EER		11.5
HSPF		7.7
Fan Data	R.P.M.	825
	C.F.M.	800
	DRIVE	Direct
	EXT S.P. H20	0.5 IN.
MOTORDATA Mech	R.P.M.	1050
	H.P.	1/5
MOTORDATA Elec	PH/HZ.	1Ø/60 HZ.
	FLA	13.8
	V	208 V
Ent. Air DB/WB °F		80/67
Cool Cap BTUH	Sensible	16,600
	Total	23,800

REMARKS:

WITH PRE-FAB ROOF CURB, AUTOCHANGE-OVER THERMOSTAT,
OUTSIDE AIR INTAKE HOOD.

MINIMUM OUTSIDE AIR = 180 CFM

PERFORATED FACE GRILLE SCHEDULE (SUPPLY)

16x16-4W

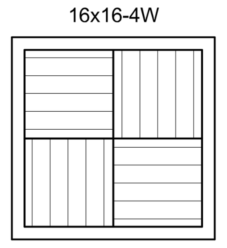

T-BAR SUPPLY

Fixed Curve Blade, 4-way throw

NECK SIZE	CFM (RANGE)	NOTES
6"Ø	0-150	SEE DETAIL FOR MAKE AND MODEL
8"Ø	150-230	SEE DETAIL FOR MAKE AND MODEL
10"Ø	230-350	SEE DETAIL FOR MAKE AND MODEL
12"Ø	350-460	SEE DETAIL FOR MAKE AND MODEL
14"Ø	460-640	SEE DETAIL FOR MAKE AND MODEL

3 1" = 1'-0" *PFG SCHED (SUPPLY)*

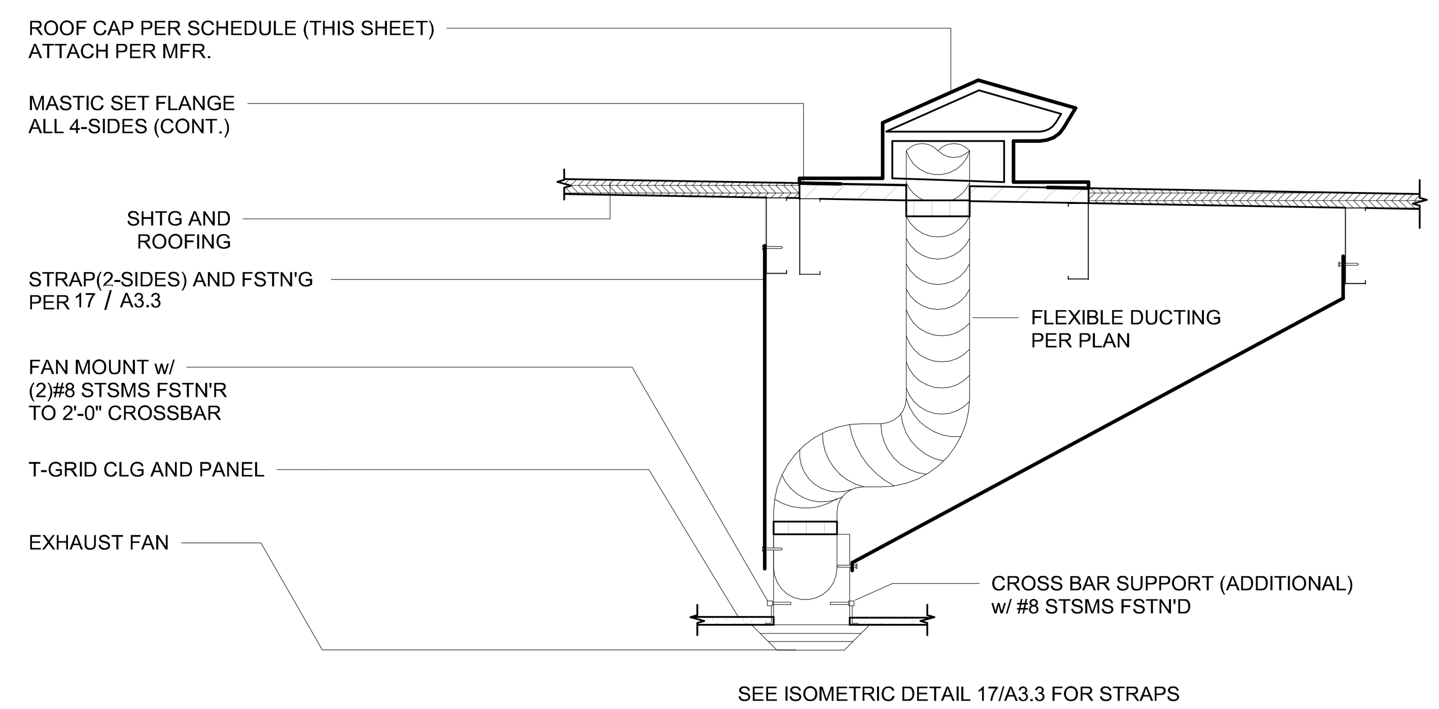

8 1" = 1'-0" *EXHAUST FAN INSTALLATION AND ROOF CAP*

HVAC NOTES

1. SET BACK THERMOSTAT SHALL BE PROVIDED
2. AIR HANDLERS WITH OTHER VOLTAGES SHOULD BE ACCEPTABLE, AS WELL AS OTHERS THAN THE MAKE AND MODELS LISTED ON THESE TABLES, WHEN THE NOMINAL TONNAGE DOES NOT EXCEEDS 5 TON AND THE SEER, HSPF AND COP VALUES ARE NO LESS THAN SHOWN.
3. HVAC SYSTEM DOES NOT CONTAIN AN ECONOMIZER AND DEMAND CONTROL VENTILATION DEVICES.
4. IF THE BUILDING WILL BE USED AS WORKROOM, CEC REQUIRES THE MINIMUM OUTSIDE AIR OF 0.15 CFM/SF OR 15 CFM PER OCCUPANT, WHICHEVER IS GREATER.
   IF THE BUILDING WILL BE USED AS CLASSROOMS, CEC REQUIRES THE MINIMUM OUTSIDE AIR OF 0.38 CFM/SF OR 15 CFM PER OCCUPANT, WHICHEVER IS GREATER.
   PC MANUFACTURER SHALL VERIFY WITH THE SCHOOL DISTRICT THE EXPECTED NUMBER OF OCCUPANTS IN THE CLASSROOM SO THAT THE OUTDOOR VENTILATION RATE FOR MECHANICAL SYSTEMS CAN BE ADEQUATELY ADJUSTED UPON SITE INSTALLATION OF THE BUILDING. PC MANUFACTURER SHALL ALSO CONFIRM WITH HVAC EQUIPMENT MANUFACTURER THAT THE SELECTED EQUIPMENT WILL BE ABLE TO PERFORM TO ACCOMODATE THE ADDITIONAL OUTDOOR AIR REQUIREMENTS UNDER THE PEAK DESIGN CONDITIONS FOR THE CLIMATE ZONE IN WHICH THE BUILDING IS LOCATED. AT OCCUPANCY, THE BUILDING MANUFACTURER SHALL PROVIDE TO BUILDING OWNER A DESCRIPTION OF THE QUANTITIES OF OUTDOOR AND RECIRCULATED AIR THAT THE VENTILATION SYSTEMS ARE DESIGNED TO PROVIDE EACH AREA.

PERFORATED FACE GRILLE SCHEDULE (RETURN)

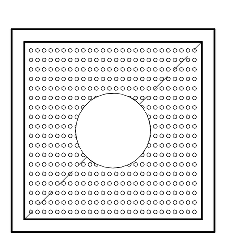

T-BAR RETURN

Perforated Face

Shoemaker 105P with 24 ga. 45 deg.

NECK SIZE	CFM (RANGE)	NOTES
6"Ø	0-230	SEE MECH CLG PLAN FOR SIZE
10"Ø	230-460	SEE MECH CLG PLAN FOR SIZE
14"Ø	460-710	SEE MECH CLG PLAN FOR SIZE

5 1" = 1'-0" *PFG SCHED (RETURN)*

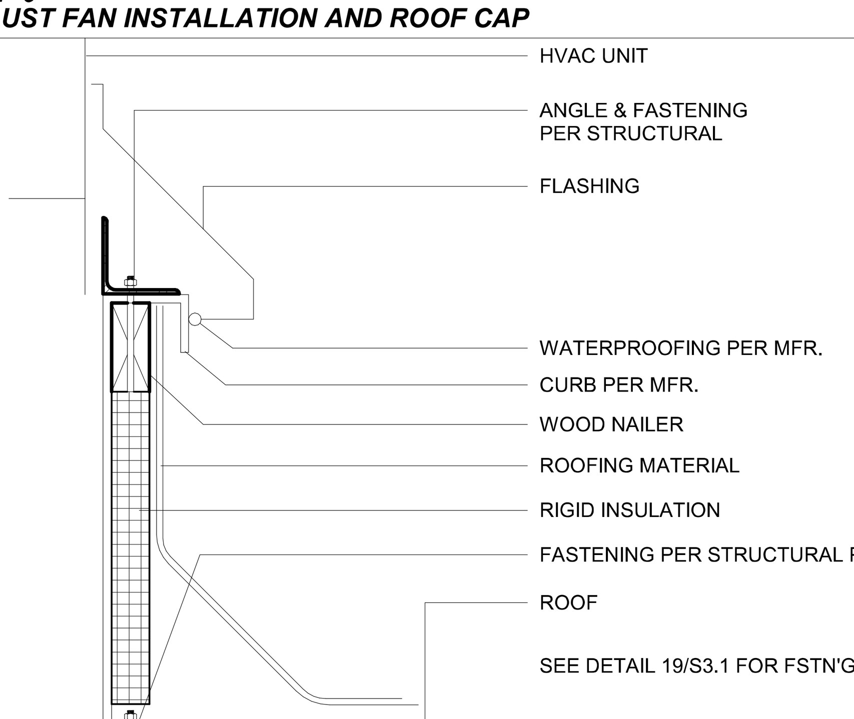

9 1" = 1'-0" *CURB AND MOUTING*

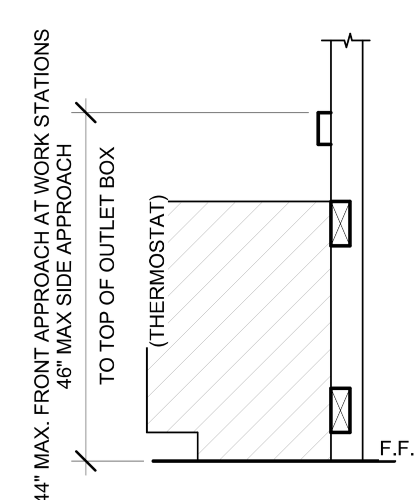

10 1" = 1'-0" *ELEV. @ WORKSTATION*

*FOR 24x40 BUILDING A 5 TONS UNIT IS ONLY TO BE USED ON COMPUTER LAB APPLICATION
**OR EQUAL

2016 CALGREEN AND ENERGY CODE - COMPLIANCE SECTIONS

FILTER SPECIFICATION:

5.504.3 - ALL EXPOSED DUCT OPENINGS AND MECHANICAL EQUIPMENT SHALL BE COVERED AND PROTECTED DURING CONSTRUCTION AND SHIPMENT.

5.504.5.3 - HVAC FILTER (MERV RATING OF 8 MINIMUN OR HIGHER). ALL MECHANICAL EQUIPMENT WHICH REQUIRES A FILTER SHALL NOT BE OPERATED WITHOUT A FILTER IN PLACE.

OUTDOOR AIR QUALITY:

HVAC EQUIPMENT DOES NOT CONTAIN CFCS OR HALONS.

IDENTIFICATION STAMP
DIV. OF THE STATE ARCHITECT
APP: 01-119031 INC:
REVIEWED FOR
SS ☑ FLS ☑ ACS ☑
DATE: 10/22/2020

PROFESSIONAL STAMP

REGISTERED PROFESSIONAL ENGINEER No. S3380 STRUCTURAL STATE OF CALIFORNIA

11.28.2018

THE PLANS, IDEAS & DESIGNS SHOWN ON THESE DRAWINGS ARE THE PROPERTY OF R&S TAVARES ASSOCIATES, INC. DEVISED SOLELY FOR THIS CONTRACT. THESE PLANS SHALL NOT BE USED, IN WHOLE OR IN PART, FOR ANY PURPOSE FOR WHICH THEY WERE NOT INTENDED WITHOUT THE EXPRESS WRITTEN CONSENT OF R&S TAVARES ASSOCIATES, INC. ©

CLIENT

CLASS LEASING LLC
1221 Harley Knox Boulevard
Perris, CA 92571

ORIGINAL PC STATE AGENCY APPROVAL

FILE NUMBER: PC-128
IDENTIFICATION STAMP
DIVISION OF THE STATE ARCHITECT
APP. NO: 04 - 116501 INCR :
AC RM FLS RF SS KR
DATE 2/13/2019

PROJECT TITLE
12' x 40'

PROJECT SPECIFIC STATE AGENCY APPROVAL

Revision Schedule

#	Description	Date

SHEET TITLE
MISCELLANEOUS NOTES & DETAILS

PROJECT NUMBER
17030

DRAWN BY
rMc

CHECKED BY
RT

DATE
11.28.2018

SHEET NO.
M0.1

SHEET OF SHEETS

Proprietary Property of Class Leasing
Proprietary Property of Class Leasing
Proprietary Property of Class Leasing
Proprietary Property of Class Leasing

C:\Users\Cesar\Documents\17030 - Aries, 12x40 Moment Frame PC - MainFile.rvt 04.11.18_Cesar.rvt
5/4/2018 8:38:28 AM

PC DESIGN REVIEW INFORMATION

Title 24, Part 6, Energy Code
DSA Application #: 04-116500
Calculation Date/Time of Energy Report: 2018-11-07 15:09:41
Model Name and Option: **12'x40'** - SW/MF
Total Floor Area: 480ft^2
HVAC System Type: Simple / Wall Mounted A/C

Climate Zone (Reference City)	Azimuth (Front Orientation)	TDV - Standard Design	TDV - Proposed Design	Compliance Margin
14 (Palmdale)	30	404.48	378.87	6.33%
	75	390.69	376.16	3.73%
	120	414.17	382.24	7.71%
	165	424.49	386.19	9.02%
	210	418.29	383.65	8.28%
	255	391.78	376.76	3.83%
	300	404.16	378.66	6.31%
	345	410.39	379.82	7.45%
15 (Palm Springs-Intl)	30	466.21	421.22	9.65%
	75	452.87	417.76	7.75%
	120	460.63	421.92	8.40%
	165	477.26	425.10	10.93%
	210	471.11	422.72	10.97%
	255	450.88	416.41	7.65%
	300	462.53	418.47	9.53%
	345	470.35	421.13	10.46%
16 (Blue Canyon) <	30	391.69	365.32	6.73%
	< 75	372.65	363.00	< 2.60%
	120	383.12	367.84	3.99%
	165	387.97	371.48	4.25%
	210	384.40	369.60	3.85%
	255	374.81	364.26	2.81%
	300	393.77	365.35	7.22%
	345	401.59	366.19	8.81%

Reference: Energy Code, Appendix NA4, Table NA4-3
Notes:
* In the event that there are identical percentages, select one.
**This table is not currently generated by the energy software.
< Least Compliance Margin Orientation

APPROVED

Project Name:	12X40 (PC 04-116500) - Wall AC	NRCC-PRF-01-E	Page 1 of 18
Project Address:	Climate Zone 16 Blue Canyon	Calculation Date/Time:	15:09, Wed, Nov 07, 2018
Compliance Scope:	NewComplete	Input File Name:	12X40 PC - CZ16(Wall AC)RR (75)1.cibd16x

A. PROJECT GENERAL INFORMATION

1.	Project Location (city)	Blue Canyon	8.	Standards Version	Compliance2016
2.	CA Zip Code		9.	Compliance Software (version)	EnergyPro 7.2
3.	Climate Zone	16	10.	Weather File	BLUE-CANYON_725845_CZ2010.epw
4.	Total Conditioned Floor Area in Scope	480 ft^2	11.	Building Orientation (deg)	(E) 75 deg
5.	Total Unconditioned Floor Area	0 ft^2	12.	Permitted Scope of Work	NewComplete
6.	Total # of Stories (Habitable Above Grade)	1	13	Building Type(s)	Nonresidential
7.	Total # of dwelling units	0	14	Gas Type	NaturalGas

B. COMPLIANCE RESULTS FOR PERFORMANCE COMPONENTS (Annual TDV Energy Use, kBtu/ft ^{2}-yr) — § 140.1

BUILDING COMPLIES

1. Energy Component	2. Standard Design (TDV)	3. Proposed Design (TDV)	4. Compliance Margin (TDV)	5. Percent Better than Standard
Space Heating	47.38	91.80	-44.42	-93.8%
Space Cooling	60.73	68.60	-7.87	-13.0%
Indoor Fans	131.10	79.53	51.57	39.3%
Heat Rejection	--	--	--	--
Pumps & Misc.	--	--	--	--
Domestic Hot Water	10.37	10.37	--	0.0%
Indoor Lighting	58.59	48.22	10.37	17.7%
COMPLIANCE TOTAL	**308.17**	**298.52**	**9.65**	**3.1%**
Receptacle	64.48	64.48	0.0	0.0%
Process	--	--	--	--
Other Ltg	--	--	--	--
Process Motors	--	--	--	--
TOTAL	**372.65**	**363.00**	**9.6**	**2.6%**

Project Name:	12X40 (PC 04-116500) - Wall AC	NRCC-PRF-01-E	Page 2 of 18
Project Address:	Climate Zone 16 Blue Canyon	Calculation Date/Time:	15:09, Wed, Nov 07, 2018
Compliance Scope:	NewComplete	Input File Name:	12X40 PC - CZ16(Wall AC)RR (75)1.cibd16x

C. PRIORITY PLAN CHECK/ INSPECTION ITEMS (in order of highest to lowest TDV energy savings)

1st	Indoor Fans: Check envelope and mechanical
2nd	Indoor Lighting: Check lighting
3rd	Heat Rejection: Check envelope and mechanical
4th	Pumps & Misc.: Check mechanical
5th	Domestic Hot Water: Check mechanical
6th	Space Cooling: Check envelope and mechanical
7th	Space Heating: Check envelope and mechanical

Compliance Margin By Energy Component (from Table B column 4)

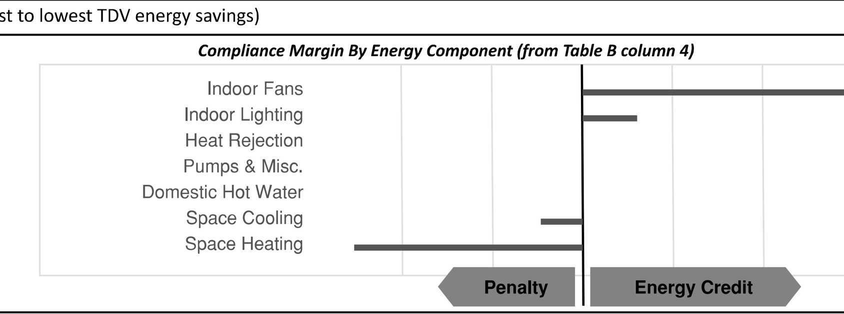

D. EXCEPTIONAL CONDITIONS

The building does not include service water heating. Verify that service water heating is not required and is not included in the design.

This project uses the Simplified Geometry Performance Modeling Approach which is not capable of modeling daylighting controls and assumes the prescriptive Secondary Daylit Control requirements are met. PRESCRIPTIVE COMPLIANCE documentation (form NRCC-LTI-02-E) for the requirements of section 140.6(d) Automatic Daylighting Controls in Secondary Daylit Zones is required.

E. HERS VERIFICATION

This Section Does Not Apply

F. ADDITIONAL REMARKS

Standard Building (Compliance)

Project Name:	12X40 (PC 04-116500) - Wall AC	NRCC-PRF-01-E	Page 3 of 18
Project Address:	Climate Zone 16 Blue Canyon	Calculation Date/Time:	15:09, Wed, Nov 07, 2018
Compliance Scope:	NewComplete	Input File Name:	12X40 PC - CZ16(Wall AC)RR (75)1.cibd16x

G. COMPLIANCE PATH & CERTIFICATE OF COMPLIANCE SUMMARY

Identify which building components use the performance or prescriptive path for compliance. "NA"= not in project

For components that utilize the performance path, indicate the sheet number that includes mandatory notes on plans.

Building Component	Compliance Path		Compliance Forms *(required for submittal)*	Location of Mandatory Notes on Plans
Envelope	☒	Performance	NRCC-PRF-ENV-DETAILS (section of the NRCC-PRF-01-E)	M2.2
	☐	Prescriptive	NRCC-ENV-01 / 02 / 03 / 04 / 05 / 06-E	
	☐	NA		
Mechanical	☒	Performance	NRCC-PRF-MCH-DETAILS (section of the NRCC-PRF-01-E)	M2.2
	☐	Prescriptive	NRCC-MCH-01 / 02 / 03 / 04 / 05 / 06 / 07-E	
	☐	NA		
Domestic Hot Water	☐	Performance	NRCC-PRF-PLB-DETAILS (section of the NRCC-PRF-01-E)	
	☒	Prescriptive	NRCC-PLB-01-E	
	☐	NA		
Lighting (Indoor Conditioned)	☒	Performance	NRCC-PRF-LTI-DETAILS (section of the NRCC-PRF-01-E)	M2.2
	☐	Prescriptive	NRCC-LTI-01 / 02 / 03 / 04 / 05-E	
	☐	NA		
Covered Process: Commercial Kitchens	☐	Performance	S2 (section of the NRCC-PRF-01-E)	
	☐	Prescriptive	NRCC-PRC-01/ 03-E	
	☒	NA		
Covered Process: Computer Rooms	☐	Performance	S3 (section of the NRCC-PRF-01-E)	
	☐	Prescriptive	NRCC-PRC-01/ 04-E	
	☒	NA		
Covered Process: Laboratory Exhaust	☐	Performance	S4 (section of the NRCC-PRF-01-E)	
	☐	Prescriptive	NRCC-PRC-01/ 09-E	
	☒	NA		

Project Name:	12X40 (PC 04-116500) - Wall AC	NRCC-PRF-01-E	Page 4 of 18
Project Address:	Climate Zone 16 Blue Canyon	Calculation Date/Time:	15:09, Wed, Nov 07, 2018
Compliance Scope:	NewComplete	Input File Name:	12X40 PC - CZ16(Wall AC)RR (75)1.cibd16x

G. COMPLIANCE PATH & CERTIFICATE OF COMPLIANCE SUMMARY

The following building components are only eligible for prescriptive compliance. Indicate which are relevant to the project. | *The following building components may have mandatory requirements per Part 6. Indicate which are relevant to the project.*

Yes	NA	Prescriptive Requirement	Compliance Forms	Yes	NA	Mandatory Requirement	Compliance Forms
☒	☐	Lighting (Indoor Unconditioned) §140.6	NRCC-LTI-01 / 02 / 03 / 04 / 05-E	☒ ☐	☐ ☒	Commissioning: §120.8 Simple Systems Complex Systems	NRCC-CXR-01 / 02 / 03 / 05-E NRCC-CXR-01 / 02 / 04 / 05-E
☒	☐	Lighting (Outdoor) §140.7	NRCC-LTO-01 / 02 / 03-E	☒	☐	Electrical: §130.5	NRCC-ELC-01-E
☐	☒	Lighting (Sign) §140.8	NRCC-LTS-01-E	☒	☐	Solar Ready: §110.10	NRCC-SRA-01 / 02-E
☐	☒	Solar Thermal Water Heating: §140.5	NRCC-STH-01-E	☐ ☐ ☐ ☐ ☐	☒ ☒ ☒ ☒ ☒	Covered Process: §120.6 Parking Garage Commercial Refrigeration Warehouse Refrigeration Compressed Air Process Boilers	NRCC-PRC-01-E NRCC-PRC-02-E NRCC-PRC-05-E NRCC-PRC-06/07/08-E NRCC-PRC-10-E NRCC-PRC-11-E

Project Name:	12X40 (PC 04-116500) - Wall AC	NRCC-PRF-01-E	Page 5 of 18
Project Address:	Climate Zone 16 Blue Canyon	Calculation Date/Time:	15:09, Wed, Nov 07, 2018
Compliance Scope:	NewComplete	Input File Name:	12X40 PC - CZ16(Wall AC)RR (75)1.cibd16x

H. CERTIFICATE OF INSTALLATION, CERTIFICATE OF ACCEPTANCE & CERTIFICATE OF VERIFICATION SUMMARY (NRCI/NRCA/NRCV) –

Documentation Author to indicate which Certificates must be submitted for the features to be recognized for compliance
(Retain copies and verify forms are completed and signed to post in field for Field Inspector to verify).
See Tables G. and H. in MCH and LTI Details Sections for Acceptance Tests and forms by equipment.

Building Component	Compliance Forms *(required for submittal)*	Confirmed: Pass	Confirmed: Fail
Envelope	☒ NRCI-ENV-01-E - For all buildings	☐	☐
	☒ NRCA-ENV-02-F- NFRC label verification for fenestration	☐	☐
Mechanical	☒ NRCI-MCH-01-E - For all buildings with Mechanical Systems	☐	☐
	☒ NRCA-MCH-02-A- Outdoor Air	☐	☐
	☒ NRCA-MCH-03-A – Constant Volume Single Zone HVAC	☐	☐
	☐ NRCA-MCH-04-H- Air Distribution Duct Leakage	☐	☐
	☐ NRCA-MCH-05-A- Air Economizer Controls	☐	☐
	☐ NRCA-MCH-06-A- Demand Control Ventilation	☐	☐
	☐ NRCA-MCH-07-A – Supply Fan Variable Flow Controls	☐	☐
	☐ NRCA-MCH-08-A- Valve Leakage Test	☐	☐
	☐ NRCA-MCH-09-A – Supply Water Temp Reset Controls	☐	☐
	☐ NRCA-MCH-10-A- Hydronic System Variable Flow Controls	☐	☐
	☐ NRCA-MCH-11-A – Auto Demand Shed Controls	☐	☐
	☐ NRCA-MCH-12-A- Packaged Direct Expansion Units	☐	☐
	☐ NRCA-MCH-13-A- Air Handling Units and Zone Terminal Units	☐	☐
	☐ NRCA-MCH-14-A- Distributed Energy Storage	☐	☐
	☐ NRCA-MCH-15-A – Thermal Energy Storage	☐	☐
	☐ NRCA-MCH-16-A- Supply Air Temp Reset Controls	☐	☐
	☐ NRCA-MCH-17-A – Condensate Water Temp Reset Controls	☐	☐
	☐ NRCA-MCH-18-A- Energy Management Controls Systems	☐	☐
	☐ NRCV-MCH-04-H- Duct Leakage Test	☐	☐

Project Name:	12X40 (PC 04-116500) - Wall AC	NRCC-PRF-01-E	Page 6 of 18
Project Address:	Climate Zone 16 Blue Canyon	Calculation Date/Time:	15:09, Wed, Nov 07, 2018
Compliance Scope:	NewComplete	Input File Name:	12X40 PC - CZ16(Wall AC)RR (75)1.cibd16x

H. CERTIFICATE OF INSTALLATION, CERTIFICATE OF ACCEPTANCE & CERTIFICATE OF VERIFICATION SUMMARY (NRCI/NRCA/NRCV) –

Documentation Author to indicate which Certificates must be submitted for the features to be recognized for compliance
(Retain copies and verify forms are completed and signed to post in field for Field Inspector to verify).
See Tables G. and H. in MCH and LTI Details Sections for Acceptance Tests and forms by equipment.

Building Component	Compliance Forms *(required for submittal)*	Confirmed: Pass	Confirmed: Fail
Plumbing	☐ NRCI-PLB-01-E - For all buildings with Plumbing Systems	☐	☐
	☐ NRCI-PLB-02-E - required on central systems in high-rise residential, hotel/motel application.	☐	☐
	☐ NRCI-PLB-03-E - Single dwelling unit systems in high-rise residential, hotel/motel application.	☐	☐
	☐ NRCI-PLB-21-E - HERS verified central systems in high-rise residential, hotel/motel application.	☐	☐
	☐ NRCI-PLB-22-E - HERS verified single dwelling unit systems in high-rise residential, hotel/motel application.	☐	☐
	☐ NRCV-PLB-21-H- HERS verified central systems in high-rise residential, hotel/motel application.	☐	☐
	☐ NRCV-PLB-22-H - HERS verified single dwelling unit systems in high-rise residential, hotel/motel application.	☐	☐
	☐ NRCI-STH-01-E - Any solar water heating	☐	☐
Indoor Lighting	☒ NRCI-LTI-01-E - For all buildings	☐	☐
	☐ NRCI-LTI-02-E - Lighting control system, or for an Energy Management Control System (EMCS)	☐	☐
	☐ NRCI-LTI-03-E - Line-voltage track lighting integral current limiter, or for a supplementary overcurrent protection panel used to energize only line-voltage track lighting	☐	☐
	☐ NRCI-LTI-04-E - Two interlocked systems serving an auditorium, a convention center, a conference room, or a theater	☐	☐
	☐ NRCI-LTI-05-E - Lighting Control Credit Power Adjustment Factor (PAF)	☐	☐
	☐ NRCI-LTI-06-E - Additional wattage installed in a video conferencing studio	☐	☐
	☒ NRCA-LTI-02-A - Occupancy sensors and automatic time switch controls.	☐	☐
	☒ NRCA-LTI-03-A - Automatic daylighting controls	☐	☐
	☐ NRCA-LTI-04-A - Demand responsive lighting controls	☐	☐
Outdoor Lighting	☐ NRCI-LTO-01-E – Outdoor Lighting	☐	☐
	☐ NRCI-LTO-02-E- EMCS Lighting Control System	☐	☐
	☒ NRCA-LTO-02-A - Outdoor Lighting Control	☐	☐
Sign Lighting	☐ NRCI-LTS-01-E – Sign Lighting	☐	☐
Electrical	☒ NRCI-ELC-01-E - Electrical Power Distribution	☐	☐
Photovoltaic	☐ NRCI-SPV-01-E Photovoltaic Systems	☐	☐

IDENTIFICATION STAMP
DIV. OF THE STATE ARCHITECT
APP: 01-119031 INC:
REVIEWED FOR
SS ☑ FLS ☑ ACS ☑
DATE: 10/22/2020

PROFESSIONAL STAMP

REGISTERED PROFESSIONAL ENGINEER
MANNY D. FRISCH
No. S3380
STRUCTURAL
STATE OF CALIFORNIA
11.28.2018

THE PLANS, IDEAS & DESIGNS SHOWN ON THESE DRAWINGS ARE THE PROPERTY OF R&S TAVARES ASSOCIATES, INC. DEVISED SOLELY FOR THIS CONTRACT. THESE PLANS SHALL NOT BE USED, IN WHOLE OR IN PART, FOR ANY PURPOSE FOR WHICH THEY WERE NOT INTENDED WITHOUT THE EXPRESS WRITTEN CONSENT OF R&S TAVARES ASSOCIATES, INC. ©

CLIENT
CLASS LEASING LLC
1221 Harley Knox Boulevard
Perris, CA 92571

ORIGINAL PC STATE AGENCY APPROVAL
FILE NUMBER: PC-128
IDENTIFICATION STAMP
DIVISION OF THE STATE ARCHITECT
APP. NO: 04 - 116501 INCR :
AC RM FLS RF SS KR
DATE 2/13/2019

PROJECT TITLE
12' x 40'

PROJECT SPECIFIC STATE AGENCY APPROVAL

Revision Schedule

#	Description	Date

SHEET TITLE
T24 - NRCC-PRF-01-E PERFORMANCE CERTIFICATE

PROJECT NUMBER 17030
DRAWN BY rMc
CHECKED BY RT
DATE 11.28.2018
SHEET NO. M2.0
SHEET OF SHEETS

Proprietary Property of Class Leasing
Proprietary Property of Class Leasing
Proprietary Property of Class Leasing

C:\Users\Cesar\Documents\17030 - Aries, 12x40 Moment Frame PC - MainFile.rvt 04.11.18_Cesar.rvt
5/4/2018 8:38:50 AM

H. CERTIFICATE OF INSTALLATION, CERTIFICATE OF ACCEPTANCE & CERTIFICATE OF VERIFICATION SUMMARY (NRCI/NRCA/NRCV) – Documentation Author to indicate which Certificates must be submitted for the features to be recognized for compliance (Retain copies and verify forms are completed and signed to post in field for Field Inspector to verify). See Tables G. and H. in MCH and LTI Details Sections for Acceptance Tests and forms by equipment.

Building Component	Compliance Forms *(required for submittal)*	Confirmed Pass	Confirmed Fail
Covered Process	☐ NRCI-PRC-01-E Covered Processes	☐	☐
	☐ NRCA-PRC-01-F- Compressed Air Systems	☐	☐
	☐ NRCA-PRC-02-F- Kitchen Exhaust	☐	☐
	☐ NRCA-PRC-03-F- Garage Exhaust	☐	☐
	☐ NRCA-PRC-04-F- Refrigerated Warehouse- Evaporator Fan Motor Controls	☐	☐
	☐ NRCA-PRC-05-F- Refrigerated Warehouse- Evaporative Condenser Controls	☐	☐
	☐ NRCA-PRC-06-F- Refrigerated Warehouse- Air Cooled Condenser Controls	☐	☐
	☐ NRCA-PRC-07F- Refrigerated Warehouse- Variable Speed Compressor	☐	☐
	☐ NRCA-PRC-08-F- Electrical Resistance Underslab Heating System	☐	☐

I. ENVELOPE GENERAL INFORMATION (See NRCC-PRF-ENV-DETAILS for more information)

						Confirmed Pass	Confirmed Fail
1.	Total Conditioned Floor Area	480 ft²	5.	Number of Floors Above Grade	1		
2.	Total Unconditioned Floor Area	0 ft²	6.	Number of Floors Below Grade	0		
3.	Addition Conditioned Floor Area	0 ft²					
4.	Addition Unconditioned Floor Area	0 ft²					

7. Opaque Surfaces & Orientation	8. Total Gross Surface Area	9. Total Fenestration Area	10. Window to Wall Ratio	Pass	Fail
North Wall	400 ft²	0 ft²	00.0%	☐	☐
East Wall	120 ft²	0 ft²	00.0%	☐	☐
South Wall	400 ft²	32 ft²	08.0%	☐	☐
West Wall	120 ft²	0 ft²	00.0%	☐	☐
Total	**1,040 ft²**	**32 ft²**	**03.1%**	☐	☐
Roof	480 ft²	0 ft²	00.0%	☐	☐

J. FENESTRATION ASSEMBLY SUMMARY § 110.6 — Confirmed

1. Fenestration Assembly Name / Tag or I.D.	2. Fenestration Type / Product Type / Frame Type	3. Certification Method[1]	4. Assembly Method	5. Area ft²	6. Overall U-factor	7. Overall SHGC	8. Overall VT	9. Status[2]	Pass	Fail
Sierra Pacific Windows	VerticalFenestration FixedWindow N/A	NFRC Rated	Manufactured	32	0.35	0.24	0.50	N	☐	☐

[1] *Newly installed fenestration shall have a certified NFRC Label Certificate or use the CEC default tables found in Table 110.6-A and Table 110.6-B. Center of Glass (COG) values are for the glass-only, determined by the manufacturer, and are shown for ease of verification. Site-built fenestration values are calculated per Nonresidential Appendix NA6 and are used in the analysis.*
[2] *Status: N - New, A – Altered, E – Existing*

Taking compliance credit for fenestration shading devices? (if "Yes", see NRCC-PRF-ENV-DETAILS for more information) No

K. OPAQUE SURFACE ASSEMBLY SUMMARY § 120.7/ § 140.3 — Confirmed

1. Surface Name	2. Surface Type	3. Area (ft²)	4. Framing Type	5. Cavity R-Value	6. Continuous R-Value	7. U-Factor / F-Factor / C-Factor	8. Status[1]	Pass	Fail
R-19 Wall Metal Stud5	ExteriorWall	1040	Metal	19	4	U-Factor: 0.104	N	☐	☐
R-11 Metal Floor Crawlspa11	ExteriorFlOor	480	Metal	11	NA	U-Factor: 0.091	N	☐	☐
Standing Seam R-30 Metal13	Roof	480	NA	30	NA	U-Factor: 0.072	N	☐	☐

[1] *Status: N - New, A – Altered, E – Existing*

L. ROOFING PRODUCT SUMMARY § 140.3 — Confirmed

1. Product Type	2. Product Density (lb/ft²)	3. Aged Solar Reflectance	4. Thermal Emittance	5. SRI	6. Cool Roof Credit	7. Roofing Product Description	Pass	Fail
Standing Seam R-30 Metal13	2.543	0.08	0.75	NA	No	NA	☐	☐

M. HVAC SYSTEM SUMMARY (see NRCC-PRF-MCH-DETAILS for more information) § 110.1 / § 110.2

Dry System Equipment [1] (Fan & Economizer info included below in Table N) — Confirmed

1. Equip Name	2. Equip Type	3. System Type (Simple [2] or Complex [3])	4. Qty	5. Total Heating Output (kBtu/h)	6. Supp Heat Source (Y/N)	7. Supp Heat Output (kBtuh)	8. Total Cooling Output (kBtu/h)	9. Efficiency: Cooling	9. Efficiency: Heating	10. Acceptance Testing Required? (Y/N) [4]	11. Status[5]	Pass	Fail
AC-1	SPVHP (Packaged1Phase)	Simple	1	20	No	0	21	EER-11.00	COP-3.00	Yes	N	☐	☐

[1] *Dry System Equipment includes furnaces, air handling units, heat pumps, etc.*
[2] *Simple Systems must complete NRCC-CXR-03-E commissioning design review form*
[3] *Complex Systems must complete NRCC-CXR-04-E commissioning design review form*
[4] *A summary of which acceptance tests are applicable is provided in NRCC-PRF-MCH-DETAILS*
[5] *Status: N - New, A – Altered, E – Existing*

Wet System Equipment Section Does Not Apply

Discrepancy between modeled and designed equipment sizing? (if "Yes", see Table F, "Additional Remarks" for an explanation) No

N. ECONOMIZER & FAN SYSTEMS SUMMARY[1] § 140.4 — Confirmed

1. Equip Name	2. Outside Air CFM	3. Supply Fan CFM	3. Supply Fan HP	3. Supply Fan BHP	3. Supply Fan TSP (inch WC)	3. Supply Fan Control	4. Return Fan CFM	4. Return Fan HP	4. Return Fan BHP	4. Return Fan TSP (inch WC)	4. Return Fan Control	5. Economizer Type (if present)	Pass	Fail
AC-1	180	740	0.330	0.330	1.41	ConstantVolume	NA	NA	NA	NA	NA	NoEconomizer	☐	☐

[1] *Mechanical ventilation calculations and exhaust fans are included in the NRCC-PRF-MCH-DETAILS section*

O. EQUIPMENT CONTROLS § 120.2 — Confirmed

1. Equip Name	2. Equip Type	3. Controls	Pass	Fail
AC-1	SPVHP	No DCV Controls No Economizer No Supply Air Temp. Control No Optimum Start No Evaporative Cooler No Heat Recovery	☐	☐

P. SYSTEM DISTRIBUTION SUMMARY § 120.4/ § 140.4(l)

		Dry System Distribution					Confirmed	
1.	2.	3.	4.	5. Ducts: Insulation R-Value	5. Ducts: Location	6. Status[1]	Pass	Fail
Equip Name	Equip Type	Duct Leakage and Sealing Required per 140.4(l)	Duct Leakage will be verified per NA1 and NA2					
AC-1	SPVHP	No	No	8.0	Unconditioned	N	☐	☐

[1] *Status: N - New, E – Existing*

Does the Project Include Zonal Systems? (if "Yes", see NRCC-PRF-MCH-DETAILS for system information)	No
Does the Project Include a Solar Hot Water System? (if "Yes", see NRCC-PRF-MCH-DETAILS for system information)	No
Multifamily or Hotel/ Motel Occupancy? (if "Yes", see NRCC-PRF-MCH-DETAILS for DHW system information)	No

Q. INDOOR CONDITIONED LIGHTING GENERAL INFO (see NRCC-PRF-LTI-DETAILS for more info)[3] § 140.6 — Confirmed

1. Occupancy Type [1]	2. Conditioned Floor Area [2] (ft²)	3. Installed Lighting Power (Watts)	4. Lighting Control Credits (Watts)	5. Additional (Custom) Allowance: Area Category Footnotes (Watts)	5. Additional (Custom) Allowance: Tailored Method (Watts)	Pass	Fail
Classrooms, Lecture, Training, Vocational Areas	480	474	0	0	0	☐	☐
Building Totals:	**480**	**474**	**0**	**0**	**0**		

[3] *See Table 140.6-C*

[2] *See NRCC-LTI-01-E for unconditioned spaces*
[3] *Lighting information for existing spaces modeled is not included in the table*

R. INDOOR CONDITIONED LIGHTING SCHEDULE (Adapted from NRCC-LTI-01-E)[1] § 130.0 — Confirmed

Luminaire Schedule (includes all permanent installed lighting in conditioned space, and portable lighting over 0.3 w/ft² in offices)		Installed Watts (Conditioned)						
Name or Item Tag	Complete Luminaire Description (i.e., 3-lamp fluorescent troffer, F32T8, one dimmable electronic ballast)	Watts per luminaire	How Wattage is Determined: CEC Default from NA8	How Wattage is Determined: According to §130.0(c)	Total Number Luminaires	Installed Watts	Pass	Fail
L-1	3 Lamp 4 ft T8 Energy Savings Elec	79	Yes	No	6	474	☐	☐

[2] *If lighting power densities were used in the compliance model Building Departments will need to check prescriptive forms for Luminaire Schedule details.*

S1. COVERED PROCESS SUMMARY – ENCLOSED PARKING GARAGES § 140.9
This Section Does Not Apply

S2. COVERED PROCESS SUMMARY – COMMERCIAL KITCHENS § 140.9
This Section Does Not Apply

S3. COVERED PROCESS SUMMARY – COMPUTER ROOMS § 140.9
This Section Does Not Apply

S4. COVERED PROCESS SUMMARY – LABORATORY EXHAUSTS § 140.9
This Section Does Not Apply

T. UNMET LOAD HOURS
This Section Does Not Apply

U. ENERGY USE SUMMARY

Energy Component	Standard Design Site (MWh)	Proposed Design Site (MWh)	Margin (MWh)	Standard Design Site (MBtu)	Proposed Design Site (MBtu)	Margin (MBtu)
Space Heating	--	2.6	--	14.2	--	--
Space Cooling	0.6	0.7	-0.1	--	--	--

U. ENERGY USE SUMMARY

Energy Component	Standard Design Site (MWh)	Proposed Design Site (MWh)	Margin (MWh)	Standard Design Site (MBtu)	Proposed Design Site (MBtu)	Margin (MBtu)
Indoor Fans	2.8	1.7	1.1	--	--	--
Heat Rejection	--	--	--	--	--	--
Pumps & Misc.	--	--	--	--	--	--
Domestic Hot Water	--	--	--	3.5	3.5	0.0
Indoor Lighting	1.2	1.0	0.2	--	--	--
COMPLIANCE TOTAL	**4.6**	**6.0**	**-1.4**	**17.7**	**3.5**	**14.2**
Receptacle	1.3	1.3	0.0	--	--	--
Process	--	--	--	--	--	--
Other Ltg	--	--	--	--	--	--
Process Motors	--	--	--	--	--	--
TOTAL	**5.9**	**7.3**	**-1.4**	**17.7**	**3.5**	**14.2**

APPROVED

DOCUMENTATION AUTHOR'S DECLARATION STATEMENT § 10-103

I certify that this Certificate of Compliance documentation is accurate and complete.

Documentation Author Name: LAL B. SAHGAL	Signature: Lal Sahgal
Company: LSA CONSULTING ENGINEERS	
Address: 83, WINDSWEPT WAY	Signature Date: 11-7-18
City/State/Zip: MISSION VIEJO CA. 92692	CEA Identification (If applicable): M26885
Phone: (949)830-4746	

RESPONSIBLE PERSON'S DECLARATION STATEMENT

I certify the following under penalty of perjury, under the laws of the State of California:

1	I hereby affirm that I am eligible under the provisions of Division 3 of the Business and Professions Code to sign this document as the person responsible for its preparation; and that I am licensed in the State of California as a civil engineer, mechanical engineer, electrical engineer, or I am a licensed architect.
2	I affirm that I am eligible under the provisions of Division 3 of the Business and Professions Code by section 5537.2 or 6737.3 to sign this document as the person responsible for its preparation; and that I am a licensed contractor performing this work.
3	I affirm that I am eligible under Division 3 of the Business and Professions Code to sign this document because it pertains to a structure or type of work described as exempt pursuant to Business and Professions Code Sections 5537, 5538 and 6737.1.

Responsible Envelope Designer Name: Manny D. Frisch	**Signature:** Manny D. Frisch	
Company: R & S Tavares Associates		
Address: 11777 Bernardo Plaza Ct. #105	Date Signed: 11-7-2018	
City/State/Zip: San Diego Ca. 92128	Declaration Statement Type:	
Phone: 858-444-3344 ext. 1810	Title:	License #: S3380
Responsible Lighting Designer Name: Ralph M. Tavares	**Signature:**	
Company: R & S Tavares Associates		
Address: 11777 Bernardo Plaza Ct. #105	Date Signed: 11-7-2018	
City/State/Zip: San Diego Ca. 92128	Declaration Statement Type:	
Phone: 858-444-3344 ext. 1801	Title:	License #: 60484
Responsible Mechanical Designer Name: Lal Sahgal	**Signature:** Lal Sahgal	
Company: LSA Consulting Engineers		
Address: 83, Windswept Way	Date Signed: 11-7-18	
City/State/Zip: Mission Viejo Ca. 92692	Declaration Statement Type:	
Phone: 949-830-4746	Title:	License #: M26885

IDENTIFICATION STAMP
DIV. OF THE STATE ARCHITECT
APP: 01-119031 INC:
REVIEWED FOR
SS ☑ FLS ☑ ACS ☑
DATE: 10/22/2020

PROFESSIONAL STAMP

REGISTERED PROFESSIONAL ENGINEER MANNY D. FRISCH No. S3380 STRUCTURAL STATE OF CALIFORNIA
11.28.2018

THE PLANS, IDEAS & DESIGNS SHOWN ON THESE DRAWINGS ARE THE PROPERTY OF R&S TAVARES ASSOCIATES, INC. DEVISED SOLELY FOR THIS CONTRACT. THESE PLANS SHALL NOT BE USED, IN WHOLE OR IN PART, FOR ANY PURPOSE FOR WHICH THEY WERE NOT INTENDED WITHOUT THE EXPRESS WRITTEN CONSENT OF R&S TAVARES ASSOCIATES, INC. ©

CLIENT

CLASS LEASING LLC
1221 Harley Knox Boulevard
Perris, CA 92571

ORIGINAL PC STATE AGENCY APPROVAL
FILE NUMBER: PC-128
IDENTIFICATION STAMP
DIVISION OF THE STATE ARCHITECT
APP. NO: 04 - 116501 INCR :
AC RM FLS RF SS KR
DATE 2/13/2019

PROJECT TITLE
12' x 40'

PROJECT SPECIFIC STATE AGENCY APPROVAL

Revision Schedule

#	Description	Date

SHEET TITLE
T24 - NRCC-PRF-01-E
PERFORMANCE CERTIFICATE

PROJECT NUMBER
17030

DRAWN BY
rMc

CHECKED BY
RT

DATE
11.28.2018

SHEET NO.
M2.1
SHEET OF SHEETS

Proprietary Property of Class Leasing

5/4/2018 8:38:55 AM C:\Users\Cesar\Documents\17030 - Aries, 12x40 Moment Frame PC - MainFile.rvt 04.11.18_Cesar.rvt

NRCC-PRF-ENV-DETAILS -SECTION START-

A. OPAQUE SURFACE ASSEMBLY DETAILS — Confirmed

1. Surface Name	2. Surface Type	3. Description of Assembly Layers	4. Notes	Pass	Fail
R-19 Wall Metal Stud5	ExteriorWall	Stucco - 7/8 in. Vapor permeable felt - 1/8 in. Metal framed wall, 16in. OC, S.Sin., R-19 Gypsum Board - 1/2 in. Expanded Polystyrene - EPS - 1 in. R4.2		☐	☐
R-11 Metal Floor Crawlspa11	ExteriorFloor	Concrete - 140 lb/ft3 - 4 in. Metal framed floor, 24in. OC, S.Sin., R-11 Plywood - 1/2 in. Carpet - 3/4 in.		☐	☐
Standing Seam R-30 Metal13	Roof	Metal Standing Seam - 1/16 in. Metal standing seam roof, R-30		☐	☐

B. OVERHANG DETAILS (Adapted from NRCC-ENV-02-E)

This Section Does Not Apply

C. OPAQUE DOOR SUMMARY

This Section Does Not Apply

NRCC-PRF-MCH-DETAILS -SECTION START-

A. MECHANICAL VENTILATION AND REHEAT *(Adapted from 2016-NRCC-MCH-03-E)* — Confirmed

1. DESIGN AIR FLOWS								2. VENTILATION (§ 120.1)												
CONDITIONED ZONE NAME	HEATING/COOLING SYSTEM ID	DESIGN PRIMARY AIR FLOW (CFM)	DESIGN PRIMARY MINIMUM AIR FLOW (CFM)	MINIMUM PRIMARY AIR FLOW FRACTION	MAXIMUM HEATING AIR FLOW (CFM)	MAXIMUM HEATING AIR FLOW FRACTION	DDC CONTROL (Y/N)	VENT SYSTEM ID	CONDITIONED AREA (ft2)	MIN. VENT PER AREA (CFM/ft2)	DESIGN NUM. OF PEOPLE	MIN. VENT PER PERSON (CFM/person)	REQ'D VENT AIR FLOW (CFM)	DESIGN VENT AIR FLOW (CFM)	TRANSFER AIRFLOW (CFM)	DCV (Y/N)	Operable Window Interlock & 140.4(n) (Y/N)	Pass	Fail
1-First Floor	AC-1	740	NA	0.00	NA	NA	N	AC-1	480	NA	12.00	15.00	180	180	NA	N	NA	☐	☐
								TOTAL	480		12.00		180	180	NA			☐	☐

B. ZONAL SYSTEM AND TERMINAL UNIT SUMMARY — § 140.4

1. System ID	2. System Type	3. Qty	4. Rated Capacity (kBtuh) Heating	4. Rated Capacity (kBtuh) Cooling	5. Economizer	6. Zone Name	7. Airflow (cfm) Design	7. Airflow (cfm) Min.	7. Airflow (cfm) Min. Ratio	8. Fan BHP	8. Fan Cycles	8. Fan ECM Motor	Confirmed Pass	Confirmed Fail
1-First Floor-Trm	Uncontrolled	1	NA	NA	NA	1-First Floor	740	NA	0.00	NA	NA	☐	☐	☐

C. EXHAUST FAN SUMMARY

This Section Does Not Apply

D. DHW EQUIPMENT SUMMARY – *(Adapted from NRCC-PLB-01)*

This Section Does Not Apply

E. MULTI-FAMILY CENTRAL DHW SYSTEM DETAILS

This Section Does Not Apply

F. SOLAR HOT WATER HEATING SUMMARY (Adapted from NRCC-STH-01)

This Section Does Not Apply

G. MECHANICAL HVAC ACCEPTANCE TESTS & FORMS *(Adapted from 2016-NRCC-MCH-01-E)* — § RA4

Declaration of Required Acceptance Certificates (NRCA) – Acceptance Certificates that may be submitted. (Retain copies and verify forms are completed and signed to post in field for Field Inspector to verify).

Test Description: Equipment Requiring Testing or Verification	# of units	MCH-02A Outdoor Air	MCH-03A Single Zone Unitary	MCH-04A Air Dist. Ducts	MCH-05A Economizer Controls	MCH-06A DCV	MCH-07A Supply Fan VAV	MCH-08A Valve leakage	MCH-09A Supply Water Temp. Reset	MCH-10A Hyd. Variable Flow Control	MCH-11A Auto Demand Shed Control	MCH-12A FDD for DX Units	MCH-13A Auto FDD for Air & Zone	MCH-14A Dist. Energy Storage DX AC	MCH-15A TES Systems	MCH-16A Supply Air Temp. Reset	MCH-17A Condenser Water Reset Controls	MCH-18A ECMS	Confirmed Pass	Confirmed Fail
AC-1	1	X	X	--	--	--	--	--	--	--	--	--	--	--	--	--	--	--	☐	☐

H. EVAPORATIVE COOLER SUMMARY

This Section Does Not Apply

NRCC-PRF-LTI-DETAILS -SECTION START-

A. INDOOR CONDITIONED LIGHTING CONTROL CREDITS (Adapted from NRCC-LTI-02-E) — § 140.6

This Section Does Not Apply

B. INDOOR CONDITIONED LIGHTING MANDATORY LIGHTING CONTROLS (Adapted from NRCC-LTI-02-E) — § 130.1

This Section Does Not Apply

§130.1(a) = Manual area controls; §130.0(b) = Multi Level; §130.1(c) = Auto Shut-Off; §130.1(d) = Mandatory Daylight; §130.1(e) = Demand Responsive

C. TAILORED METHOD CONDITIONED LIGHTING POWER ALLOWANCE SUMMARY AND CHECKLIST (Adapted from NRCC-LTI-04-E) — § 140.6

General lighting power (see Table D)	0

C. TAILORED METHOD CONDITIONED LIGHTING POWER ALLOWANCE SUMMARY AND CHECKLIST (Adapted from NRCC-LTI-04-E) — § 140.6

General lighting power from special function areas (see Table E)	NA
Additional "use it or lose it" (See Table G)	0
Total watts	0

D. GENERAL LIGHTING POWER (Adapted from NRCC-LTI-04-E) — § 140.6-D

This Section Does Not Apply

E. GENERAL LIGHTING FROM SPECIAL FUNCTION AREAS (Adapted from NRCC-LTI-04-E) — § 140.6(c) 3H

Room Number	Primary Function Area	Illuminance Value (LUX)	Room Cavity Ratio (Table G)	Allowed LPD	Floor Area (ft²)	Allowed Watts	Confirmed Pass	Confirmed Fail
NA	NA	NA	NA	NA	NA	NA	☐	☐

Note: Tailored Method for Special Function Areas is not currently implemented

F. ROOM CAVITY RATIO (Adapted from NRCC-LTI-04-E)

Rectangular Spaces

Room Number	Task/Activity Description	Room Length (ft)	Room Width (ft)	Room Cavity Height (ft)	RCR	Confirmed Pass	Confirmed Fail
NA	NA	NA	NA	NA	NA	☐	☐

Non-Rectangular Spaces

This Section Does Not Apply

Note: All applicable spaces are listed under the Non-Rectangular Spaces table

G. ADDITIONAL "USE IT OR LOSE IT" (Adapted from NRCC-LTI-04-E)

1. Wall Display	2. Combined Floor Display and Task Lighting	3. Combined Ornamental and Special Effects Lighting	4. Very Valuable Merchandise	Allowed Watts	Confirmed Pass	Confirmed Fail
0	0	0	0	**0**	☐	☐

5. Wall Display

This Section Does Not Apply

6. Floor Display and Task Lighting

This Section Does Not Apply

7. Combined Ornamental and Special Effects Lighting

This Section Does Not Apply

8. Very Valuable Merchandise

This Section Does Not Apply

H. INDOOR & OUTDOOR LIGHTING ACCEPTANCE TESTS & FORMS (Adapted from NRCC-LTI-01-E and NRCC-LTO-01-E) — § 130.4

Declaration of Required Acceptance Certificates (NRCA) –Acceptance Certificates that must be verified in the field. (Retain copies and verify forms are completed and signed to post in field for Field Inspector to verify).

Test Description: Equipment Requiring Testing or Verification	# of units	Indoor NRCA-LTI-02-A	Indoor NRCA-LTI-03-A Auto Daylight	Indoor NRCA-LTI-04-A Demand Responsive	Outdoor NRCA-LTO-02-A Outdoor Controls	Confirmed Pass	Confirmed Fail
Occupant Sensors	0	☒	☐	☐	☐	☐	☐
Automatic Time Switch	0	☒	☐	☐	☐	☐	☐
Automatic Daylighting	0	☐	☒	☐	☐	☐	☐
Demand Responsive	0	☐	☐	☐	☐	☐	☐
Outdoor Controls	0	☐	☐	☐	☐	☐	☐

APPROVED
DIVISION OF STATE ARCHITECT
HIGH PERFORMANCE SECTION
APP # 04-116500 DATE 11/7/2018

ENVELOPE MANDATORY MEASURES: NONRESIDENTIAL — ENV-MM

Project Name	Date
12X40 (PC 04-116500) - Wall AC	*11/7/2018*

DESCRIPTION

Building Envelope Measures:

§110.8(a):	Installed insulating material shall have been certified by the manufacturer to comply with the California Quality Standards for insulating material, Title 20 Chapter 4, Article 3.
§110.8(c):	All Insulating Materials shall be installed in compliance with the flame spread rating and smoke density requirements of Sections 2602 and 707 of Title 24, Part 2.
§110.8(g):	Heated slab floors shall be insulated according to the requirements in Table 110.8-A.
§110.7(a):	All Exterior Joints and openings in the building that are observable sources of air leakage shall be caulked, gasketed, weatherstripped or otherwise sealed.
§110.6(a):	Manufactured fenestration products and exterior doors shall have air infiltration rates not exceeding 0.3 cfm/ft.² of window area, 0.3 cfm/ft.² of door area for residential doors, 0.3 cfm/ft.² of door area for nonresidential single doors (swinging and sliding), and 1.0 cfm/ft.² for nonresidential double doors (swinging).
§110.6(a):	Fenestration U-factor shall be rated in accordance with NFRC 100, or the applicable default U-factor.
§110.6(a) :	Fenestration SHGC shall be rated in accordance with NFRC 200, or NFRC 100 for site-built fenestration, or the applicable default SHGC.
§110.6(b):	Site Constructed Doors, Windows and Skylights shall be caulked between the unit and the building, and shall be weatherstripped (except for unframed glass doors and fire doors).
§120.7(a):	The opaque portions of the roof/ceiling that separates conditioned spaces from unconditioned spaces or ambient air shall meet the applicable U-Factor requirements as follows: **Metal Building-** The weighted average U-factor of the roof assembly shall not exceed 0.098. **Wood Framed and Others-** The weighted average U-factor of the roof assembly shall not exceed 0.075.
§120.7(b):	The opaque portions of walls that separate conditioned spaces from unconditioned spaces or ambient air shall meet the applicable U-factor as follows: **Metal Building-** The weighted average U-factor of the wall assembly shall not exceed 0.113. **Metal Framed-** The weighted average U-factor of the wall assembly shall not exceed 0.151. **Light Mass Walls-** A 6 inch or greater Hollow Core Concrete Masonry Unit shall have a U-factor not to exceed 0.440. **Heavy Mass Walls-** An 8 inch or greater Hollow Core Concrete Masonry Unit shall have a U-factor not to exceed 0.690. **Wood Framed and Others-** The weighted average U-factor of the wall assembly shall not exceed 0.110. **Spandrel Panels and Opaque Curtain Wall-** The weighted average U-factor of the spandrel panels and opaque curtain wall assembly shall not exceed 0.280. **Demising Walls-**. The opaque portions of framed demising walls shall meet the requirements of Item A or B below: A. Wood framed walls shall be insulated to meet a U-factor not greater than 0.099. B. Metal Framed walls shall be insulated to meet a U-factor not greater than 0.151.
§120.7(c):	The opaque portions of floors and soffits that separate conditioned spaces from unconditioned spaces or ambient air shall meet the applicable U-Factor requirements as follows: **Raised Mass Floors-** Shall have a minimum of 3 inches of lightweight concrete over a metal deck or the weighted average U-factor of the floor assembly shall not exceed 0.269. **Other Floors-**The weighted average U-factor of the floor assembly shall not exceed 0.071.

MECHANICAL MANDATORY MEASURES: NONRESIDENTIAL

Project Name:	Date:
12' x 40' - SW/MF (PC 04-116500)	*11/7/2018*

DESCRIPTION

Building Measures:

110.2(b)	Heat pumps with supplementary heater electric resistance heaters shall have controls: 1- That prevent supplementary heater operation when the heating load can be met by the heat pump alone; and 2- In which the cut-on temperature for compression heating is higher than the cut-on temperature for supplementary heating, and the cut-off temperature for compression heating is higher than the cut-off temperature for supplementary heating.
120.1(c)3	The minimum rate of outdoor air required per section 120.1(b) 2 shall be supplied to each space at all time the space is usually occupied.
120.1(c)2	The lesser of the minimum rate of outdoor air required by Sec. 120.1(b)2, or three complete air changes shall be supplied to the entire building during the one-hour period immediately before the building is normally occupied.
120.2(c)	Hotel/Motel Guest Room Thermostats shall have numeric temperature set points in degrees F; and set point stops accessible only to authorized personnel, to restrict over-heating and over-
120.4(a)	All air distribution system ducts and plenums, including, but not limited to, building cavities, mechanical closets, air-handler boxes and support platforms used as ducts or plenums, shall be installed, sealed and insulated to meet the requirements of chapter 6 of the 2001 CMC. Supply-air and return-air ducts conveying heated or cooled air shall be insulated to a minimum installed level of R-8, unless ducts are in conditioned space.
120.2(a) & (b)	The thermostatic controls for HVAC systems shall meet the following requirements as applicable: a) Each space conditioning zone shall be controlled by an individual thermostatic control that responds to temperature within the zone and meets the applicable requirements of Subsection (b). b) Each Thermostatic control required by Subsection (a) shall be capable of being set locally or remotely by adjustment or selection of sensors to control: 1) Comfort heating down to 55°F or lower, 2) Comfort Cooling up to 85°F or higher, 3) Both heating and cooling, the thermostatic controls shall be capable of providing a temperature range or dead band of at least 5°F within which the supply of heating and cooling energy to the zone is shut off or reduced to a minimum.
120.2(f)	Outdoor air supply and exhaust equipment shall be installed with dampers that automatically close upon fan shutdown.
120.1(c)4	Demand Control Ventilation Devices (CO2 sensors) shall be installed.
120.2(e)	Each space-conditioning system shall be installed with controls that comply with Items 1 and 2 below: 1) Are capable of automatically shutting off the system during periods of non-use and shall have: a) An automatic time switch control device complying with Sec. 119(c), with an accessible manual override that allows operation of the system for up to 4 hours; or b) An occupancy sensor; or c) A four-hour timer that can be manually operated. d) EXCEPTION: Mechanical systems serving retail stores and associated malls, restaurants, grocery stores, churches, and theaters equipped with 7-day programmable timers. 2) Automatically restart and temporarily operate the system as required to maintain: a) A serback heating thermostat set point, if the system provides mechanical heating; and EXCEPTION: Area with the design winter outdoor temperature of greater than 32°F, b) A setup cooling thermostat set point, if the system provides mechanical cooling. EXCEPTION: Area with the design summer outdoor temperature of less than 100°F, EXCEPTION: Systems serving hotel/motel guest rooms, if they have a readily accessible manual shut-off switch.
120.3	The piping for all space conditioning and service water heating systems shall be insulated in accordance with table 123-A
110.3(b)	Service water heating systems and equipment shall meet the applicable requirements of the Appliance Efficiency Regulations as required by Sec. 110.1
110.3(c)2	Service hot water systems with circulating pumps or with electrical heat trace systems shall be capable of automatically turning off thte system.
110.3(c)3	Lavatories in public restrooms shall have controls that limit the water supply temperature to

IDENTIFICATION STAMP
DIV. OF THE STATE ARCHITECT
APP: 01-119031 INC:
REVIEWED FOR
SS ☑ FLS ☑ ACS ☑
DATE: 10/22/2020

PROFESSIONAL STAMP

REGISTERED PROFESSIONAL ENGINEER
RICHARD D. TAYLOR
No. S3380
STRUCTURAL
STATE OF CALIFORNIA
11.28.2018

THE PLANS, IDEAS & DESIGNS SHOWN ON THESE DRAWINGS ARE THE PROPERTY OF R&S TAVARES ASSOCIATES, INC. DEVISED SOLELY FOR THIS CONTRACT. THESE PLANS SHALL NOT BE USED, IN WHOLE OR IN PART, FOR ANY PURPOSE FOR WHICH THEY WERE NOT INTENDED WITHOUT THE EXPRESS WRITTEN CONSENT OF R&S TAVARES ASSOCIATES, INC. ©

CLIENT

CLASS LEASING LLC
1221 Harley Knox Boulevard
Perris, CA 92571

ORIGINAL PC STATE AGENCY APPROVAL

FILE NUMBER: PC-128
IDENTIFICATION STAMP
DIVISION OF THE STATE ARCHITECT
APP. NO: 04 - 116501 INCR :
AC RM FLS RF SS KR
DATE 2/13/2019

PROJECT TITLE

12' x 40'

PROJECT SPECIFIC STATE AGENCY APPROVAL

Revision Schedule

#	Description	Date

SHEET TITLE

T24 - NRCC-PRF-01-E
PERFORMANCE CERTIFICATE

PROJECT NUMBER

17030

DRAWN BY

rMc

CHECKED BY

RT

DATE

11.28.2018

SHEET NO.

M2.2

SHEET OF SHEETS

Proprietary Property of Class Leasing

5/4/2018 8:38:59 AM C:\Users\Cesar\Documents\17030 - Aries, 12x40 Moment Frame PC - MainFile.rvt 04.11.18_Cesar.rvt

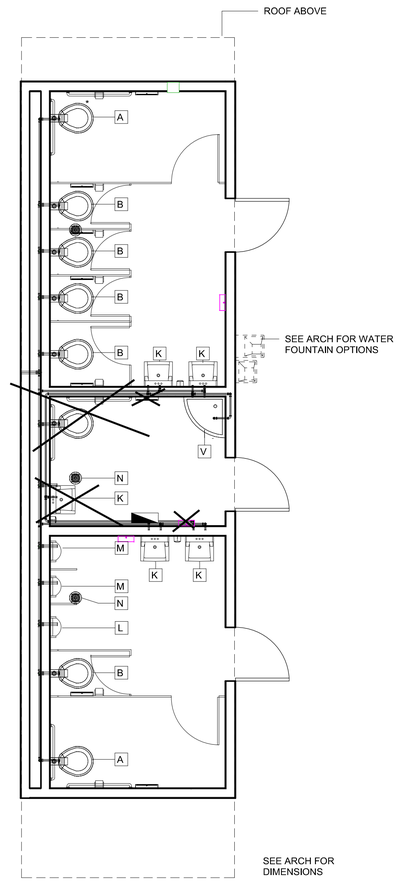

1 *1/4" = 1'-0"*
12x40 Plumbing Plan Option 2 (A)

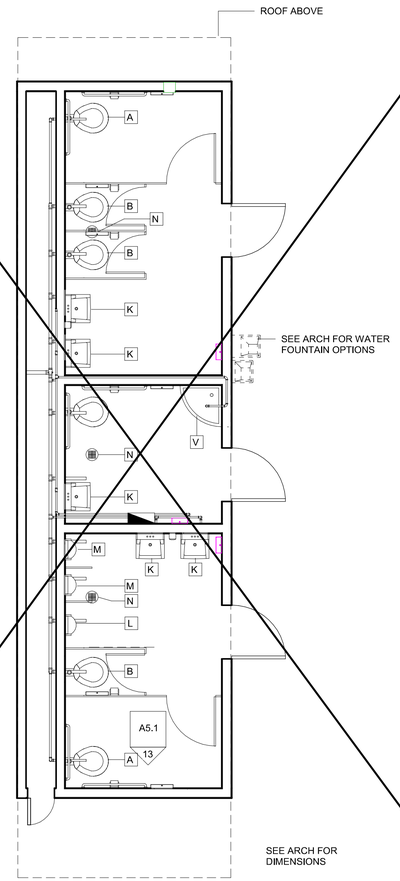

2 *1/4" = 1'-0"*
12x40 Plumbing Plan Option 2 (B)

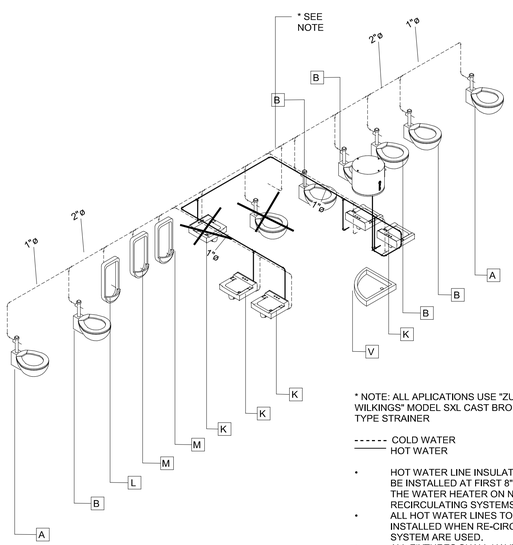

* NOTE: ALL APLICATIONS USE "ZURN-WILKINGS" MODEL SXL CAST BRONZE "Y" TYPE STRAINER

------ COLD WATER
——— HOT WATER

- HOT WATER LINE INSULATION TO BE INSTALLED AT FIRST 8" FROM THE WATER HEATER ON NON-RECIRCULATING SYSTEMS
- ALL HOT WATER LINES TO BE INSTALLED WHEN RE-CIRCULATING SYSTEM ARE USED.
- ALL FIXTURES SHALL HAVE SGUT-OFF VALVES
- COPPER TO BE TYPE "L"
  DEV. LENGHT = 40 FT. MAX
  40 TO 60 PSI PRESSURE RANGE

4 ***Plumbing Option 2 (A)***

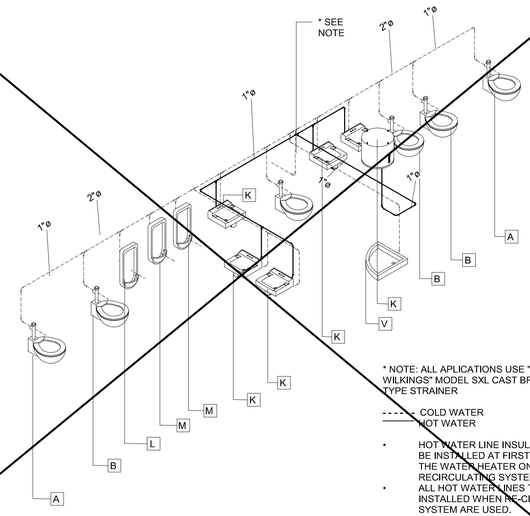

* NOTE: ALL APLICATIONS USE "ZURN-WILKINGS" MODEL SXL CAST BRONZE "Y" TYPE STRAINER

------ COLD WATER
——— HOT WATER

- HOT WATER LINE INSULATION TO BE INSTALLED AT FIRST 8" FROM THE WATER HEATER ON NON-RECIRCULATING SYSTEMS
- ALL HOT WATER LINES TO BE INSTALLED WHEN RE-CIRCULATING SYSTEM ARE USED.
- ALL FIXTURES SHALL HAVE SGUT-OFF VALVES
- COPPER TO BE TYPE "L"
  DEV. LENGHT = 40 FT. MAX
  40 TO 60 PSI PRESSURE RANGE

5 ***Plumbing Option 2 (B)***

FIXTURE SCHEDULE

	TAG	FIXTURE	FIXTURE DESCRIPTION AS SPECIFIED OR APPROVED EQUAL	PIPE SIZE COLD WATER	PIPE SIZE HOT WATER	PIPE SIZE WASTE	PIPE SIZE VENT
WATER CLOSETS ASME A112.19.2	A & B	[AGE 9 TO ADULT] WATER CLOSET WALL MTD/FLUSH "A" ACCESSIBLE & "B" NON-ACCESSIBLE	*PROFLO PF1731WH* Color/Finish White CSA Certified Yes Flow Rate 1.28 gpf Maximum Material Vitreous China Toilet/Urinal Installation Wall Mount Toilet Type One Piece WaterSense Labeled No	1"	N/A	3"	2"
	C	[AGE 9 - 12] WATER CLOSET FLOOR MTD/FLUSH ACCESSIBLE	*PROFLO PF1723* Color/Finish White CSA Certified CSA B45.1 Flow Rate 1.28 gpf Maximum Height 17 in Material Vitreous China Toilet Type One Piece	1"	N/A	3"	2"
	D & E	[AGE 9 - 12] WATER CLOSET FLOOR MTD/FLUSH ACCESSIBLE	*PROFLO PF1721* ADA Compliant Yes Color/Finish White CSA Certified CSA B45.1 08 Flow Rate 1.28 gpf Maximum Material Vitreous China Toilet Type Two Piece WaterSense Labeled No	1"	N/A	3"	2"
	F	[AGE 3 - 4] WATER CLOSET FLOOR MTD/FLUSH ACCESSIBLE & NON-ACCESSIBLE	*PROFLO 1700BBWH* ASME Specifications ASME A112.19.2 Color/Finish White Flow Rate 1.28 gpf Maximum Material Vitreous China Toilet Bowl Shape Round Toilet Type One Piece WaterSense Labeled No	1"	N/A	3"	2"
	G	[AGE 9 TO ADULT] WATER CLOSET TANK TYPE ACCESSIBLE	*PROFLO PF9403WH* ASME Specifications ASME A112.19.2M Collection 9400 Series Color/Finish White Flow Rate 1.28 gpf Maximum Handle Type Trip Lever Material Vitreous China Toilet Bowl Shape Elongated Toilet Type Two Piece WaterSense Labeled Yes	1/2"	N/A	2"	2"
	H	[AGE 5 - 12] WATER CLOSET TANK TYPE ACCESSIBLE	*PROFLO PF9401WH* Color/Finish White Flow Rate 1.28 gpf Maximum Green WaterSense Handle Type Trip Lever Material Vitreous China Toilet Bowl Shape Elongated Toilet Type Two Piece WaterSense Labeled Yes Width 18 5/8 in	1/2"	N/A	3"	2"
	I	[AGE 9 - 12] WATER CLOSET TANK TYPE NON-ACCESSIBLE	*PROFLO PF9401WH* Color/Finish White Flow Rate 1.28 gpf Maximum Green WaterSense Handle Type Trip Lever Material Vitreous China Toilet Bowl Shape Elongated Toilet Type Two Piece WaterSense Labeled Yes Width 18 5/8 in	1/2"	N/A	3"	2"
	J	[AGE 3 - 4] WATER CLOSET TANK TYPE ACCESSIBLE & NON-ACCESSIBLE	*PROFLO PF1704BB* Color/Finish White Flow Rate 1.28 gpf Maximum Material Vitreous China Toilet Type Two Piece WaterSense Labeled No	1/2"	N/A	3"	2"
	K	LAVATORY ACCESSIBLE	*AMERICAN STANDARD 0355.012 LUCERNE* Material Vitreous China Flow rate 0.5 gpm Maximum Single Handle Faucet American Standard 9141.011 To be used @ Kinder applications only	1/2"	N/A	2"	1 1/2"
	L	URINAL ACCESSIBLE	*PROFLO PF1805WH* Collection 1800 Series Color/Finish White Color/Finish Category Whites Flow Rate .125 gpf Maximum Material Vitreous China Toilet/Urinal Installation Wall Mount WaterSense Labeled No	3/4"	N/A	2"	1 1/2"
	M	URINAL NON-ACCESSIBLE	*PROFLO PF1805WH* Collection 1800 Series Color/Finish White Color/Finish Category Whites Flow Rate .125 gpf Maximum Material Vitreous China Toilet/Urinal Installation Wall Mount WaterSense Labeled No	3/4"	N/A	2"	1 1/2"
	N	FLOOR DRAIN	*JAY R SMITH #2005YA-02-P050-NB* Floor Drain for Primer 5" Material Nickel Bronze Straine w/ 1/4" MAX OPENINGS	-	N/A	2"	1 1/2"
	O	TRAP PRIMER	***PR-500*** w/ 8"x12" Lockable Box 1/2" Ball Shut-off Valve PPP DU-U FRESH Water Distribution System	1/2"	N/A	N/A	N/A
	Q	WATER HAMMER ARRESTOR	*PPP SC-1000*	1"	N/A	N/A	N/A
	R	GRAB BAR	*McKINNEY 9704-1-1/2 OC* Material Satin Finish; 36" long on back and 42" on side	-	N/A	N/A	N/A
	S	MIRROR	*SERIES 530 RETURNED* Mirrors Stainless Steel 18GA 18"x24" - "J" Sheet Metal Manufactered or Approved Equal	-	N/A	N/A	N/A
	T	TOILET PARTITION	*METAL POWDER COATED*	-	N/A	N/A	N/A
	U	SERVICE SINK	*KOHLER K-6714 "BANNON" 22"x18"* Finish Cast Iron, Acid Resist K-8905-RP Faucet K-6672 2" I.P.S, Trap	1/2"	1/2"	2"	1 1/2"
	V	MOP SINK	*KOHLER K-6710 "WHITBY" 28"x28"* Finish Cast Iron Faucet Chicago 956-R, 853 Wall hook, 2" K-9142 Strainer	1/2"	1/2"	2"	1 1/2"
	W	CLASSROOM SINK	*JUST CRA-1725-A-GR 17"x25"* w/ 4 1/2" BOWL Depth 4 1/2" BOWL, Faucet #350 Chicago Bubbler JSB-10	1/2"	1/2"	2"	1 1/2"
	X	WATER HEATER OPTION	☐ A.O. SMITH #DEL-6 6 GALLON ☐ A.O. SMITH #DEL-10 10 GALLON SEE SHEET 7 / A3.1 , 9 / A3.1	3/4"	3/4"	N/A	N/A
	Y	INSTANT WATER HEATER OPTION	EEMAX #SP3012, 120V, 3.0KW, 25A	1/2"	1/2"	N/A	N/A

NOTE: SEE SHEET A3.1 FOR ACCESSIBILITY AND MOUNTING HEIGHT DETAILS
SEE 4/M0.1 EQUIPMENT ANCHORAGE FOR NOTES

3 *1/4" = 1'-0"*
PLUMBING FIXTURE SYMBOL

IDENTIFICATION STAMP
DIV. OF THE STATE ARCHITECT
APP: 01-119031 INC:
REVIEWED FOR
SS ☑ FLS ☑ ACS ☑
DATE: 10/22/2020

PROFESSIONAL STAMP

REGISTERED PROFESSIONAL ENGINEER
RICHARD D. FISH
No. S3380
STRUCTURAL
STATE OF CALIFORNIA
11.28.2018

THE PLANS, IDEAS & DESIGNS SHOWN ON THESE DRAWINGS ARE THE PROPERTY OF R&S TAVARES ASSOCIATES, INC. DEVISED SOLELY FOR THIS CONTRACT. THESE PLANS SHALL NOT BE USED, IN WHOLE OR IN PART, FOR ANY PURPOSE FOR WHICH THEY WERE NOT INTENDED WITHOUT THE EXPRESS WRITTEN CONSENT OF R&S TAVARES ASSOCIATES, INC. ©

CLIENT

CLASS LEASING LLC
1221 Harley Knox Boulevard
Perris, CA 92571

ORIGINAL PC STATE AGENCY APPROVAL

FILE NUMBER: PC-128
IDENTIFICATION STAMP
DIVISION OF THE STATE ARCHITECT
APP. NO: 04 - 116501 INCR :
AC RM FLS RF SS KR
DATE 2/13/2019

PROJECT TITLE
12' x 40'

PROJECT SPECIFIC STATE AGENCY APPROVAL

Revision Schedule

#	Description	Date

SHEET TITLE
12x40 SUPPLY & ISO OPTION 2 (A) (B)

PROJECT NUMBER
17030

DRAWN BY
rMc

CHECKED BY
RT

DATE
11.28.2018

SHEET NO.
P1.2
SHEET OF SHEETS

Proprietary Property of Class Leasing
Proprietary Property of Class Leasing
Proprietary Property of Class Leasing

5/4/2018 8:39:20 AM C:\Users\Cesar\Documents\17030 - Aries, 12x40 Moment Frame PC - MainFile.rvt 04.11.18_Cesar.rvt

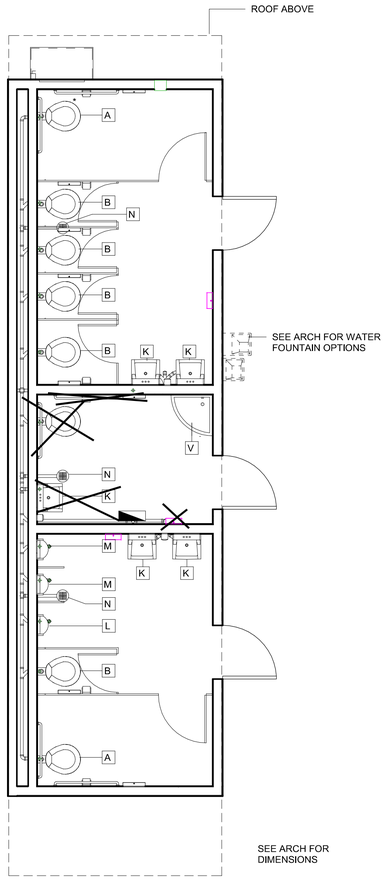

2 *1/4" = 1'-0"*
12x40 Plumbing Waste Plan Option 2 (A)

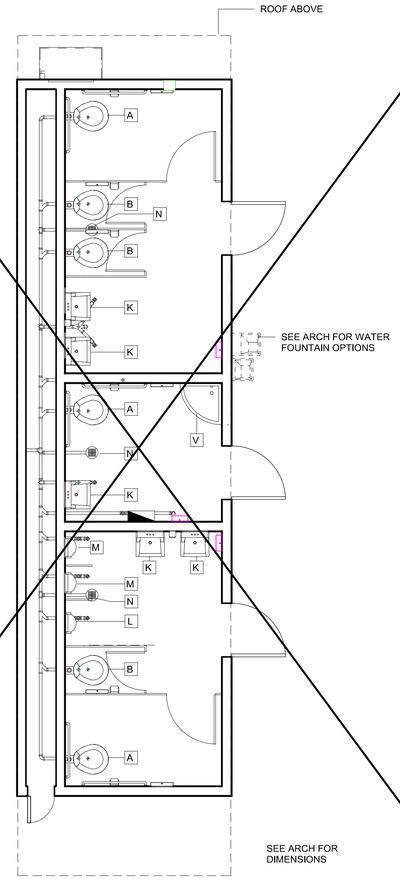

3 *1/4" = 1'-0"*
12x40 Plumbing Waste Plan Option 2 (B)

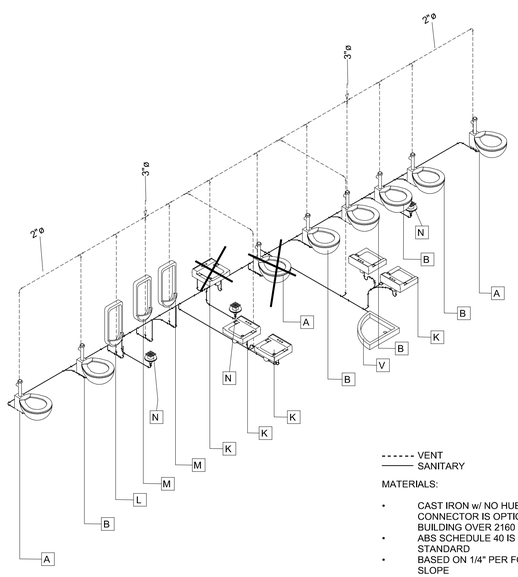

------ VENT
——— SANITARY

MATERIALS:

- CAST IRON w/ NO HUB CONNECTOR IS OPTION FOR BUILDING OVER 2160 SF.
- ABS SCHEDULE 40 IS STANDARD
- BASED ON 1/4" PER FOOT SLOPE

4 ***Waste Option 2 (A)***

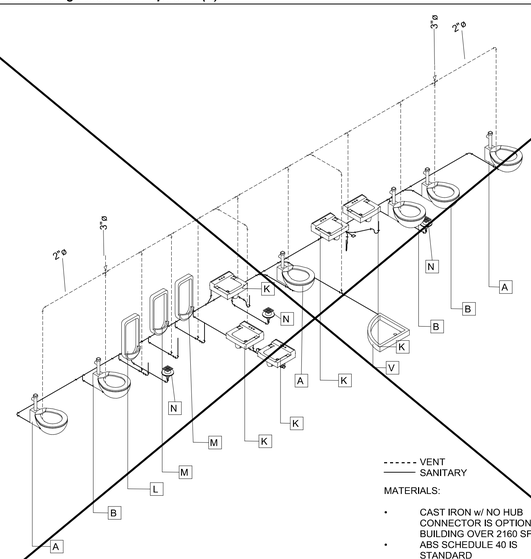

------ VENT
——— SANITARY

MATERIALS:

- CAST IRON w/ NO HUB CONNECTOR IS OPTION FOR BUILDING OVER 2160 SF.
- ABS SCHEDULE 40 IS STANDARD
- BASED ON 1/4" PER FOOT SLOPE

5 ***Waste Option 2 (B)***

FIXTURE SCHEDULE

	TAG	FIXTURE	FIXTURE DESCRIPTION AS SPECIFIED OR APPROVED EQUAL	PIPE SIZE COLD WATER	PIPE SIZE HOT WATER	PIPE SIZE WASTE	PIPE SIZE VENT
WATER CLOSETS ASME A112.19.2	A & B	[AGE 9 TO ADULT] WATER CLOSET WALL MTD/FLUSH "A" ACCESSIBLE & "B" NON-ACCESSIBLE	*PROFLO PF1731WH* Color/Finish White CSA Certified Yes Flow Rate 1.28 gpf Maximum Material Vitreous China Toilet/Urinal Installation Wall Mount Toilet Type One Piece WaterSense Labeled No	1"	N/A	3"	2"
	C	[AGE 9 - 12] WATER CLOSET FLOOR MTD/FLUSH ACCESSIBLE	*PROFLO PF1723* Color/Finish White CSA Certified CSA B45.1 Flow Rate 1.28 gpf Maximum Height 17 in Material Vitreous China Toilet Type One Piece	1"	N/A	3"	2"
	D & E	[AGE 9 - 12] WATER CLOSET FLOOR MTD/FLUSH ACCESSIBLE	*PROFLO PF1721* ADA Compliant Yes Color/Finish White CSA Certified CSA B45.1 08 Flow Rate 1.28 gpf Maximum Material Vitreous China Toilet Type Two Piece WaterSense Labeled No	1"	N/A	3"	2"
	F	[AGE 3 - 4] WATER CLOSET FLOOR MTD/FLUSH ACCESSIBLE & NON-ACCESSIBLE	*PROFLO 1700BBWH* ASME Specifications ASME A112.19.2 Color/Finish White Flow Rate 1.28 gpf Maximum Material Vitreous China Toilet Bowl Shape Round Toilet Type One Piece WaterSense Labeled No	1"	N/A	3"	2"
	G	[AGE 9 TO ADULT] WATER CLOSET TANK TYPE ACCESSIBLE	*PROFLO PF9403WH* ASME Specifications ASME A112.19.2M Collection 9400 Series Color/Finish White Flow Rate 1.28 gpf Maximum Handle Type Trip Lever Material Vitreous China Toilet Bowl Shape Elongated Toilet Type Two Piece WaterSense Labeled Yes	1/2"	N/A	2"	2"
	H	[AGE 5 - 12] WATER CLOSET TANK TYPE ACCESSIBLE	*PROFLO PF9401WH* Color/Finish White Flow Rate 1.28 gpf Maximum Green WaterSense Handle Type Trip Lever Material Vitreous China Toilet Bowl Shape Elongated Toilet Type Two Piece WaterSense Labeled Yes Width 18 5/8 in	1/2"	N/A	3"	2"
	I	[AGE 9 - 12] WATER CLOSET TANK TYPE NON-ACCESSIBLE	*PROFLO PF9401WH* Color/Finish White Flow Rate 1.28 gpf Maximum Green WaterSense Handle Type Trip Lever Material Vitreous China Toilet Bowl Shape Elongated Toilet Type Two Piece WaterSense Labeled Yes Width 18 5/8 in	1/2"	N/A	3"	2"
	J	[AGE 3 - 4] WATER CLOSET TANK TYPE ACCESSIBLE & NON-ACCESSIBLE	*PROFLO PF1704BB* Color/Finish White Flow Rate 1.28 gpf Maximum Material Vitreous China Toilet Type Two Piece WaterSense Labeled No	1/2"	N/A	3"	2"
	K	LAVATORY ACCESSIBLE	*AMERICAN STANDARD 0355.012 LUCERNE* Material Vitreous China Flow rate 0.5 gpm Maximum Single Handle Faucet American Standard 9141.011 To be used @ Kinder applications only	1/2"	N/A	2"	1 1/2"
	L	URINAL ACCESSIBLE	*PROFLO PF1805WH* Collection 1800 Series Color/Finish White Color/Finish Category Whites Flow Rate .125 gpf Maximum Material Vitreous China Toilet/Urinal Installation Wall Mount WaterSense Labeled No	3/4"	N/A	2"	1 1/2"
	M	URINAL NON-ACCESSIBLE	*PROFLO PF1805WH* Collection 1800 Series Color/Finish White Color/Finish Category Whites Flow Rate .125 gpf Maximum Material Vitreous China Toilet/Urinal Installation Wall Mount WaterSense Labeled No	3/4"	N/A	2"	1 1/2"
	N	FLOOR DRAIN	*JAY R SMITH #2005YA-02-P050-NB* Floor Drain for Primer 5" Material Nickel Bronze Straine w/ 1/4" MAX OPENINGS	-	N/A	2"	1 1/2"
	O	TRAP PRIMER	***PR-500*** w/ 8"x12" Lockable Box 1/2" Ball Shut-off Valve PPP DU-U FRESH Water Distribution System	1/2"	N/A	N/A	N/A
	Q	WATER HAMMER ARRESTOR	*PPP SC-1000*	1"	N/A	N/A	N/A
	R	GRAB BAR	*McKINNEY 9704-1-1/2 OC* Material Satin Finish; 36" long on back and 42" on side	-	N/A	N/A	N/A
	S	MIRROR	*SERIES 530 RETURNED* Mirrors Stainless Steel 18GA 18"x24" - "J" Sheet Metal Manufactered or Approved Equal	-	N/A	N/A	N/A
	T	TOILET PARTITION	*METAL POWDER COATED*	-	N/A	N/A	N/A
	U	SERVICE SINK	*KOHLER K-6714 "BANNON" 22"x18"* Finish Cast Iron, Acid Resist K-8905-RP Faucet K-6672 2" I.P.S. Trap	1/2"	1/2"	2"	1 1/2"
	V	MOP SINK	*KOHLER K-6710 "WHITBY" 28"x28"* Finish Cast Iron Faucet Chicago 956-R, 853 Wall hook, 2" K-9142 Strainer	1/2"	1/2"	2"	1 1/2"
	W	CLASSROOM SINK	*JUST CRA-1725-A-GR 17"x25"* w/ 4 1/2" BOWL Depth 4 1/2" BOWL Faucet #350 Chicago Bubbler JSB-10	1/2"	1/2"	2"	1 1/2"
	X	WATER HEATER OPTION	☐ A.O. SMITH #DEL-6 6 GALLON ☐ A.O. SMITH #DEL-10 10 GALLON SEE SHEET 7 / A3.1 , 9 / A3.1	3/4"	3/4"	N/A	N/A
	Y	INSTANT WATER HEATER OPTION	EEMAX #SP3012, 120V, 3.0KW, 25A	1/2"	1/2"	N/A	N/A

NOTE: SEE SHEET A3.1 FOR ACCESSIBILITY AND MOUNTING HEIGHT DETAILS
SEE 4M0.1 EQUIPMENT ANCHORAGE FOR NOTES

1 *1/4" = 1'-0"*
PLUMBING FIXTURE SYMBOL

IDENTIFICATION STAMP
DIV. OF THE STATE ARCHITECT
APP: 01-119031 INC:
REVIEWED FOR
SS ☑ FLS ☑ ACS ☑
DATE: 10/22/2020

PROFESSIONAL STAMP

REGISTERED PROFESSIONAL ENGINEER
RANDY D. ROSH
No. S3380
STRUCTURAL
STATE OF CALIFORNIA

11.28.2018

THE PLANS, IDEAS & DESIGNS SHOWN ON THESE DRAWINGS ARE THE PROPERTY OF R&S TAVARES ASSOCIATES, INC. DEVISED SOLELY FOR THIS CONTRACT. THESE PLANS SHALL NOT BE USED, IN WHOLE OR IN PART, FOR ANY PURPOSE FOR WHICH THEY WERE NOT INTENDED WITHOUT THE EXPRESS WRITTEN CONSENT OF R&S TAVARES ASSOCIATES, INC. ©

CLIENT

CLASS LEASING LLC
1221 Harley Knox Boulevard
Perris, CA 92571

ORIGINAL PC STATE AGENCY APPROVAL

FILE NUMBER: PC-128
IDENTIFICATION STAMP
DIVISION OF THE STATE ARCHITECT
APP. NO: 04 - 116501 INCR :
AC RM FLS RF SS KR
DATE 2/13/2019

PROJECT TITLE
12' x 40'

PROJECT SPECIFIC STATE AGENCY APPROVAL

Revision Schedule

#	Description	Date

SHEET TITLE
12x40 WASTE & ISO OPTION 2 (A) (B)

PROJECT NUMBER
17030

DRAWN BY
rMc

CHECKED BY
RT

DATE
11.28.2018

SHEET NO.
P2.2

SHEET OF SHEETS

Proprietary Property of Class Leasing
Proprietary Property of Class Leasing
Proprietary Property of Class Leasing

C:\Users\Cesar\Documents\17030 - Aries, 12x40 Moment Frame PC - MainFile.rvt 04.11.18_Cesar.rvt
5/4/2018 8:39:57 AM

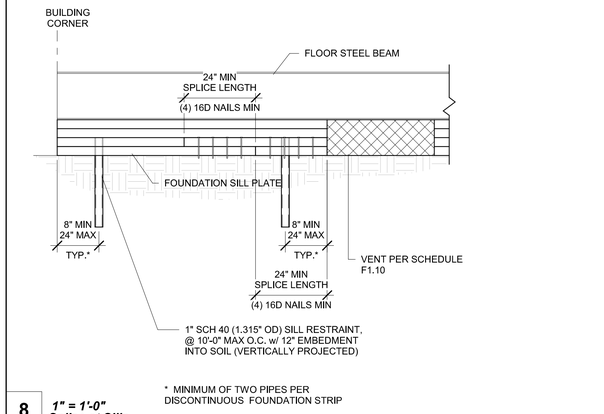

8 *1" = 1'-0"*
Splice at Sills

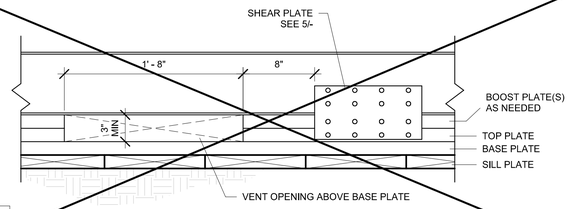

7 *1 1/2" = 1'-0"*
Venting Located Above Base Plate for 150 PSF LL

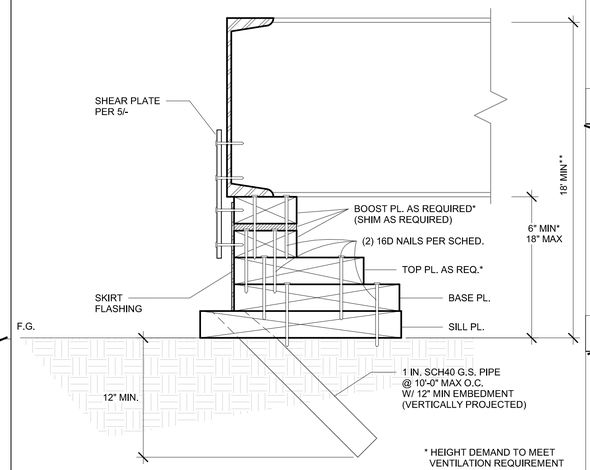

6 *3" = 1'-0"*
SILL PLATE PROFILE

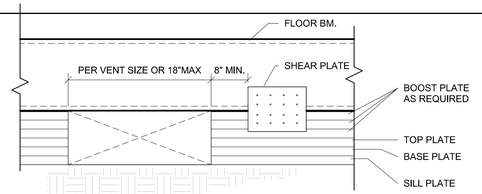

10 *1 1/2" = 1'-0"*
SIDEWALL ACCESS FOR (50+15PSF) ~~& (100PSF)~~

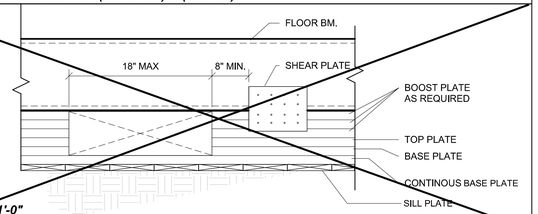

9 *1 1/2" = 1'-0"*
SIDEWALL ACCESS FOR (150PSF)

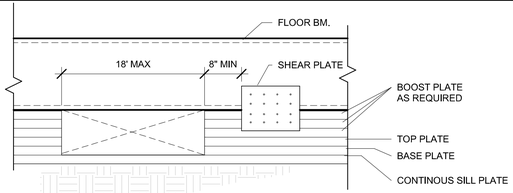

8 *1 1/2" = 1'-0"*
END WALL ACCESS FOR ALL LOADING(50+15PSF)(~~100PSF)(150PSF)~~

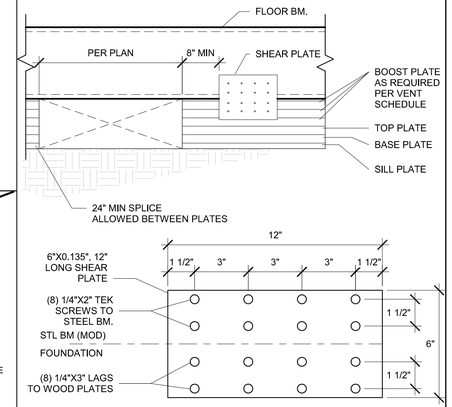

5 *1 1/2" = 1'-0"*
VENT OPENING AT SIDEWALL

18" CRAWL SPACE REQUIRED ON ALL UNDER FLOOR PLUMBING OPTION

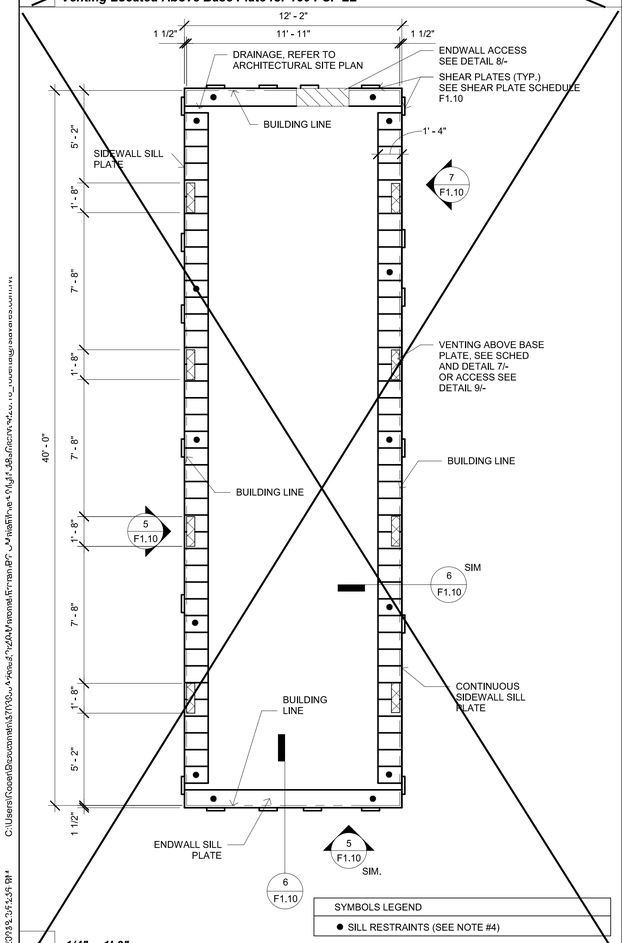

4 *1/4" = 1'-0"*
12x40 FOUNDATION PLAN 150 PSF

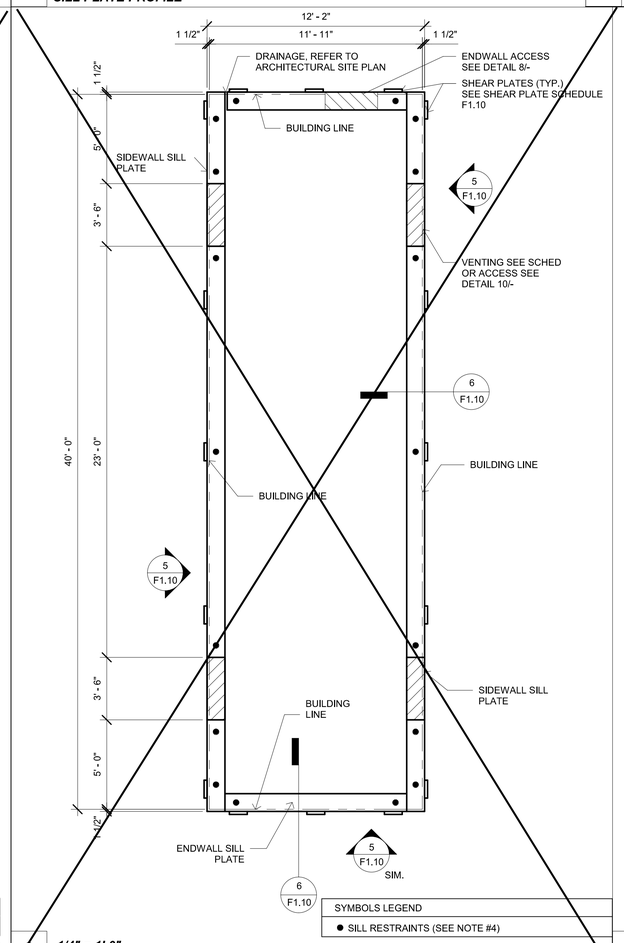

3 *1/4" = 1'-0"*
12x40 FOUNDATION PLAN 100 PSF

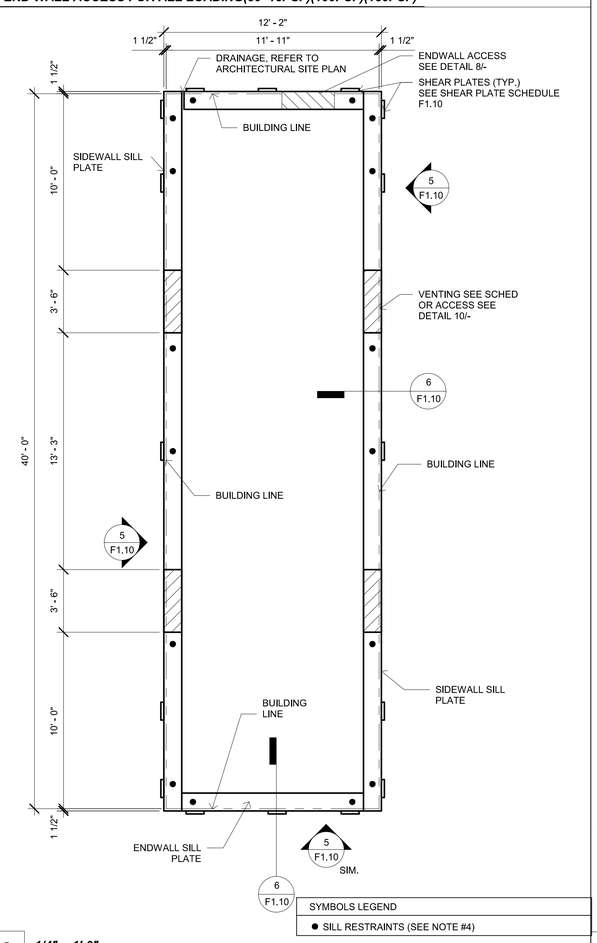

2 *1/4" = 1'-0"*
12x40 FOUNDATION PLAN 50+15

SHEAR PLATE SCHEDULE

	≤ 100 PSF	≤ 150 PSF	PARAPET
END WALL	3	4	4
SIDE WALL	5	7	7

SILL PLATE SCHEDULE

PLATE	END WALL	SIDE WALL
BOOSTER	2X4	2X4
TOP	2X6	2X6
BASE	2X8	2X8
SILL: 50+15 PSF	2X12	2X12
SILL: ≤100 PSF	2X14	2X14
SILL: ≤150 PSF	2X14	(CONT.) 2X12 16" LONG

SILL PL. FASTENING SCH.

END WALL	(2) 16D (COMMON/BOX NAIL) @ 6" O.C.
SIDE WALL	(2) 16D (COMMON/BOX NAIL @ 9" O.C.

VENTING SCHEDULE

50+15 PSF	TYP. VENT SIZE:	3IN x 3.5FT	= 1.25 SF
	VENT AREA REQ:	12FTX40FT/150	= 3.2 SF
	VENT AREA AVAIL:	(4)X0.875 SF	= 3.5 SF
100 PSF	TYP. VENT SIZE:	3IN x 3.5FT	= 1.25 SF
	VENT AREA REQ:	12FTX40FT/150	= 3.2 SF
	VENT AREA AVAIL:	(4)X3.5 SF	= 3.5 SF
150 PSF	TYP. VENT SIZE:	3IN x 20IN	= 0.42 SF
	VENT AREA REQ:	12FTX40FT/150	= 3.2 SF
	VENT AREA AVAIL:	(8)X0.42 SF	= 3.33 SF

NOTES:

1. WOOD FOUNDATION CONSTRUCTION IS ALLOWED FOR BUILDINGS WITH 2160 SF AND UNDER.

2. SILL PLATES SHALL BE OF FOUNDATION GRADE REDWOOD OR PRESERVATIVE PRESURE TREATED MATERIAL AND IS ALLOWED TO REST DIRECTLY ON SOIL OR PAVEMENT. MATERIALS ABOVE THE SILL PLATES ARE NOT CONTROLLED BY THIS REQUIREMENT.

3. VENTS THAT OCCUR INSIDE RAMP BOUNDARIES SHALL REQUIRE A VENT OF EQUAL SIZE AT RAMP SKIRTING.

4. TO PREVENT SLIDING, A 1 INCH G.S SCHEDULE 40 PIPE SHALL BE ATTACHED TO SILLPLATE AND ANCHORED INTO THE EARTH W/ 12" MIN EMBEDMENT (PROJECTED VERTICALLY) @ 10" O.C. AND SHALL BE LOCATED A MAXIMUM OF 2'-0" FROM CORNERS (MIN 2 PIPES PER SILL PLATE)

5. STACKED FOUNDATION MEMBERS SHALL BE FASTENED TO ONE ANOTHER W/ CORROSION RESISTANT NAILS.

6. WOOD FOUNDATION SHALL BE DESIGNED FOR AN ALLOWABLE BEARING PRESERVE OF 1,000 PSF IN ABSENSE OF A SOILS INVESTIGATION REPORT PROVIDED BY A LICENSED GEOTECHNICAL ENGINEER.

7. REFER TO ARCHITECT'S SITE PLAN FOR DRAINAGE.

8. THERE IS NO CONCRETE FLOOR FOR WOOD FOUNDATION OPTION, I.E., CONCRETE FLOOR LOAD IS INCLUDED IN THE CONCRETE FOUNDATION OPTION FOR FOUNDATION & ANCHORAGE DESIGN.

1 *1/4" = 1'-0"*
NOTES AND SCHEDULES FOR WOOD FOUNDATION

IDENTIFICATION STAMP
DIV. OF THE STATE ARCHITECT
APP: 01-119031 INC:
REVIEWED FOR
SS ☑ FLS ☑ ACS ☑
DATE: 10/22/2020

PROFESSIONAL STAMP

REGISTERED PROFESSIONAL ENGINEER RICHARD D. TAYLOR No. S3380 STRUCTURAL STATE OF CALIFORNIA
11.28.2018

THE PLANS, IDEAS & DESIGNS SHOWN ON THESE DRAWINGS ARE THE PROPERTY OF R&S TAVARES ASSOCIATES, INC. DEVISED SOLELY FOR THIS CONTRACT. THESE PLANS SHALL NOT BE USED, IN WHOLE OR IN PART, FOR ANY PURPOSE FOR WHICH THEY WERE NOT INTENDED WITHOUT THE EXPRESS WRITTEN CONSENT OF R&S TAVARES ASSOCIATES, INC. ©

CLIENT

CLASS LEASING LLC
1221 Harley Knox Boulevard
Perris, CA 92571

ORIGINAL PC STATE AGENCY APPROVAL

FILE NUMBER: PC-128
IDENTIFICATION STAMP
DIVISION OF THE STATE ARCHITECT
APP. NO: 04 - 116501 INCR :
AC RM FLS RF SS KR
DATE 2/13/2019

PROJECT TITLE
12' x 40'

PROJECT SPECIFIC STATE AGENCY APPROVAL

Revision Schedule

#	Description	Date

SHEET TITLE
WOOD FOUNDATION PLAN

PROJECT NUMBER
17030

DRAWN BY
rMc

CHECKED BY
RT

DATE
11.28.2018

SHEET NO.
F1.10

SHEET OF SHEETS

Proprietary Property of Class Leasing
Proprietary Property of Class Leasing
Proprietary Property of Class Leasing

STRUCTRUAL STEEL:

A. ALL WORK SHALL, UNLESS MODIFIED BY THE CONCTRACT DOCUMENTS, SHALL BE PERFORMED IN ACCORDANCE WITH CURRENT AISC SPECIFICATIONS AND STANDARDS.
B. STEEL SHAPES SHALL COMFORM TO THE FOLLOWING STANDARD:
  a. STRUCTURAL HSS COLUMNS: ASTM A500 GRADE B
  b. STRUCTURAL W-SHAPES: ASTM A992 GRADE 50
  c. TUBE STEEL: ASTM A500 GRADE B
  d. ALL OTHER: ASTM A36

C. FABRICATION, ERECTION, AND SHOP PAINTING SHALL BE IN ACCORDANCE WITH THE PROVISIONS OF THE AISC *CODE OF STANDARD PRACTICE FOR STEEL BUILDING AND BRIDGES*.
D. HOLES IN STRUCTURAL STEEL SHALL NO BE PERMITTED, UNLESS SPECIFIED IN THE STRUCTURAL DRAWINGS

CONCRETE

A. ALL CONCRETE WORK, UNLESS MODIFIED BY CONTRACT DOCUMENTS, SHALL BE PERFORMED IN ACCORDANCE WITH CHAPTER 19A, CBC 2013 AND ACI 318-11.

B. TESTS AND INSPECTION SHALL BE PERFORMED BY A TESTING LABORATRY CONTRACTED BY THE DISTRICT.

C. MIX DESIGN SHALL BE SUBMITTED FOR QUALIFICATION AND PROVIDE A 28-DAY COMPRESSIVE STRENGTH F'C OF 3500 PSI, COMPOSED OF NORMAL WEIGHT TYPE I PORTALAND CEMENT IN CONFORMANCE WITH ASTM C150.

D. FORMWORK SHALL RESULT IN FINAL STRUCTURE THAT CONFORMS TO SHAPES, LINES, AND DIMENSIONS AS REQUIRED BY THE CONTRACT DOCUMENTS.

E. LOCATIONS OF VENTS AND OPENINGS FOR MECHANICAL AND ELECTRICAL USE SHALL BE VERIFIED BY ARCHITECT.

F. EMBEDMENT OF MATERIALS NOT HARMFULL TO CONCRETE AND WITHIN LIMITATIONS OF SECTION 6.3, ACI-318-11 SHALL BE PERMITTED. REFER TO OTHER DISCIPLINES FOR LOCATION OF CONDUIT, PIPES, FITTINGS, SLEEVES, ETC.

G. CONTINUOUS BATCH PLANT INSPECTION WAIVED PER CBC 1705A3.3. WHEN CONTINUOUS BATCH PLANT INSPECTION IS WAIVED, THE FOLLOWING PERIODIC INSPECTION SHALL BE REQUIRED:

1. QUALIFIED TECHNICIAN OF THE TESTING LABORATORY SHALL CHECK THE FIRST BATCH AT THE START OF THE DAY.
2. LICENSED WEIGHMASTER TO POSITIVELY IDENTIFY MATERIALS AS TO QUANTIFY AND CERTIFY TO EACH LOAD BY A BATCH TICKET.
3. BATCH TICKETS, INCLUDING MATERIAL QUANTITIES AND WEIGHTS SHALL ACCOMPANY THE LOAD, SHALL BE TRANSMITTED TO THE INSPECTOR OF RECORD BY A TRUCK DRIVER WITH THE LOAD IDENTIFIED THEREON. THE LOAD SHALL NO BE PLACED WITHOUT A BATCH TICKETS IDENTIFYING THE MIX. THE INSPECTOR WILL KEEP A DAILY RECORD OF PLACEMENTS, IDENTIFYING EACH TRUCK, ITS LOAD, AND TIME OF RECEIPT, AND APPROXIMATE LOCATION OF DEPOSIT IN THE STRUCTURE AND WILL TRANSMIT A COPY OF THE DAILY RECORD TO THE ENFORCEMENT AGENCY.

H. ANCHOR BOLTS, AND REINFORCING STEEL SHALL BE SECURELY TIED BEFORE CONCRETE IS POURED.

STEEL REINFORCEMENT

A. DEFORMED BARS SHALL CONFORM TO ASTM A615.
B. fy= 40,000 PSI, FOR ALL BARS EXEPT FOR #3 BARS, fy= 60,000 PSI.
C. PROVIDE A MINIMUM CONCRETE COVER FOR REINFORCEMENT EMBEDDED IN:
  a. CONCRETE CAST AGAINST AND PERMANENTLY EXPOSED TO EARTH = 3"
  b. CONCRETE EXPOSED TO EARTH OR WEATHER FOR #5 BARS OR SMALLER = 1.5"
D. SPLICE LENGTHS SHALL BE A MINIMUM OF 48" FOR #5 BARS, AND 30" FOR #4 BARS UNLESS OTHERWISE SPECIFIED IN DRAWINGS.

BOLTS

A. ALL BOLTS AND ANCHOR BOLTS SHALL COMFORM ATO ASTM A-307
B. BOLTS EXPOSED TO THE ELEMENTS SHALL BE GALVANIZED BY THE HOT-DIP OR MECHANICAL PROCESS

WELDING

A. ALL WELDING SAHLL BE IN COMFORMANCE TO:
  a. AWS D1.1, EXCEPT AS MODIFIED IN SECTION J2, AISC-360 FOR STEEL
  b. AWS D1.3 FOR LIGHT GUAGE STEEL
  c. AWS D1.4 FOR REINFORCING STEEL

B. ELECTRODE CLASSIFICATION:
  a. E70XX FOR STEEL AND CONCRETE STEEL REINFORCEMENT
  b. E60XX FOR LIGHT GUAGE STEEL

C. WELDS SHALL BE CAPABLE OF PRODUCING THE FOLLOWING V-NOTCH TOUGHNESS AS DETERMINED BY APPROPRIATE AWS A5 CLASSIFICATION TEST METHOD OR MANUFACTURER CERTIFICATION:
  a. LATERAL FORCE RESISTING SYSTEM (LFRS) = 20 FT-LB AT 0 DEGREE F
  b. COMPLETE JOINT PENETRATION GROOVE WELD = 20 FT-LB AT 40 DEGREE F

D. SHOP AND FIELD WELDING SHALL BE PERFORMED BY AWS CERTIFIED WELDERS.

E. INSPECTION:
  a. PERIODIC INSPECTION OF FILLET WELDS LESS THAN OR EQUAL TO 5/16”, FLOOR AND ROOF DECK WELDS.
  b. CONTINUOUS INSPECTION FOR OTHER WELDS.

F. NONDESTRUCTIVE TESTING (NDT):
  a. ULTRASONIC TESTING SHALL BE PERFORMED ON 100 PERCENT OF CJP GROOVE WELDS IN MATERIALS 5/16” OR THICK OR GREATER. ULTRASONIC TESTING NOT REQUIRED FOR MATERIALS LESS THAN 5/16” THICK. TESTING FREQUENCY MAY BE REDUCED TO 25%, PROVIDED PROVISIONS SET FORTH IN SECTION N5.5e, AISC-360 IS MET.
  b. MAGNETIC PARTICLE TESTING SHALL BE PERFORMED ON 25 PERCENT OF ALL BEAM-TO-COLUMN CJP GROOVE WELDS. TESTING FREQUENCY MAY BE REDUCED TO 10%, PROVIDED PROVISIONS SET FORTH IN J6.2g, AISC-341 IS MET.

.
FOUNDATIONS

GEOTECHNICAL INVESTIGATION SHALL BE CONDUCTED IN ACCORDANCE WITH SECTION 1803A.1 THROUGH 1803A.8 BY A GEOTECHNICAL ENGINEER CONTRACTED BY THE DISTRICT. ALLOWABLE FOUNDATION AND LATERAL SOIL PRESSURE VALUES MAY BE DETERMINED FROM TALBLE 1806A.2, WHERE GEOTECHNINCAL REPORTS IS NOT REQUIRED PER SECTION 1803A.2. A MAXIMUM ALLOWABLE SOIL PRESSURE OF 1000 PSF AND 1500 PSF SHALLBE PERMITTED FOR TEMPORARY WOOD AND PERMANENT CONCRETE FOUNDATIONS RESPECTIVELY IN ACCORDANCE WITH SECTION 4.6, IR 16-1.13

A PREVIIOUS REPORT FOR A SPECIFIC SITE MAY BE RESUBMITTED. THE ALLOWABLE FOUNDATIONA AND LATERAL SOIL PRESSURE VALUES ARE ALLOWED A 33% INCREASE FOR SHORT TERM WIND AND SEIMIC LOADS.

THE DISTRCT SHALL BE RESPONSIBLE FOR EXCAVATION, BACKFILL, SETTING ELEVATIONS, CRANING AND RIGGING. PROVIDE SHIMS TO LEVEL BUILDING WITHIN 1/2" TOLERANCE.

COLD-FORMED STEEL:

A. ALL WORK SHALL, UNLESS MODIFIED BY THE CONCTRACT DOCUMENTS, SHALL BE PERFORMED IN ACCORDANCE WITH CURRENT AISI SPECIFICATIONS AND STANDARDS.

B. MATERIAL SPECIFICATION:
  a. ASTM A-1011/A, GRADE 33 FOR MATERIALS THICKNESS 0.120 OR LESS UNLESS OTHERWISE NOTED
  b ASTM A-1003, GRADE 33 TYPE H FOR LIGHT GUAGE STUDS AND TRACKS
  c. SHAPES SHALL BE DIMENSIONED TO SSMA SPECIFICATIONS.

C. SCREWS EXPOSED TO THE ELEMENTS SHALL BE GALVANIZED

STEEL DECK

MINIMUM THICKNESS PERMITTED FOR FLOOR STEEL DECKS IS 20GA. PER DSA IR 16-1.13, 1.2.1, MINIMUM THICKNESS OF NON-STRUCTURAL STEEL ROOF DECKING IS 26GA. STANDING SEAM ROOF PANELS ARE GRADE 40 SHEET STEEL WITH AN ALUMINUM ZINC COATING CONFORMING TO ASTM A792 AND AZ55.

CHANGES

CHANGES AFFECTING STRUCTURAL PORTION OF THE APPROVED PC SHALL NEED DSA APPROVAL AND SHALL BE CLASSIFIED AS CCD CATEFORY A.

WOOD

ALL FRAMING LUMBER SHALL BE GRADE MARKED BY AN APPORVED GRADING AGENCY

SHEATHING:

EACH SHEETS SHALL BE GRADE MARKED BY THE AMERICAN PLYWOOD ASSOCIATION IN ACCORDANCE WITH THE PROCEDURES AND QUALIFICATIONS SET FORTH BY PS 1-07.

1. SUB FLOOR: 1 1/8" T&G UNBLOCKED PLYWOOD, SHALL PROVIDE A SMOOTH AND UNIFORM SURFACE CAPABLE OF ACCEPTING CARPET FINISH
2. PLYWOOD ROOF DECK OPTION: APA RATED 3/4" T&G OSB OR EQUIVALENT RATED SHEATHING
3. EXTERIOR WALL SIDING:
  I. STANDARD: 5/8" DURATEMP OR 5/8" SMART PANEL
  II. OPTION: 5/8" MDO
  III. OPTION: 1/2" OSB OR CDX PLYWOOD FOR PLASTER/STUCCO FINISH

4. EXTERIOR WALL SIDING ATTACHMENT:

FASTENERS USED FOR THE ATTACHMENT OF EXTERIOR WALL COVERINGS SHALL BE HOT-DIPPED GALVANIZED, MECHANICALLY DEPOSITED ZINC-COATED, STAINLESS, SILICON BRONZE OR COPPER PER CBC SECTION 2304.9.1.1

FASTEN TO WOOD FRAMING WITH 8D BOX NAILS @ 6" E.N., 12" F.N. & SEE SHEARWALL SCHEDULE FOR S.W. & SHEATHING & FASTENING @ S1.0.1 & S1.1.1
FASTEN TO LIGHT GAGE METAL FRAMING WITH #8 WAFER HEAD STSMS @ 6" E.N., 12" F.N & & SEE SHEARWALL SCHEDULE FOR S.W. & SHEATHING & FASTENING @ S1.0.1 & S1.1.1
FASTEN TO STRUCTURAL STEEL WITH #12 STSMS OR 0.145 DIA SHOT PINS @ 12" O.C. *
* SHOT PIN NOT ALLOWED @ SHEAR WALL (UNO)

TREATED WOOD:

ALL WOOD LOCATED WITHIN 18" OF EXPOSED EARTH SHALL BE "PRESERVATIVE TREATED" OR SHALL BE "NATURALLY DURABLE" MATERIAL IN ACCORDANCE WITH CBC SECTION 2304.11.2.2.
1. ALL ROUGH LUMBER SHALL BE DF #2 OR BETTER.
2. ALL POWER DRIVEN FASTENERS SHALL BE HILTI FASTENERS ICC# ESR-1663, AND RAMSET POWER DRIVEN FASTENERS (ICC # ESR-1799), OR SIMPSON POWER DRIVEN FASTENERS ICC #ESR-2138, OR OTHER EQUIVALENT PRODUCTS WITH ICC REPORTS AND APPROVED BY DSA.
3. FASTENERS, INCLUDING NUTS AND WASHERS, IN CONTACT WITH PRESERVATIVE-TREATED WOOD SHALL BE OF HOT-DIPPED ZINC-COATED GALVANIZED STEEL, STAINLESS STEEL, SILICON BRONZE OR COPPER PER CBC 2304.9.5.1

ROOF DIAPHRAGM:

3/4" T&G RATED SHEATHING, EXPOSURE 1, 48/24 SPAN RATING
FASTEN AT METAL SUPPORTS W/ #10 x 1 1/4" SELF-TAPPING PHILLIPS FLAT-HEAD ZINC COATED TEKS SCREWS @ 4" O.C. BN, 6" O.C. EN, AND 12" O.C. FN. PROVIDE A MINIMUM OF 3/8" EDGE DISTANCE FOR FASTENERS TO PLYWOOD EDGE PER CBC SECTION 2306.2.

FLOOR DIAPHRAGM:

1 1/8" PLYWOOD - STURD-I-FLOOR T&G RATED SHEATHING, EXTERIOR, 48" oc SPAN RATING
FASTEN AT METAL SUPPORTS W/ #10 - 24 x 1 3/4" SELF-TAPPING PHILLIPS FLAT-HEAD ZINC COATED TEKS @ 2.5" OR 6" O.C. BN, 4"/6" O.C. EN, 12" FN. PROVIDE A MINIMUM OF 3/8" EDGE DISTANCE FOR FASTENERS TO PLYWOOD EDGE PER CBC SECTION 2306.2

CONCRETE FLOOR DATA: LIGHTWEIGHT CONCRETE FLOOR
STRENGHT: 3500 PSI OR 4000 PSI
TYPE: I OR II
DESINTY: 110 PCF - MAX

DIMENSION LUMBER ATTACHMENT TO STEEL FRAMING:

2 x STUDS AT CORNER STEEL COLUMNS (NAILING STUD)
USE: #10 - 24 x 2 1/2" LG. SELF-DRILLING SELF-TAPPING PHILLIPS FLAT-HEAD WITH WASHER ZINC COATED TEK SCREWS AT 24" OC.

NAILING NOTES:

1. ALL NAILS SHALL BE COMMON UNLESS OTHERWISE NOTED
2. MACHINE APPLIED 16d FASTENERS SHALL HAVE AN EMBDMENT OF NOT LESS THAN 1 1/2" INTO THE SECOND MEMBER, AND SHALL NOT BE LESS THAN 3" IN OVERALL LENGHT.
3. NAILS SHALL BE ACCEPTABLE FOR HAND NAILING, PROVIDED THE REQUIREMENT EMBEDMENT IS MAINTAINED.

CONNECTIONS AND FASTENERS:

ALL CONNECTIONS AND FASTENERS IN DRAWINGS CAN BE SUBSTITUTED BY AN EQUIVALENT PRODUCT PROVIDING ICC REPORTS ARE SUBMITTED TO AND APPROVED BY DSA.

CONNECTIONS LAG SCREWS:

LAG SCREWS SHALL BE INSTALLED WITH WHASHER AND TURNED BY WRENCH, OVER-TORQUING SHALL BE AVOIDED. A PRE-DRILLED CLEARANCE AND LEAD HOLE SHALL BE REQUIRED AS DESCRIBED BELOW:

a) THE CLEARANCE HOLE FOR THE UNTHREADED PORTION OR THE SHANK SHALL HAVE SAME DEPTH AND DIAMETER.

b) THE LEAD HOLE FOR THE THREADED PORTION OF THE SHANK SHALL HAVE SAME DEPTH AND
65% TO 85% OF SHANK DIAMETER FOR LUMBER WITH SPECIFC GRAVITY OF, $G > 0.6$
60% TO 75% OF SHANK DIAMETER FOR LUMBER WITH SPECIFC GRAVITY OF, $0.5 < G \leq 0.6$ (DOUGLAS FIR)
40% TO 70% OF SHANK DIAMETER FOR LUMBER WITH SPECIFC GRAVITY OF, $G \leq 0.5$ (HEM FIR)

LEAD OR CLEARANCE HOLES SHALL NOT BE REQUIRED FOR 3/8” DIAMETER OR SMALLER LAG SCREWS.

BALLISTIC PINS OPTIONS

1. HILTI X-CR PIN WITH 0.145 SHANK DIAMTER, ICC ESR-1663
2. RAM SET 1500 PIN WITH 0.145 SHANK DIAMTER, ICC ESR-1799
3. SIMPSON STRONG TIE PDP PIN WITH 0.145 SHANK DIAMTER, ICC ESR-2138

NAILING SCHEDULE: (ALL NAILS SHALL BE COMMON, GALVANIZED WHERE EXPOSED) PER C.B.C. TABLE 2304.9.1

CONNECTION	FASTENING	LOCATION
1. JOIST TO SILL OR GIRDER	3-8d	TOENAIL
2. BRIDGING TO JOIST	2-8d	TOENAIL EA. END
3. 1X6 OR LESS SUBFLOOR TO EA. JOIST	2-8d	FACE NAIL
4. WIDER THAN 1X6 SUBFLOOR TO EA. JOIST	3-8d	FACE NAIL
5. 2" SUBFLOOR TO JOIST	2-16d	BLIND & FACE NAIL
6. SOLE PLT. TO JOIST OR BLK'G. TO EA. JOIST	16d@16"	TYP. FACE NAIL
SOLE PLT. TO JOIST OR BLK'G. @ BRACED WALL PANEL	3-16d@16"	TYP. FACE NAIL
7. TOP PLT. TO STUD	2-16d	END NAIL
8. STUD TO SOLE PLT.	2-16d	END NAIL
OR	4-8d	TOENAIL
9. DOUBLE STUDS	16d@24"	END NAIL
10. DOUBLE TOP PLT.	16d@16"	TYP. FACE NAIL
DOUBLE TOP PLT.	8-16d MIN. U.N.O.	LAP SPLICE
11. BLKG. BTW. JOIST OR RAFTERS TO TOP PLT.	3-8d	TOENAIL
12. RIM JOIST TO TOP PLT.	8d@6"	TOENAIL
13. TOP PLT., LAPS & INTERSECTIONS	2-16d	FACE NAIL
14. CONT. HDR. 2 PIECES	16d@16"	ALONG EDGE
15. CLG. JOIST TO PLT.	3-8d	TOENAIL
16. CONT. HDR. TO STUD	4-8d	TOENAIL
17. CLG. JOIST LAP OVER PARTITONS	3-16d	FACE NAIL
18. CLG. JOIST PARALLEL TO RAFTERS	3-16d	FACE NAIL
19. RAFTER TO PLT.	3-8d	TOENAIL
20. 1" DIA. BRACE TO EA. STUD & PLT.	2-8d	FACE NAIL
21. 1X8 SHT'G. TO EA. BRG.	3-8d	FACE NAIL
22. WIDER THAN 1X8 SHT'G. TO BRG.	3-8d	FACE NAIL
23. BUILT-UP CORNER STUDS	16d@24"	FACE NAIL
24. BUILT-UP GIRDERS & BEAMS	20d@32"	FACE NAIL @ TOP & BTM. STAGR. ON OPP. SIDES
	2-20d	FACE NAIL @ ENDS & @ EA. SPLICE
25. 2" PLANKS	2-16d	@ EA. BRG.
26. COLLAR TIE TO RAFTER	3-10d	FACE NAIL
27. JACK RAFTER TO HIP	3-10d	TOENAIL
28. ROOF RAFTER TO 2X RIDGE	2-16d	TOENAIL
	2-16d	FACE NAIL
29. JOIST TO BAND JOIST	3-16d	FACE NAIL
30. 4X BLOCKING TO STUDS	1-A34	FACE NAIL

IDENTIFICATION STAMP
DIV. OF THE STATE ARCHITECT
APP: 01-119031 INC:
REVIEWED FOR
SS ☑ FLS ☑ ACS ☑
DATE: 10/22/2020

PROFESSIONAL STAMP

REGISTERED PROFESSIONAL ENGINEER
MANNY D. FRESCH
No. S3380
STRUCTURAL
STATE OF CALIFORNIA
11.28.2018

THE PLANS, IDEAS & DESIGNS SHOWN ON THESE DRAWINGS ARE THE PROPERTY OF R&S TAVARES ASSOCIATES, INC. DEVISED SOLELY FOR THIS CONTRACT. THESE PLANS SHALL NOT BE USED, IN WHOLE OR IN PART, FOR ANY PURPOSE FOR WHICH THEY WERE NOT INTENDED WITHOUT THE EXPRESS WRITTEN CONSENT OF R&S TAVARES ASSOCIATES, INC. ©

CLIENT
CLASS LEASING LLC
1221 Harley Knox Boulevard
Perris, CA 92571

ORIGINAL PC STATE AGENCY APPROVAL
FILE NUMBER: PC-128
IDENTIFICATION STAMP
DIVISION OF THE STATE ARCHITECT
APP. NO: 04 - 116501 INCR :
AC RM FLS RF SS KR
DATE 2/13/2019

PROJECT TITLE
12' x 40'

PROJECT SPECIFIC STATE AGENCY APPROVAL

Revision Schedule

#	Description	Date

SHEET TITLE
STRUCTURAL GEN NOTES

PROJECT NUMBER
17030

DRAWN BY
rMc

CHECKED BY
RT

DATE
11.28.2018

SHEET NO.
S0.1

SHEET OF SHEETS

Proprietary Property of Class Leasing
Proprietary Property of Class Leasing
Proprietary Property of Class Leasing

12" = 1'-0"
STRUCTURAL NOTES

C:\Users\Cesar\Documents\17030 - Aries, 12x40 Moment Frame PC - MainFile.rvt 04.11.18_Cesar.rvt
5/7/2018 7:36:40 PM

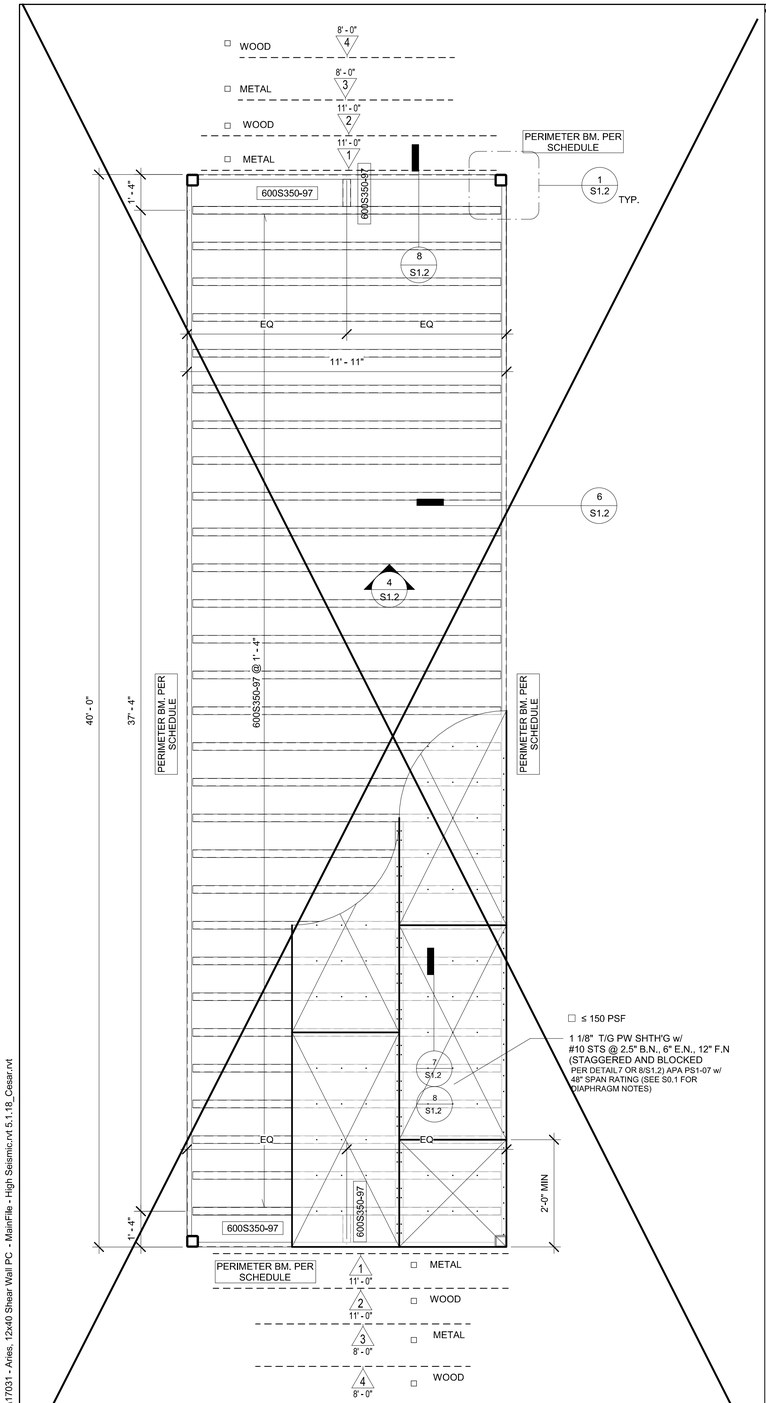

3 *3/8" = 1'-0"*
WD Shth'g Flr Framing Plan (150 PSF)

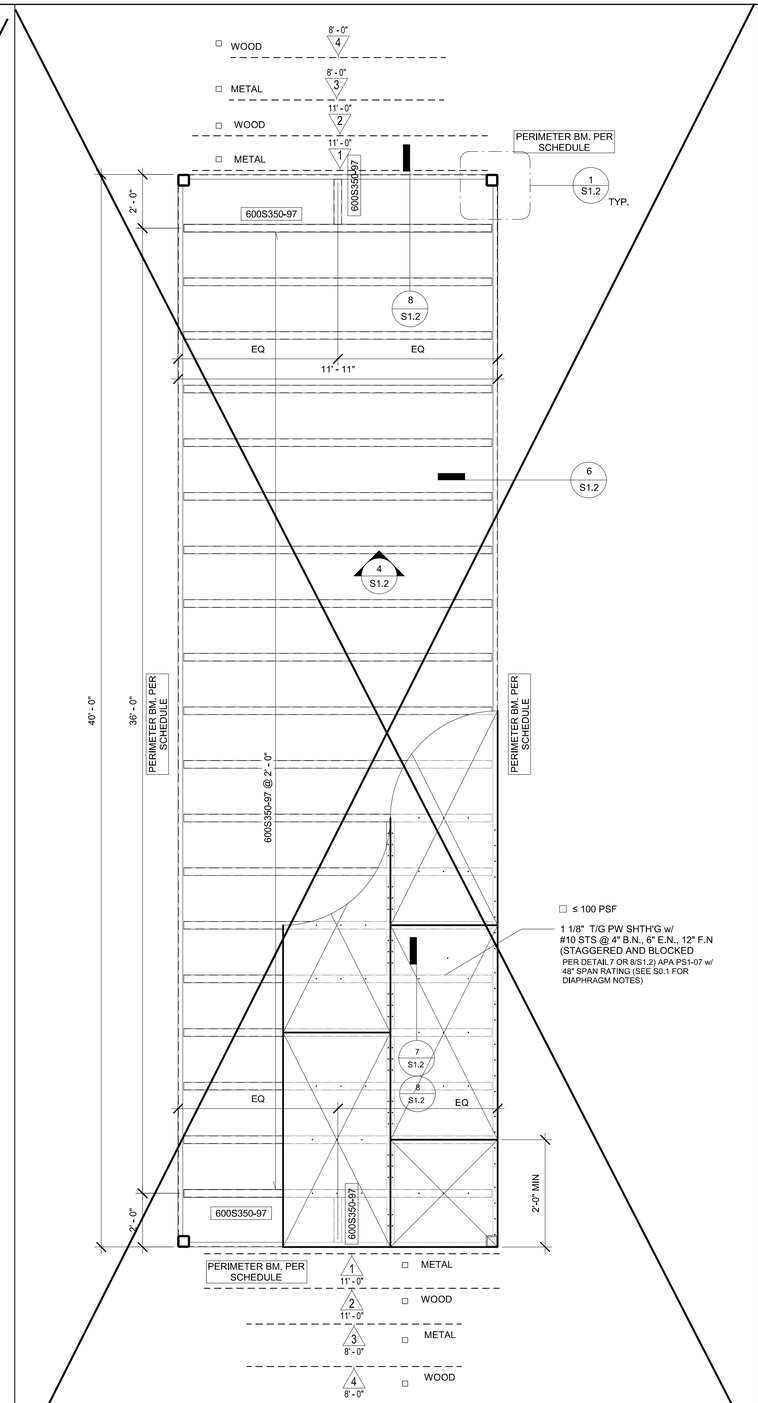

2 *3/8" = 1'-0"*
WD Shth'g Flr Framing Plan (100 PSF)

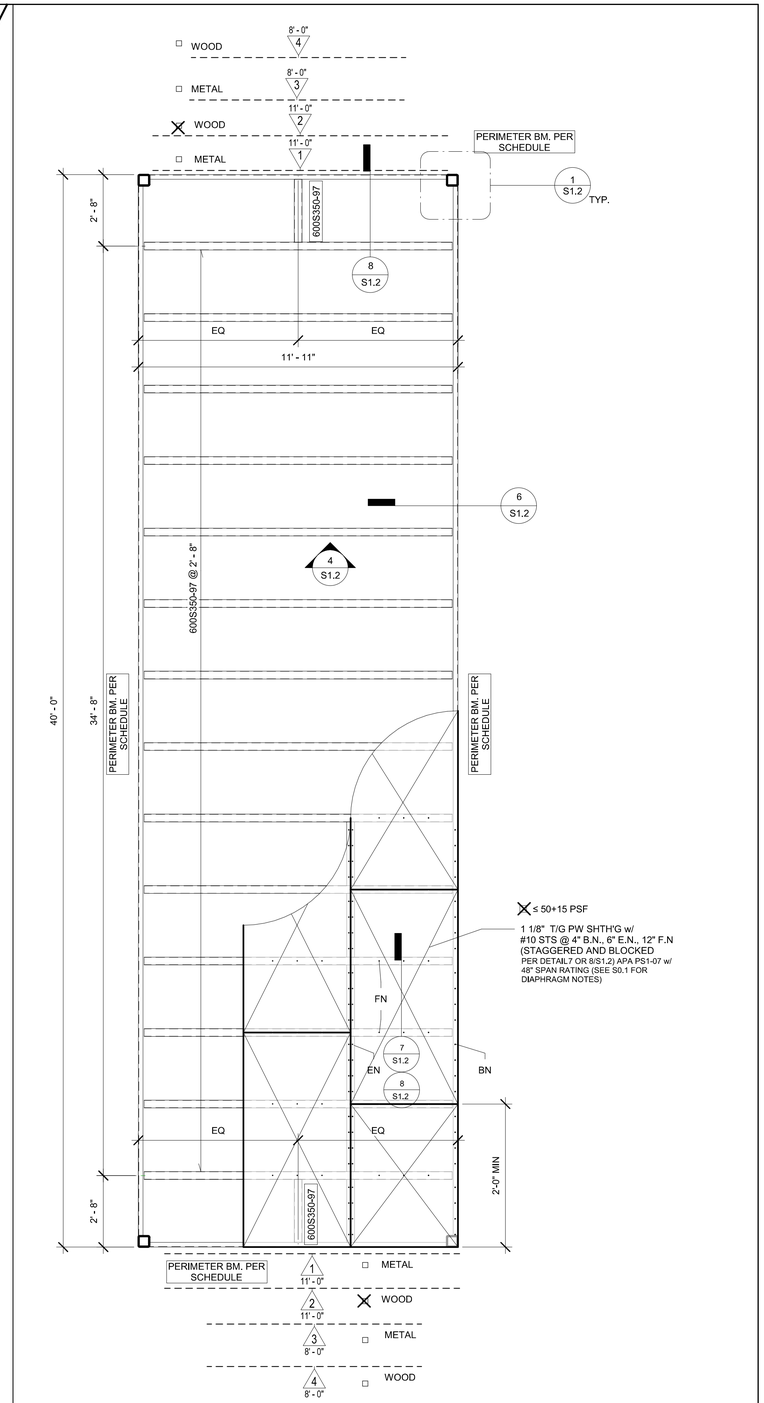

1 *3/8" = 1'-0"*
WD Shth'g Flr Framing Plan (50+15 PSF)

Column Schedule

HT	No Plaster Walls	Plaster Walls	w/ Parapet, 18" max
☒ 9'	HSS 5x5x1/4	HSS 5x5x1/4	HSS 6x6x1/4
☐ 10'	HSS 6x6X1/4	HSS 6x6x1/4	HSS 6x6x1/4

NOTE: ALL PANELS EDGES SHALL BE ATTACHED TO FRAMING MEMBERS OR BLOCKING. WHERE USED AS BLCOKING, FLAT STRAPPING SHALL BE A MINIMUM THICKNESS OF 33MILS WITH A MINIMUM WIDTH OF 1.5 INCHES AND SHALL BE EITHER INSTALLED ON TOP OF OR BELOW SHEATHING. FOR OTHER THAN STEEL SHEATHING, THE SCREWS SHALL BE INSTALLED THROUGH THE SHEATHING TO THE BLOCKING.

Perimeter Floor Beam Schedule

HT	Plaster Walls	Plaster Walls	w/ Parapet, 18" max
☒ 9'	C10x15.3	C10x15.3	C10x15.3
☐ 10'	C10x15.3	C10x15.3	C10x20

NOTE: SPLICE AT FLOOR BEAM PERMITTED PER 3/S1.2

SHEARWALL SCHEDULE

1. 7/16" RATED SHEATING- STEEL STUD @ 16" O.C. FASTENING SHALL BE #8 STS @ 6" E.N 12" F.N
2. 5/32" RATED SHEATING- WOOD STUD@ 16" O.C. FASTENING SHALL BE #8d NAILS @ 4" E.N 12" F.N (HOT-DIPPED GALVANIZED NAIL)
3. 7/16" RATED SHEATING- STEEL STUD@ 16" O.C. FASTENING SHALL BE #8 STS @ 4" E.N 12" F.N
4. 5/32" RATED SHEATING- WOOD STUD@ 16" O.C. FASTENING SHALL BE #8d NAILS @ 3" E.N 12" F.N (HOT-DIPPED GALVANIZED NAIL)

IDENTIFICATION STAMP
DIV. OF THE STATE ARCHITECT
APP: 01-119031 INC:
REVIEWED FOR
SS ☑ FLS ☑ ACS ☑
DATE: 10/22/2020

PROFESSIONAL STAMP

REGISTERED PROFESSIONAL ENGINEER
D. RAY PRATT
No. S3380
STRUCTURAL
STATE OF CALIFORNIA

11.28.2018

THE PLANS, IDEAS & DESIGNS SHOWN ON THESE DRAWINGS ARE THE PROPERTY OF R&S TAVARES ASSOCIATES, INC. DEVISED SOLELY FOR THIS CONTRACT. THESE PLANS SHALL NOT BE USED, IN WHOLE OR IN PART, FOR ANY PURPOSE FOR WHICH THEY WERE NOT INTENDED WITHOUT THE EXPRESS WRITTEN CONSENT OF R&S TAVARES ASSOCIATES, INC. ©

CLIENT

CLASS LEASING LLC
1221 Harley Knox Boulevard
Perris, CA 92571

ORIGINAL PC STATE AGENCY APPROVAL

FILE NUMBER: PC-128
IDENTIFICATION STAMP
DIVISION OF THE STATE ARCHITECT
APP. NO: 04 - 116501 INCR :
AC RM FLS RF SS KR
DATE 2/13/2019

PROJECT TITLE
12' x 40'

PROJECT SPECIFIC STATE AGENCY APPROVAL

Revision Schedule

#	Description	Date

SHEET TITLE
WOOD SHEATHING FLOOR FRAMING PLAN

PROJECT NUMBER
17031

DRAWN BY
rMc

CHECKED BY
RT

DATE
11.28.2018

SHEET NO.
S1.0.1
SHEET OF SHEETS

Proprietary Property of Class Leasing
Proprietary Property of Class Leasing
Proprietary Property of Class Leasing

C:\Users\Cesar\Documents\17031 - Aries, 12x40 Shear Wall PC - MainFile - High Seismic.rvt 5.1.18_Cesar.rvt
5/21/2018 1:50:22 PM

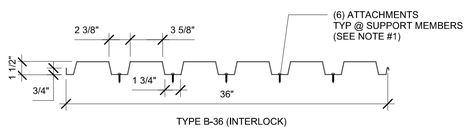

TYPE B-36 (INTERLOCK)

DECK SECTION PROPERTIES
TYPE B

THICKNESS	= 0.036"
POSITIVE	= 0.235 IN³
NEGITIVE	= 0.246 IN³
I	= 0.22 IN⁴

NOTES:

1. TYPICAL ATTACHMENT TO BE #10-16 TEKS/3 OR 1/2" DIAMETER SPOT (PUDDLE) WELDS.

2. PROVIDE #10-16 TEKS/3 @ 12" OC OR 1/2" DIAMETER SPOT (PUDDLE) WELDS AT 12" O.C. AT SUPPORTS PARALLEL WITH FLUTES & @ AT SEAMS

20 *1 1/2" = 1'-0"*
MTL Deck Section Properites4

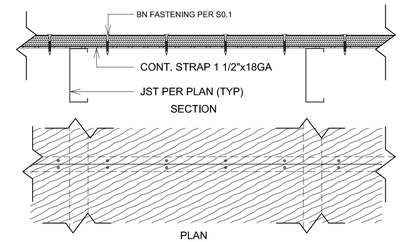

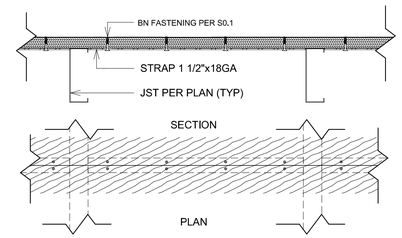

FLR SHTH'G:
1 1/8" THK @ FLOOR
3/4" THK @ ROOF

Strap blk'g may be applied as roof blg'k w/ #10X1" fstn'd from above shth'g

7 *3" = 1'-0"*
STRAP BLOCKING DETAIL (WOOD FLR & ROOF)

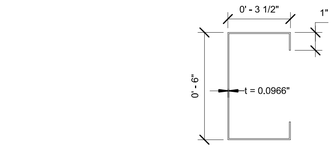

CHANNEL JOIST SECTION PROPERTIES
A-1011, GRADE 33

t	= 0.0966"
S_x	= 2.7439 IN³
I_x	= 8.232 IN⁴
F_y	= 33 KSI

5 *3" = 1'-0"*
Channel Joist Section Properties (600S350-97)

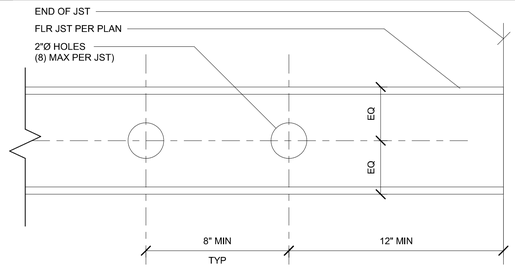

4 *3" = 1'-0"*
Elevation - Allowable Jst Holes2

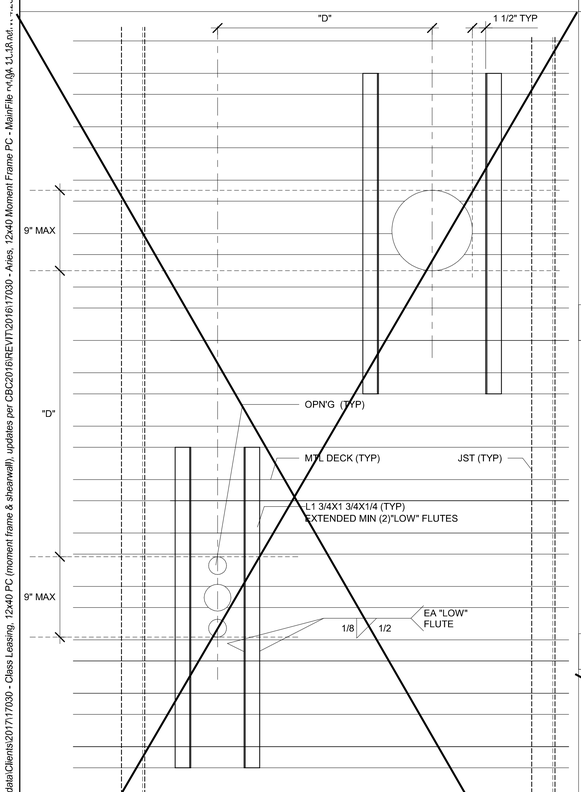

1. THIS DETAIL IS FOR USE ONLY FOR OPENINGS OR OPENING GROUPS THAT ARE 9'-0" OR SMALLER.

2. OPENINGS 2"Ø OR LESS NOT OCCURING IN THE LOWER FLUTE DO NOT REQUIRE REINFORCING AND MAY BE CORED THRU THE CONCRETE.

3. IF "D" IS LESS THAN 32" THEN THE GROUP OF OPENINGS MUST BE BLOCKED OUT WITH ADDITIONAL FRAMING.

4. PRIOR TO CONCRETE POUR, BLOCK OUT THE OPENINGS. AFTER THE CONCRETE HAS BEEN CURED THE DECK MAY BE CUT.

16 *1 1/2" = 1'-0"*
Typ Deck Penetrations (CONC FLR)4

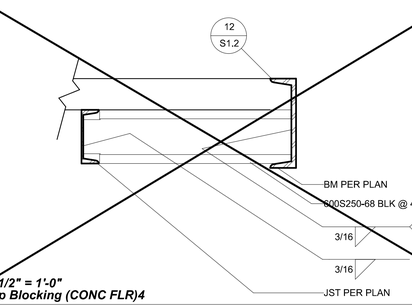

13 *1 1/2" = 1'-0"*
Typ Blocking (CONC FLR)4

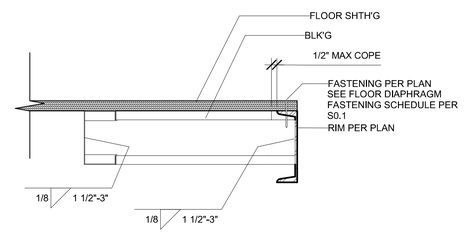

8 *1 1/2" = 1'-0"*
Typ Blk'g Connection @ Rim (WD FLR)4

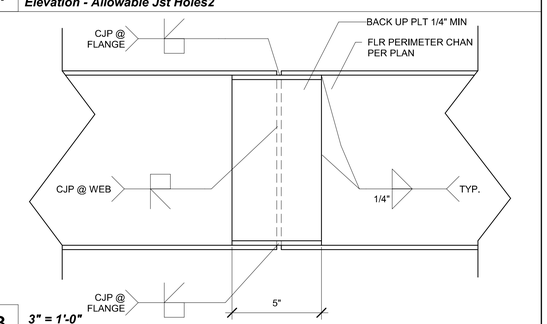

3 *3" = 1'-0"*
Flr Perimeter Beam Splice4

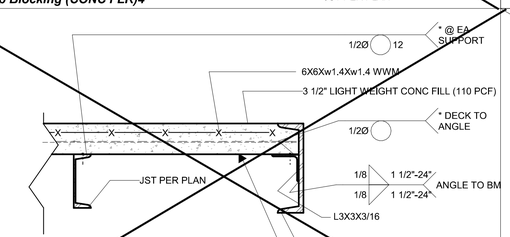

12 *1 1/2" = 1'-0"*
Typ End Beam Connection @ Rim (CONC FLR)4

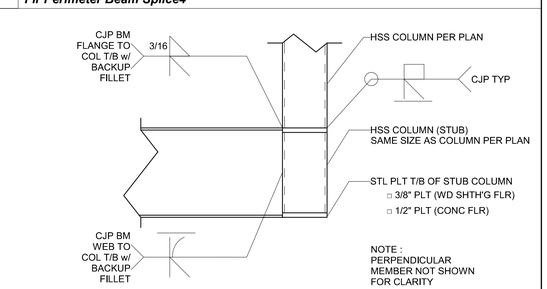

2 *1 1/2" = 1'-0"*
Typ Flr Bm to Column Connection4

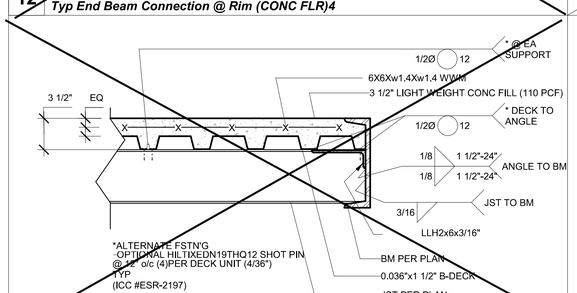

11 *1 1/2" = 1'-0"*
Typ Side Beam Connection @ Rim (CONC FLR)4

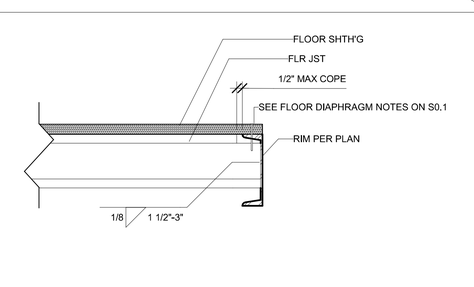

6 *1 1/2" = 1'-0"*
Typ Joist Connection @ Rim (WD FLR)4

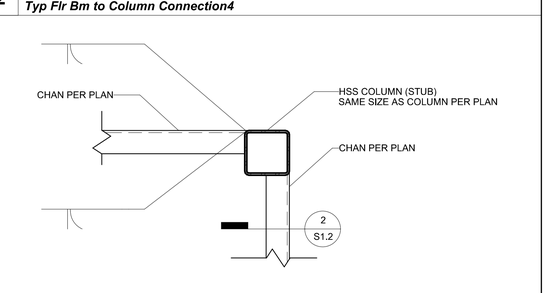

1 *1 1/2" = 1'-0"*
Typ Corner Connection4

IDENTIFICATION STAMP
DIV. OF THE STATE ARCHITECT
APP: 01-119031 INC:
REVIEWED FOR
SS ☑ FLS ☑ ACS ☑
DATE: 10/22/2020

PROFESSIONAL STAMP

REGISTERED PROFESSIONAL ENGINEER
D. R. TAVARES
No. S3380
STRUCTURAL
STATE OF CALIFORNIA

11.28.2018

THE PLANS, IDEAS & DESIGNS SHOWN ON THESE DRAWINGS ARE THE PROPERTY OF R&S TAVARES ASSOCIATES, INC. DEVISED SOLELY FOR THIS CONTRACT. THESE PLANS SHALL NOT BE USED, IN WHOLE OR IN PART, FOR ANY PURPOSE FOR WHICH THEY WERE NOT INTENDED WITHOUT THE EXPRESS WRITTEN CONSENT OF R&S TAVARES ASSOCIATES, INC. ©

CLIENT

CLASS LEASING LLC
1221 Harley Knox Boulevard
Perris, CA 92571

ORIGINAL PC STATE AGENCY APPROVAL

FILE NUMBER: PC-128
IDENTIFICATION STAMP
DIVISION OF THE STATE ARCHITECT
APP. NO: 04 - 116501 INCR :
AC RM FLS RF SS KR
DATE 2/13/2019

PROJECT TITLE
12' x 40'

PROJECT SPECIFIC STATE AGENCY APPROVAL

Revision Schedule

#	Description	Date

SHEET TITLE
STRUCTURAL DETAILS (FLOOR)

PROJECT NUMBER
17030

DRAWN BY
rMc/SM

CHECKED BY
JA/RT

DATE
11.28.2018

SHEET NO.
S1.2

SHEET OF SHEETS

Proprietary Property of Class Leasing
Proprietary Property of Class Leasing

\\192.168.10.5\data\Clients\2017\17030 - Class Leasing, 12x40 PC (moment frame & shearwall), updates per CBC2016\REVIT\2016\17030 - Aries, 12x40 Moment Frame PC - MainFile v4.0(A 11.28.pd
5/9/2018 4:53:53 PM

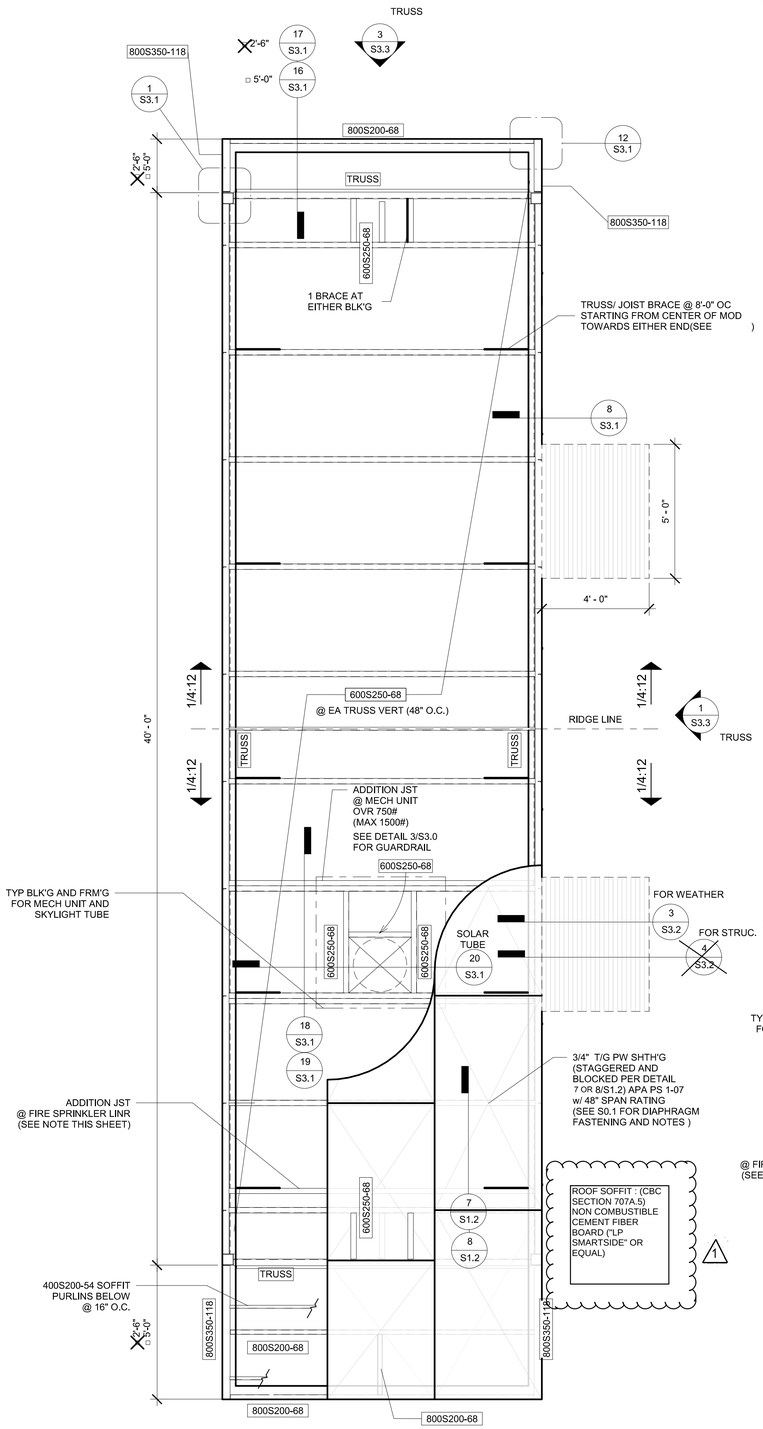

NOTES:

FIRE SPRINKLER
ADDITIONAL ROOF JOIST FOR FIRE SPRINKLER LINE AS REQ'D LOCATION OF FIRE SPRINKLER AND ADDITIONAL JOIST TO BE DETERMINED

2 *3/8" = 1'-0"*
Dual Roof Framing Plan

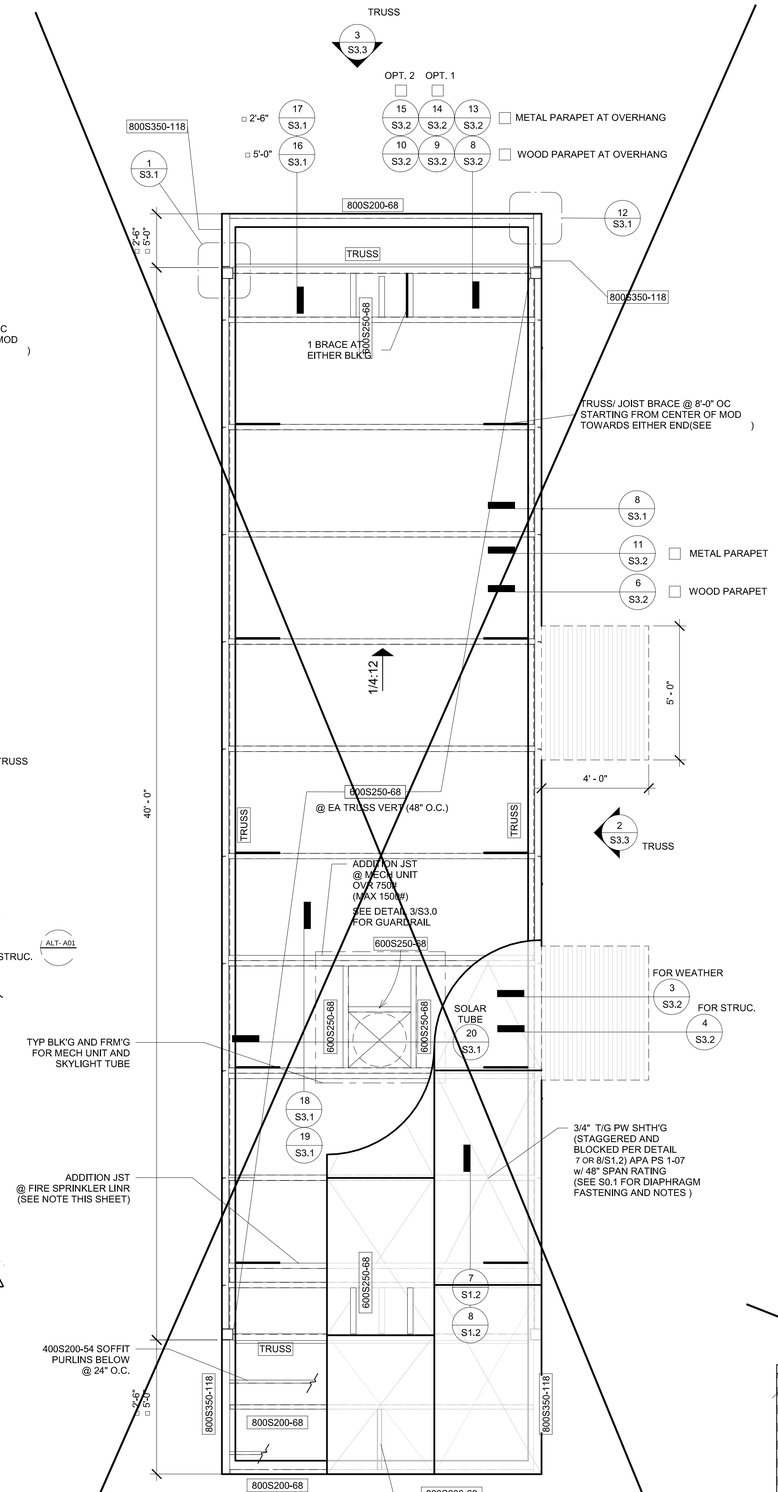

NOTES:

FIRE SPRINKLER
ADDITIONAL ROOF JOIST FOR FIRE SPRINKLER LINE AS REQ'D LOCATION OF FIRE SPRINKLER AND ADDITIONAL JOIST TO BE DETERMINED

1 *3/8" = 1'-0"*
Mono Roof Framing Plan

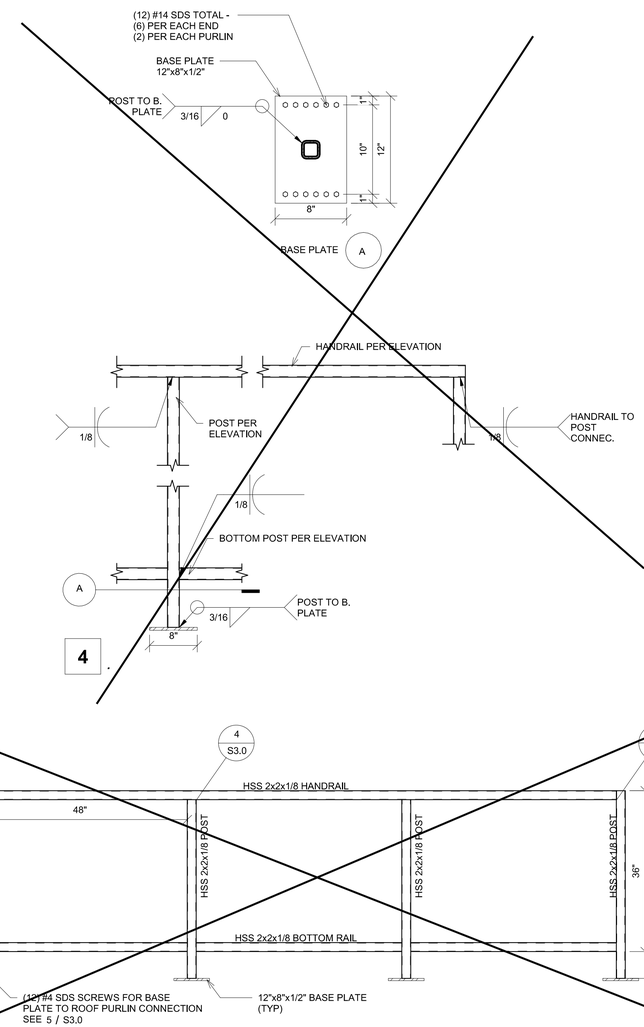

3 ***GUARDRAIL DETAIL***

IDENTIFICATION STAMP
DIV. OF THE STATE ARCHITECT
APP: 01-119031 INC:
REVIEWED FOR
SS ☑ FLS ☑ ACS ☑
DATE: 10/22/2020

PROFESSIONAL STAMP

REGISTERED PROFESSIONAL ENGINEER
RAMIN V. D. RAFATI
No. S3380
STRUCTURAL
STATE OF CALIFORNIA

11.28.2018

THE PLANS, IDEAS & DESIGNS SHOWN ON THESE DRAWINGS ARE THE PROPERTY OF R&S TAVARES ASSOCIATES, INC. DEVISED SOLELY FOR THIS CONTRACT. THESE PLANS SHALL NOT BE USED, IN WHOLE OR IN PART, FOR ANY PURPOSE FOR WHICH THEY WERE NOT INTENDED WITHOUT THE EXPRESS WRITTEN CONSENT OF R&S TAVARES ASSOCIATES, INC. ©

CLIENT

CLASS LEASING LLC
1221 Harley Knox Boulevard
Perris, CA 92571

ORIGINAL PC STATE AGENCY APPROVAL

FILE NUMBER: PC-128
IDENTIFICATION STAMP
DIVISION OF THE STATE ARCHITECT
APP. NO: 04 - 116501 INCR :
AC RM FLS RF SS KR
DATE 2/13/2019

PROJECT TITLE
12' x 40'

PROJECT SPECIFIC STATE AGENCY APPROVAL

Revision Schedule

#	Description	Date
1	ADD WUI SPECIFICATION	

SHEET TITLE
ROOF FRAMING PLAN

PROJECT NUMBER
17030

DRAWN BY
rMc

CHECKED BY
RT

DATE
11.28.2018

SHEET NO.
S3.0

SHEET OF SHEETS

Proprietary Property of Class Leasing
Proprietary Property of Class Leasing
Proprietary Property of Class Leasing

5/7/2018 7:49:38 PM. C:\Users\Cesar\Documents\J7030 - Ayres - 12x40 Moingt Ennne PC - MainFile - High Seismic.rvt-§ 26.1.8_Cesar.rvt

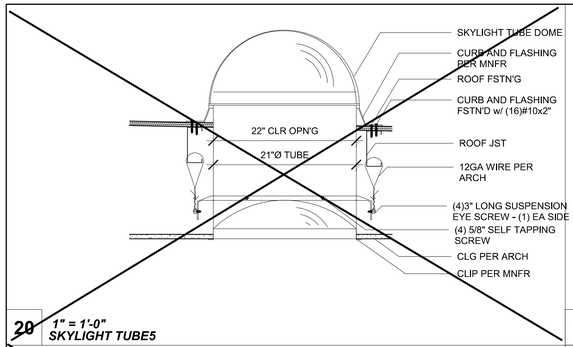

20 *1" = 1'-0"*
SKYLIGHT TUBE5

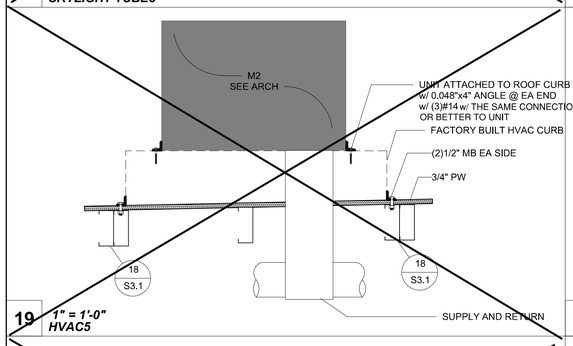

19 *1" = 1'-0"*
HVAC5

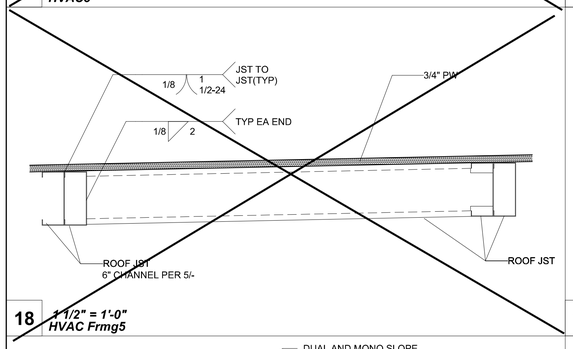

18 *1 1/2" = 1'-0"*
HVAC Frmg5

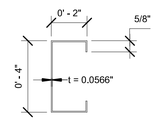

OVERHANG CHANNEL SECTION PROPERTIES
400S200-54
A-1003, GRADE 50, TYPE H
t = 0.0566"
S_x = 0.623 IN^3
I_x = 1.292 IN^4
F_y = 50 KSI

15 *3" = 1'-0"*
Soffit Channel Section Properties5

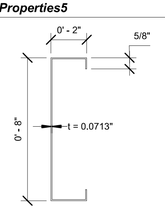

OVERHANG CHANNEL SECTION PROPERTIES
800S200-68
A-1003, GRADE 50, TYPE H
t = 0.0713"
S_x = 2.035 IN^3
I_x = 8.140 IN^4
F_y = 50 KSI

14 *3" = 1'-0"*
Fascia Channel Section Properties5

13 *3" = 1'-0"*
Typ Soffit Joist Connection6

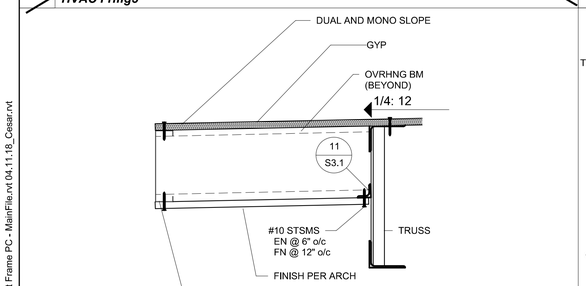

17 *1 1/2" = 1'-0"*
2'-6" Overhang @ Endwall6

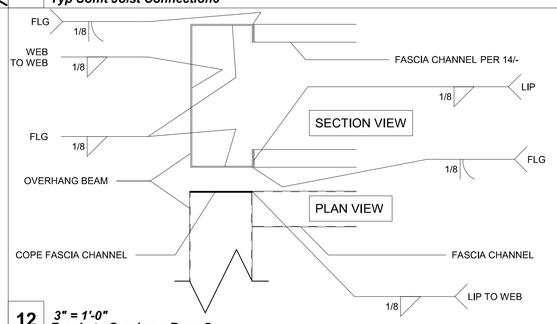

12 *3" = 1'-0"*
Fascia to Overhang Beam5

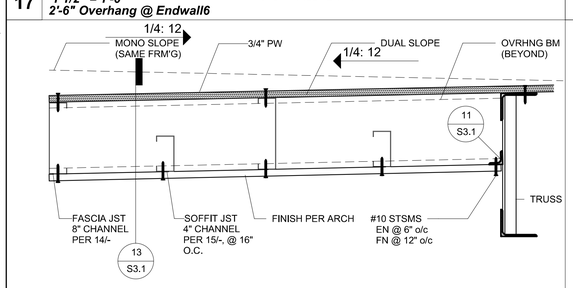

16 *1 1/2" = 1'-0"*
5'-0" Overhang @ Endwall6

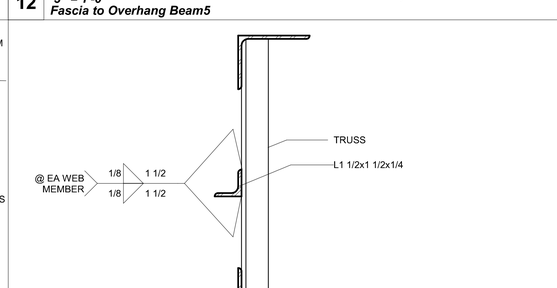

11 *3" = 1'-0"*
Angle to Truss6

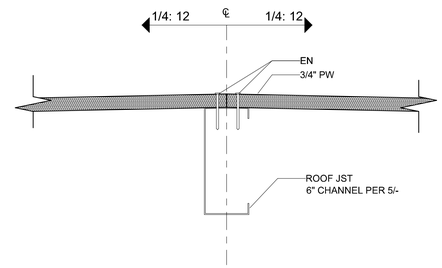

10 *3" = 1'-0"*
Roof @ Ridge5

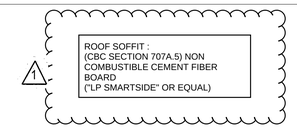

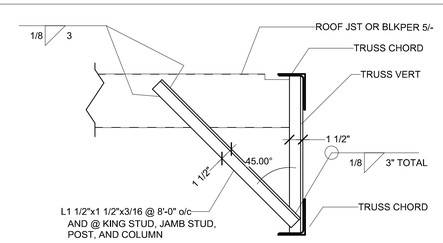

8 *1 1/2" = 1'-0"*
Typ Roof Jst Bracing6

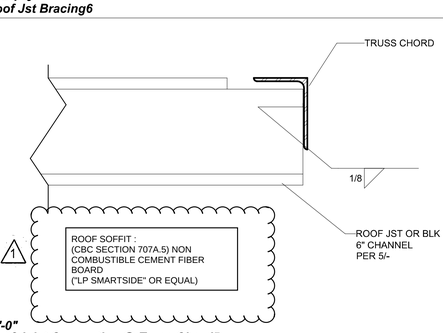

7 *3" = 1'-0"*
Typ Roof Joist Connection @ Truss Chord5

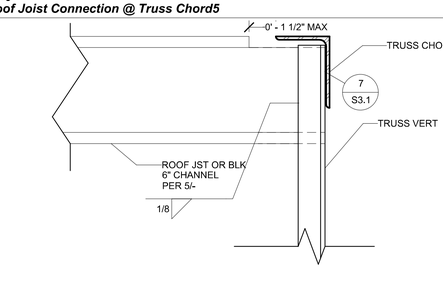

6 *3" = 1'-0"*
Typ Roof Joist Connection @ Truss Vert5

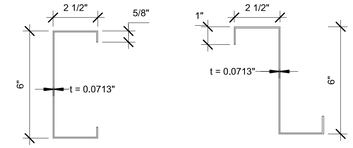

CHANNEL JOIST SECTION PROPERTIES
600S250-68 OR Z6X2.5X5/8-14GA
A-1003, GRADE 50, TYPE H
t = 0.0713"
S_x = 1.508 IN^3
I_x = 4.727 IN^4
F_y = 50 KSI

5 *3" = 1'-0"*
Roof Channel Joist Section Properites5

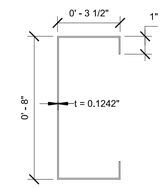

OVERHANG CHANNEL SECTION PROPERTIES
800S350-118
A-1003, GRADE 50, TYPE H
t = 0.1242"
S_x = 5.1831 IN^3
I_x = 20.041 IN
F_y = 50 KSI

4 *3" = 1'-0"*
Overhang Beam Section Properites5

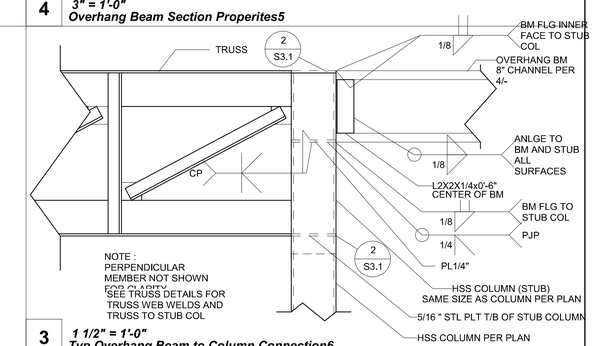

3 *1 1/2" = 1'-0"*
Typ Overhang Beam to Column Connection6

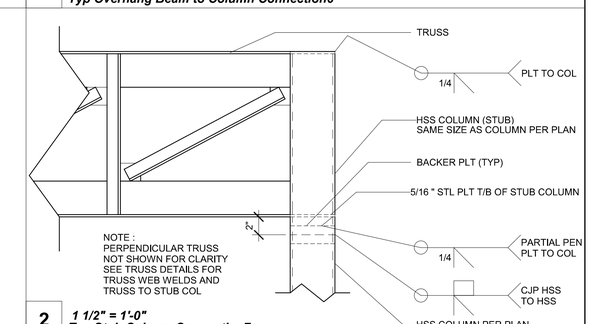

2 *1 1/2" = 1'-0"*
Typ Stub Column Connection7

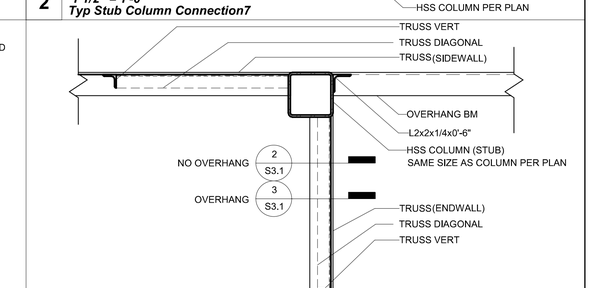

1 *1 1/2" = 1'-0"*
Typ Corner Connection @ Roof5

IDENTIFICATION STAMP
DIV. OF THE STATE ARCHITECT
APP: 01-119031 INC:
REVIEWED FOR
SS ☑ FLS ☑ ACS ☑
DATE: 10/22/2020

PROFESSIONAL STAMP

REGISTERED PROFESSIONAL ENGINEER
D. P. Rowell
No. S3380
STRUCTURAL
STATE OF CALIFORNIA
11.28.2018

THE PLANS, IDEAS & DESIGNS SHOWN ON THESE DRAWINGS ARE THE PROPERTY OF R&S TAVARES ASSOCIATES, INC. DEVISED SOLELY FOR THIS CONTRACT. THESE PLANS SHALL NOT BE USED, IN WHOLE OR IN PART, FOR ANY PURPOSE FOR WHICH THEY WERE NOT INTENDED WITHOUT THE EXPRESS WRITTEN CONSENT OF R&S TAVARES ASSOCIATES, INC. ©

CLIENT

CLASS LEASING LLC
1221 Harley Knox Boulevard
Perris, CA 92571

ORIGINAL PC STATE AGENCY APPROVAL

FILE NUMBER: PC-128
IDENTIFICATION STAMP
DIVISION OF THE STATE ARCHITECT
APP. NO: 04 - 116501 INCR :
AC RM FLS RF SS KR
DATE 2/13/2019

PROJECT TITLE
12' x 40'

PROJECT SPECIFIC STATE AGENCY APPROVAL

Revision Schedule

#	Description	Date
1	ADD WUI SPECIFICATION	

SHEET TITLE
STRUCTURAL DETAILS (ROOF)

PROJECT NUMBER
17030

DRAWN BY
rMc

CHECKED BY
RT

DATE
11.28.2018

SHEET NO.
S3.1

SHEET OF SHEETS

Proprietary Property of Class Leasing
Proprietary Property of Class Leasing
Proprietary Property of Class Leasing

C:\Users\Cesar\Documents\17030 - Aries, 12x40 Moment Frame PC - MainFile.rvt 04.11.18_Cesar.rvt
5/4/2018 8:41:12 AM

TABLE A-SECTION CENTROID	
SECTION	CENTROID CC
L4X4X1/4	1 3/32"
L4X3X1/4(LLH)	3/4"
L4X3X1/4	1 1/4"
L1.5X1.5X3/16	7/16"

12 *1/2" = 1'-0"*
Table A: Section Centroid

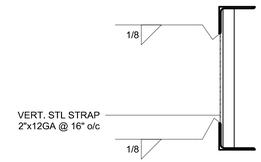

11 *1 1/2" = 1'-0"*
Strap to Truss @Sidewall- CCD#1

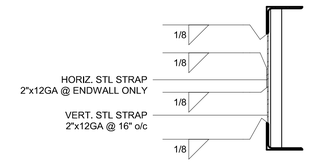

10 *1 1/2" = 1'-0"*
Strap to Truss @Endwall- CCD#1

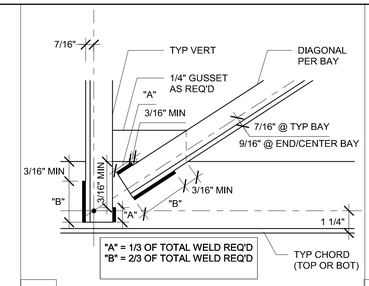

8 *3" = 1'-0"*
Typ Fillet Weld Lengths

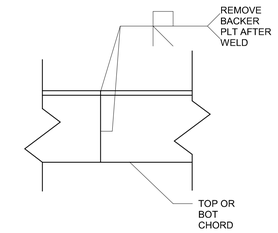

9 *3" = 1'-0"*
Typ Truss Chord Splice

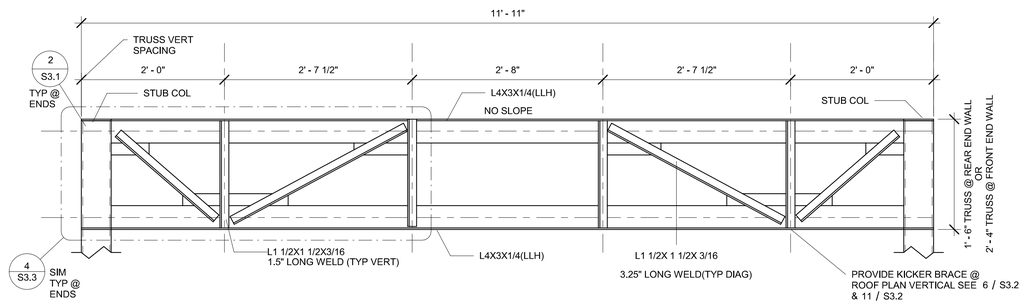

3 *1" = 1'-0"*
End Wall Truss

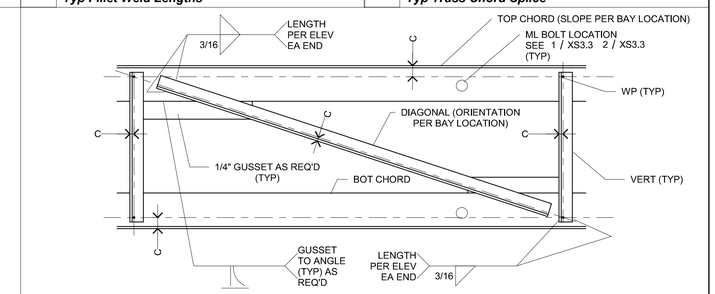

NOTE:
SEE DISTRIBUTION/XS3.3 FOR ALL FILLET WELD LENGTH

7 *1 1/2" = 1'-0"*
Typ Truss Bay

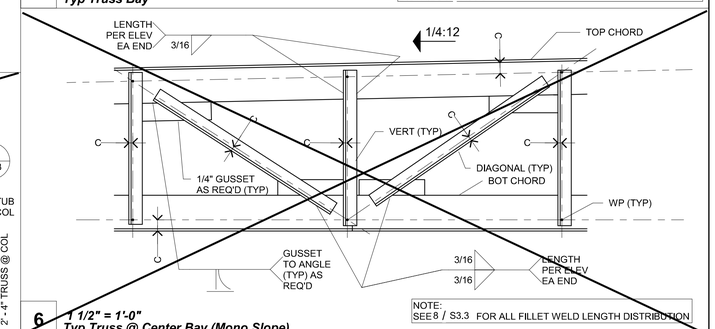

NOTE:
SEE 8 / S3.3 FOR ALL FILLET WELD LENGTH DISTRIBUTION

6 *1 1/2" = 1'-0"*
Typ Truss @ Center Bay (Mono Slope)

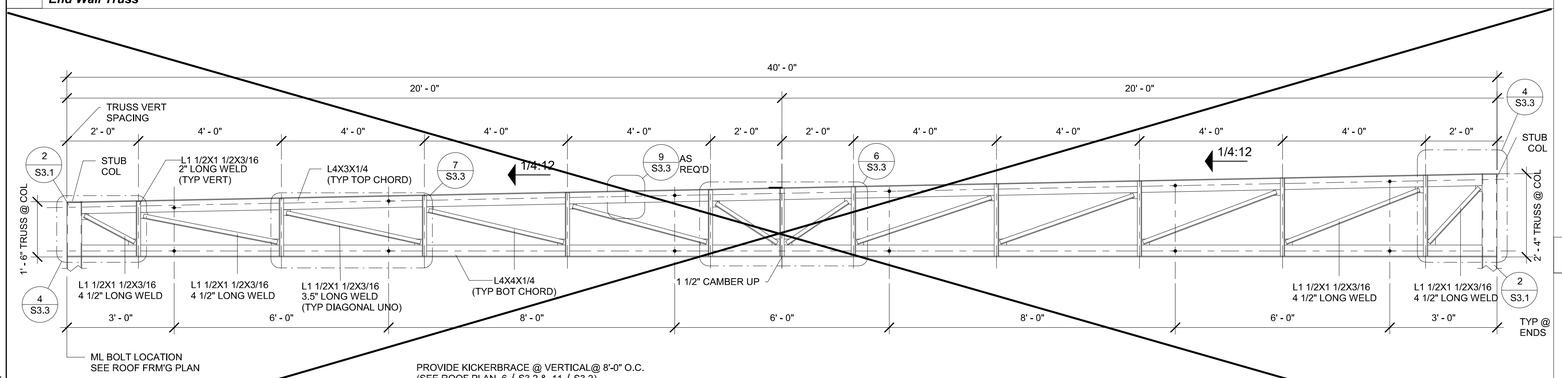

2 *1/2" = 1'-0"*
Mono Truss

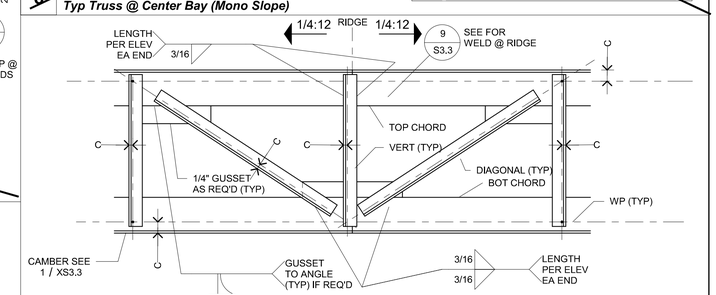

NOTE:
SEE 8 / S3.3 FOR ALL FILLET WELD LENGTH DISTRIBUTION

5 *1 1/2" = 1'-0"*
Typ Truss @ Center Bay (Dual Slope)

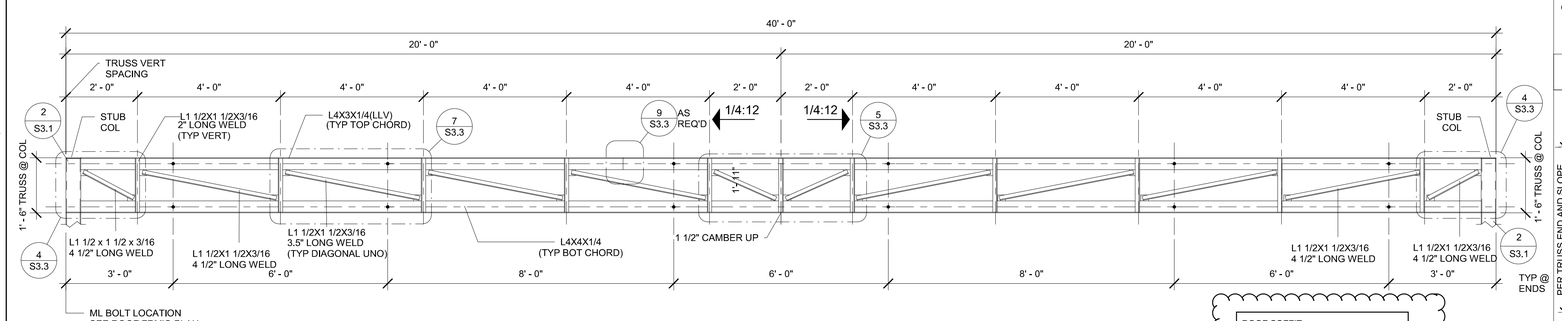

ROOF SOFFIT :
(CBC SECTION 707A.5) NON
COMBUSTIBLE CEMENT FIBER
BOARD
("LP SMARTSIDE" OR EQUAL)

1 *1/2" = 1'-0"*
Dual Truss

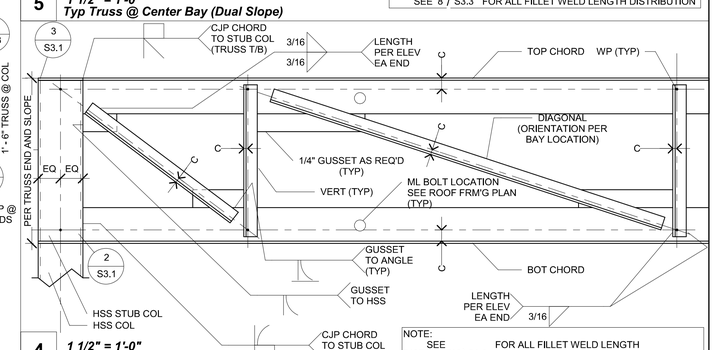

NOTE:
SEE DISTRIBUTION/XS3.3 FOR ALL FILLET WELD LENGTH

4 *1 1/2" = 1'-0"*
yp End Bay to Stub Conn

IDENTIFICATION STAMP
DIV. OF THE STATE ARCHITECT
APP: 01-119031 INC:
REVIEWED FOR
SS ☑ FLS ☑ ACS ☑
DATE: 10/22/2020

PROFESSIONAL STAMP

REGISTERED PROFESSIONAL ENGINEER
MANAY D. PATEL
No. S3380
STRUCTURAL
STATE OF CALIFORNIA

11.28.2018

THE PLANS, IDEAS & DESIGNS SHOWN ON THESE DRAWINGS ARE THE PROPERTY OF R&S TAVARES ASSOCIATES, INC. DEVISED SOLELY FOR THIS CONTRACT. THESE PLANS SHALL NOT BE USED, IN WHOLE OR IN PART, FOR ANY PURPOSE FOR WHICH THEY WERE NOT INTENDED WITHOUT THE EXPRESS WRITTEN CONSENT OF R&S TAVARES ASSOCIATES, INC. ©

CLIENT

CLASS LEASING LLC
1221 Harley Knox Boulevard
Perris, CA 92571

ORIGINAL PC STATE AGENCY APPROVAL

FILE NUMBER: PC-128
IDENTIFICATION STAMP
DIVISION OF THE STATE ARCHITECT
APP. NO: 04 - 116501 INCR :
AC RM FLS RF SS KR
DATE 2/13/2019

PROJECT TITLE
12' x 40'

PROJECT SPECIFIC STATE AGENCY APPROVAL

Revision Schedule

#	Description	Date
1	ADD WUI SPECIFICATION	

SHEET TITLE
ROOF PERIMETER TRUSS

PROJECT NUMBER
17030

DRAWN BY
rMc/SM

CHECKED BY
JA/RT

DATE
11.28.2018

SHEET NO.
S3.3

SHEET OF SHEETS

Proprietary Property of Class Leasing
Proprietary Property of Class Leasing
Proprietary Property of Class Leasing

5/21/2018 2:35:26 PM C:\Users\Cesar\Documents\17030 - Aries, 12x40 Moment Frame PC - MainFile - High Seismic.rvt 4.26.18_Cesar.rvt

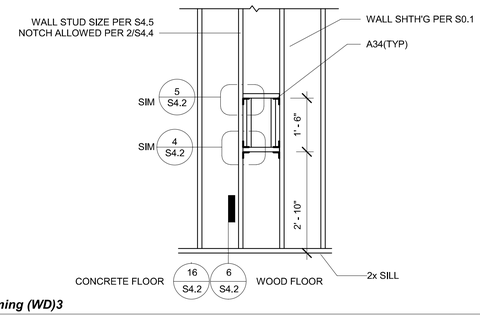

6 *1/2" = 1'-0"*
Typ Fire Extinguisher Framing (WD)3

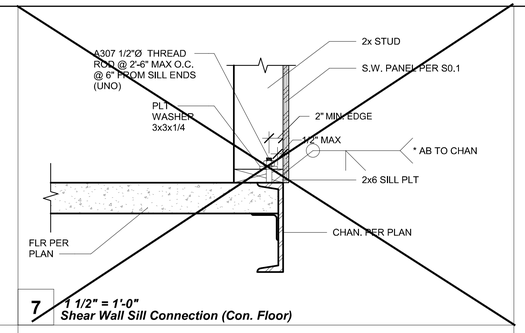

7 *1 1/2" = 1'-0"*
Shear Wall Sill Connection (Con. Floor)

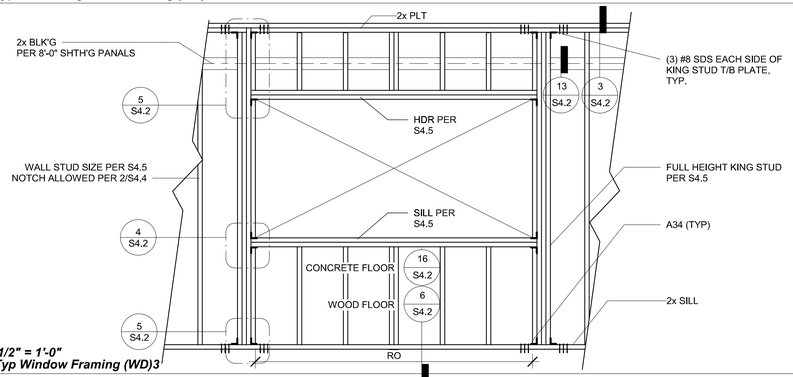

4 *1/2" = 1'-0"*
Typ Window Framing (WD)3

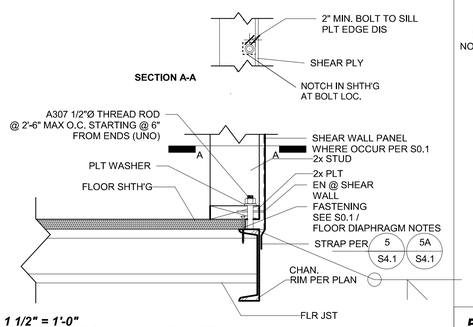

8 *1 1/2" = 1'-0"*
Shear Wall Sill Connection (Wood Floor)

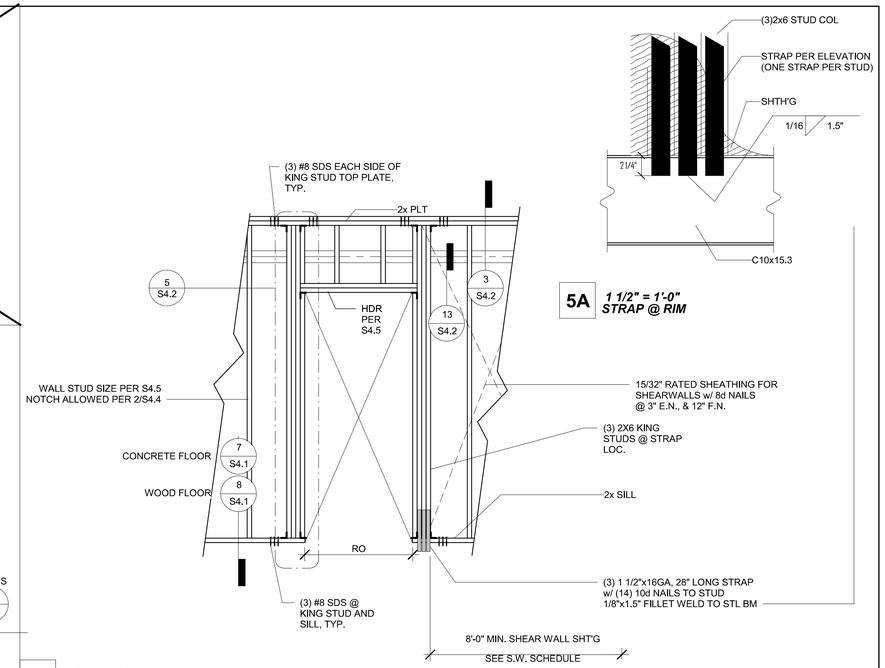

5 *1/2" = 1'-0"*
Typ Door Framing @ ENDWALL SHEARWALL

5A *1 1/2" = 1'-0"*
STRAP @ RIM

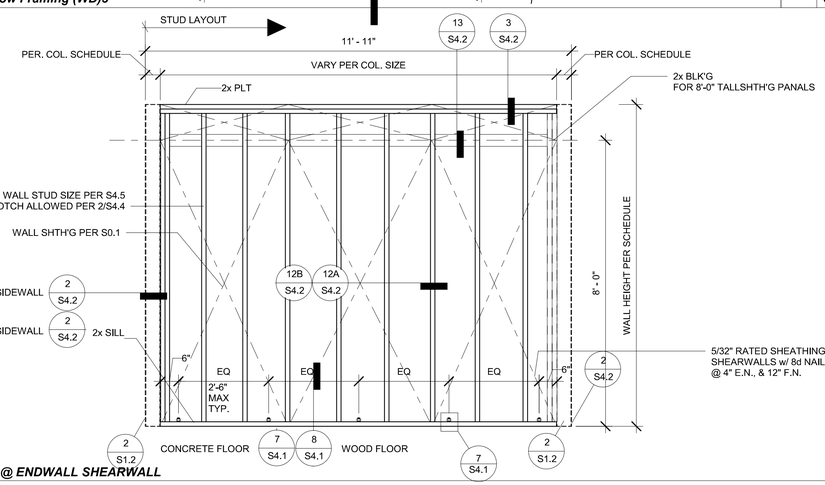

2 *1/2" = 1'-0"*
Ty Framing @ ENDWALL SHEARWALL

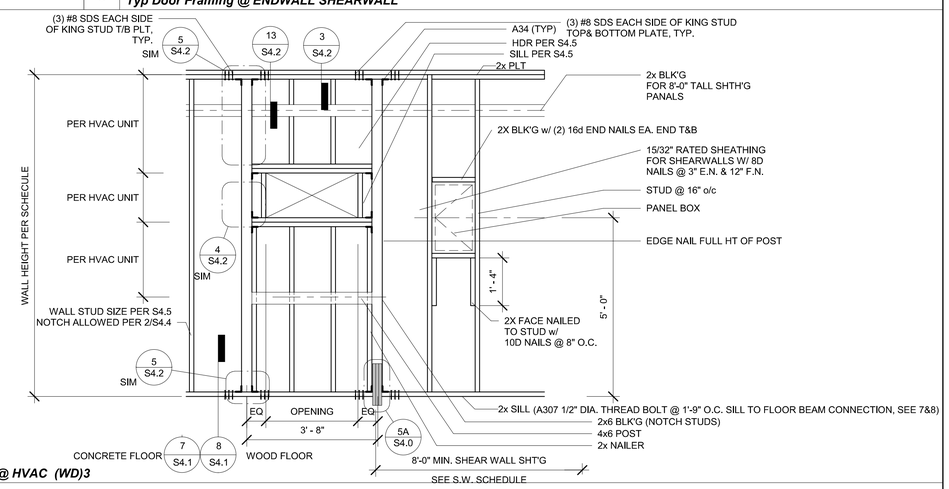

3 *1/2" = 1'-0"*
Typ Endwall Framing @ HVAC (WD)3

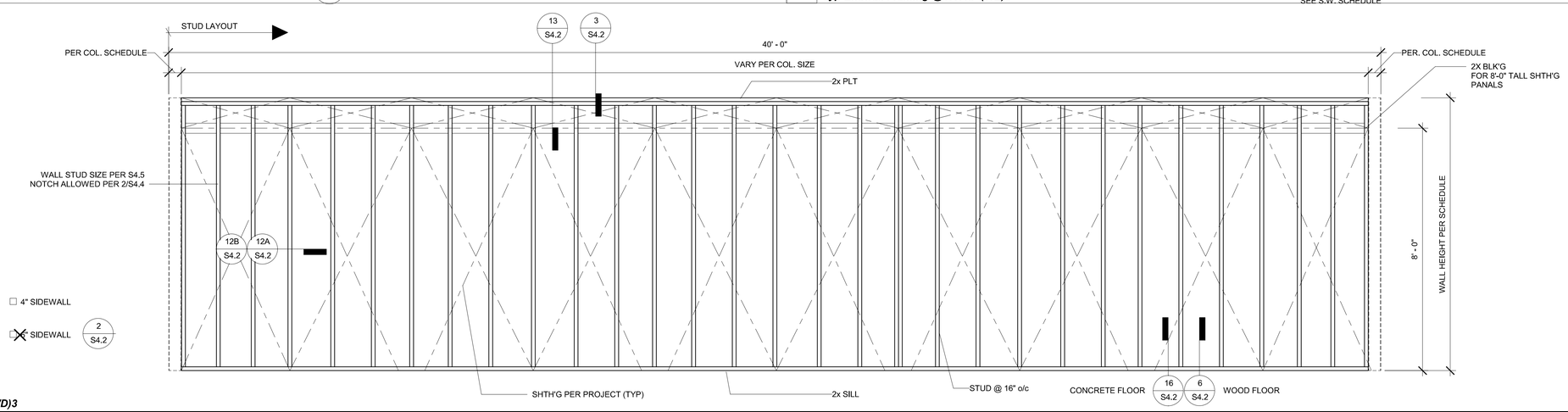

1 *1/2" = 1'-0"*
Typ Sidewall Framing (WD)3

IDENTIFICATION STAMP
DIV. OF THE STATE ARCHITECT
APP: 01-119031 INC:
REVIEWED FOR
SS ☑ FLS ☑ ACS ☑
DATE: 10/22/2020

PROFESSIONAL STAMP

REGISTERED PROFESSIONAL ENGINEER
RAMIN R. RAZAVI
No. S3380
STRUCTURAL
STATE OF CALIFORNIA

11.28.2018

THE PLANS, IDEAS & DESIGNS SHOWN ON THESE DRAWINGS ARE THE PROPERTY OF R&S TAVARES ASSOCIATES, INC. DEVISED SOLELY FOR THIS CONTRACT. THESE PLANS SHALL NOT BE USED, IN WHOLE OR IN PART, FOR ANY PURPOSE FOR WHICH THEY WERE NOT INTENDED WITHOUT THE EXPRESS WRITTEN CONSENT OF R&S TAVARES ASSOCIATES, INC. ©

CLIENT

CLASS LEASING LLC
1221 Harley Knox Boulevard
Perris, CA 92571

ORIGINAL PC STATE AGENCY APPROVAL

FILE NUMBER: PC-128
IDENTIFICATION STAMP
DIVISION OF THE STATE ARCHITECT
APP. NO: 04 - 116501 INCR :
AC RM FLS RF SS KR
DATE 2/13/2019

PROJECT TITLE
12' x 40'

PROJECT SPECIFIC STATE AGENCY APPROVAL

Revision Schedule

#	Description	Date

SHEET TITLE
WD WALL FRAMING ELEVATIONS

PROJECT NUMBER
17030

DRAWN BY
rMc/SM

CHECKED BY
JA/RT

DATE
11.28.2018

SHEET NO.
S4.1

SHEET OF SHEETS

Proprietary Property of Class Leasing
Proprietary Property of Class Leasing
Proprietary Property of Class Leasing

C:\Users\Cesar\Documents\17030 - Aries, 12x40 Moment Frame PC - MainFile - High Seismic.rvt 4.26.18_Cesar.rvt
5/21/2018 5:14:36 PM

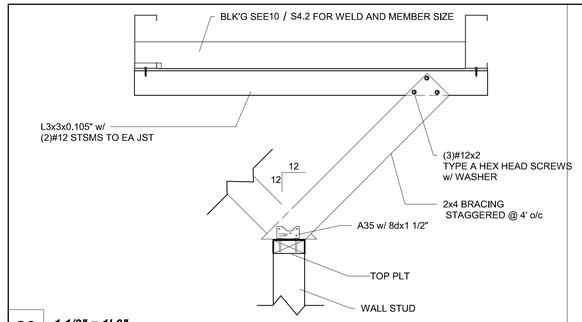

20 *1 1/2" = 1'-0"*
Sections - Interior Partition w/ Brace to Blk'g (WD)4

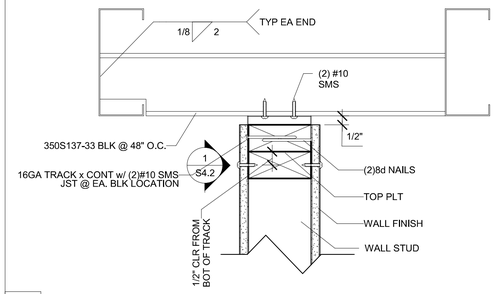

10 *3" = 1'-0"*
Sections - Interior Partition @ Blk'g (WD)4

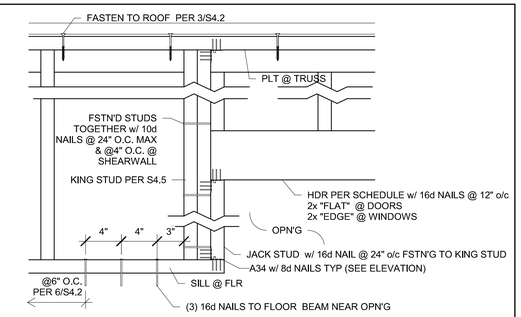

5 *1 1/2" = 1'-0"*
Elevation - Window/Door Hdr and Sill3

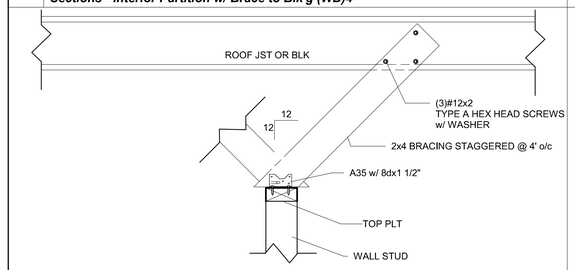

19 *1 1/2" = 1'-0"*
Sections - Interior Partition w/ Brace (WD)4

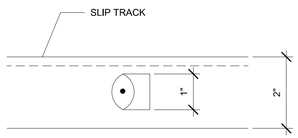

1 *6" = 1'-0"*
Sliptrack Detail

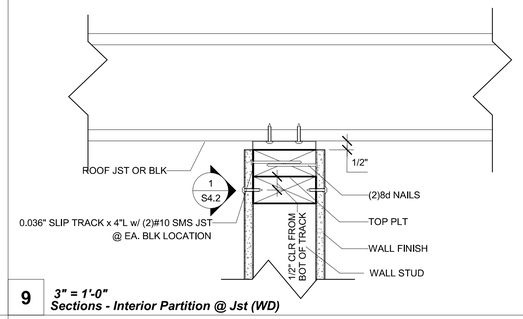

9 *3" = 1'-0"*
Sections - Interior Partition @ Jst (WD)

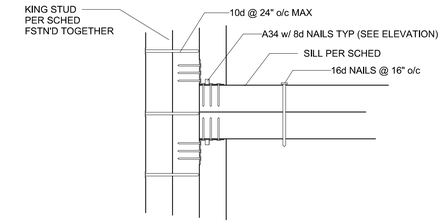

4 *3" = 1'-0"*
Elevation - Ext Wall Sill @ Window3

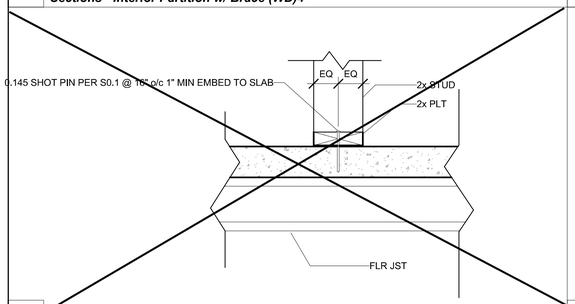

18 *1 1/2" = 1'-0"*
Typ Partition Sill Connection (CONC)4

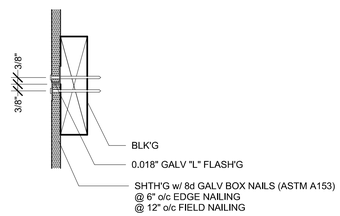

13 *3" = 1'-0"*
Shth'g @ Blk'g8

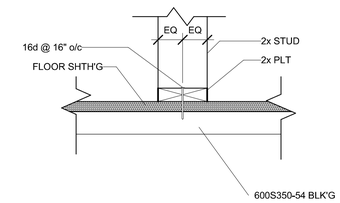

8 *1 1/2" = 1'-0"*
Typ Partition Sill Connection (WD)4

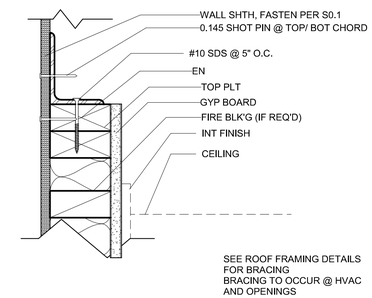

3 *3" = 1'-0"*
Section - Exterior Wall Top Plate @ Truss (WD)

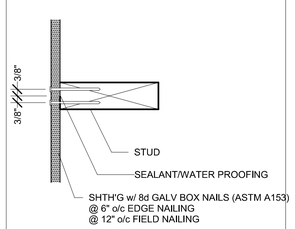

12A *3" = 1'-0"*
Shth'g @ Butt Jnt8

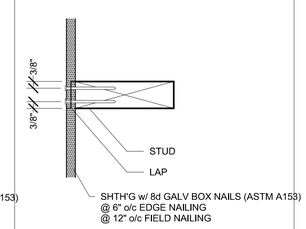

12B *3" = 1'-0"*
Shth'g @ Lap Jnt8

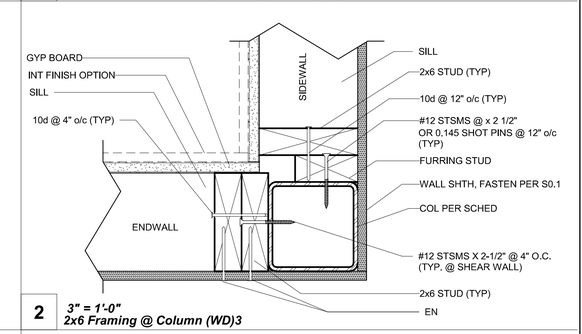

2 *3" = 1'-0"*
2x6 Framing @ Column (WD)3

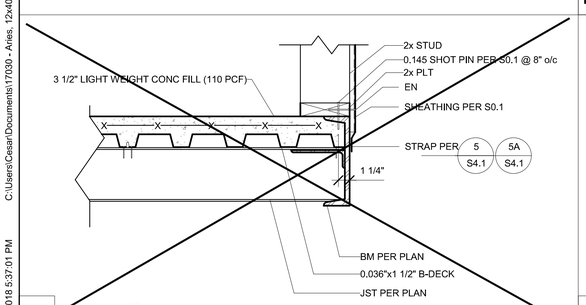

16 *1 1/2" = 1'-0"*
Wall Sill Plt Connection @ Exterior Rim (CONC)

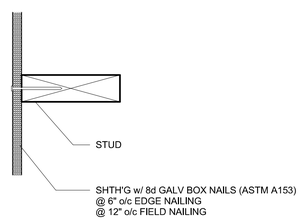

11 *3" = 1'-0"*
Shth'g @ Stud Conn7

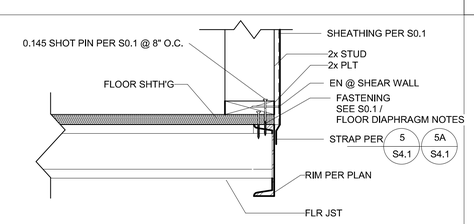

6 *1 1/2" = 1'-0"*
Wall Sill Connection @ Exterior Rim (WD)

IDENTIFICATION STAMP
DIV. OF THE STATE ARCHITECT
APP: 01-119031 INC:
REVIEWED FOR
SS ☑ FLS ☑ ACS ☑
DATE: 10/22/2020

PROFESSIONAL STAMP

REGISTERED PROFESSIONAL ENGINEER
D. R. Tavares
No. S3380
STRUCTURAL
STATE OF CALIFORNIA
11.28.2018

THE PLANS, IDEAS & DESIGNS SHOWN ON THESE DRAWINGS ARE THE PROPERTY OF R&S TAVARES ASSOCIATES, INC. DEVISED SOLELY FOR THIS CONTRACT. THESE PLANS SHALL NOT BE USED, IN WHOLE OR IN PART, FOR ANY PURPOSE FOR WHICH THEY WERE NOT INTENDED WITHOUT THE EXPRESS WRITTEN CONSENT OF R&S TAVARES ASSOCIATES, INC. ©

CLIENT

CLASS LEASING LLC
1221 Harley Knox Boulevard
Perris, CA 92571

ORIGINAL PC STATE AGENCY APPROVAL

FILE NUMBER: PC-128
IDENTIFICATION STAMP
DIVISION OF THE STATE ARCHITECT
APP. NO: 04 - 116501 INCR :
AC RM FLS RF SS KR
DATE 2/13/2019

PROJECT TITLE
12' x 40'

PROJECT SPECIFIC STATE AGENCY APPROVAL

Revision Schedule

#	Description	Date

SHEET TITLE
WALL DETAILS
(WOOD FRAMING)

PROJECT NUMBER
17030

DRAWN BY
rMc

CHECKED BY
RT

DATE
11.28.2018

SHEET NO.
S4.2

SHEET OF SHEETS

Proprietary Property of Class Leasing
Proprietary Property of Class Leasing
Proprietary Property of Class Leasing

5/7/2018 5:37:01 PM C:\Users\Cesar\Documents\17030 - Aries, 12x40 Moment Frame PC - MainFile - High Seismic.rvt 4.26.18_Cesar.rvt

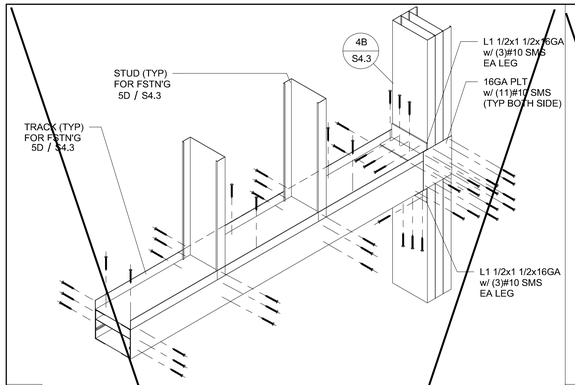

8 *1 1/2" = 1'-0"*
(3)Stud(3)Track - Type(4)4

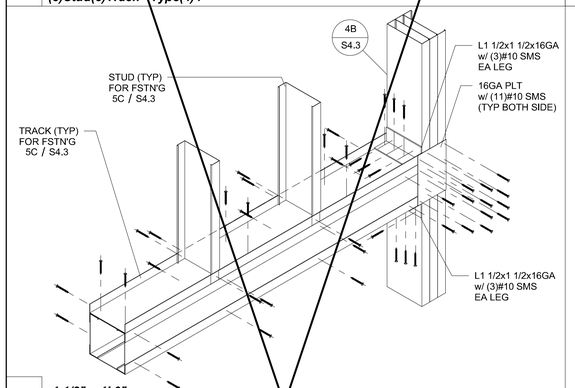

7 *1 1/2" = 1'-0"*
(3)Track(2)Stud - Type(3)4

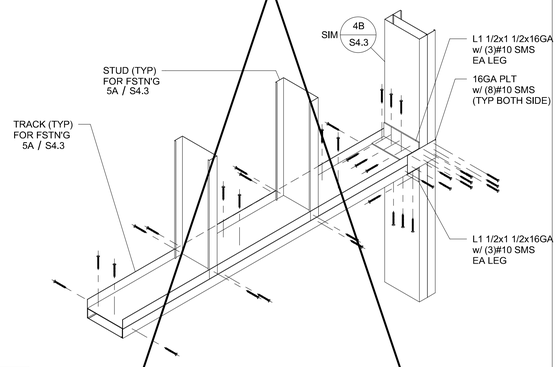

6 *1 1/2" = 1'-0"*
(2)Track(1)Stud - Type(2)4

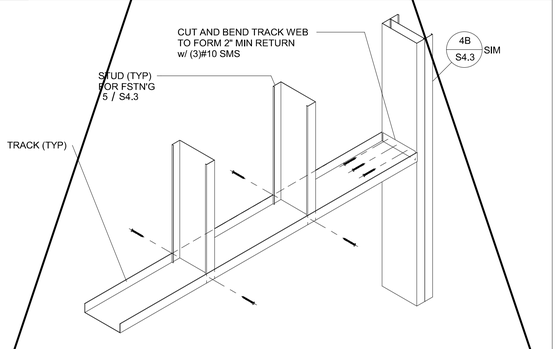

5 *1 1/2" = 1'-0"*
Single Track - Type(1)

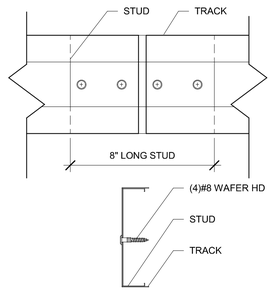

4 *3" = 1'-0"*
Track Splice4

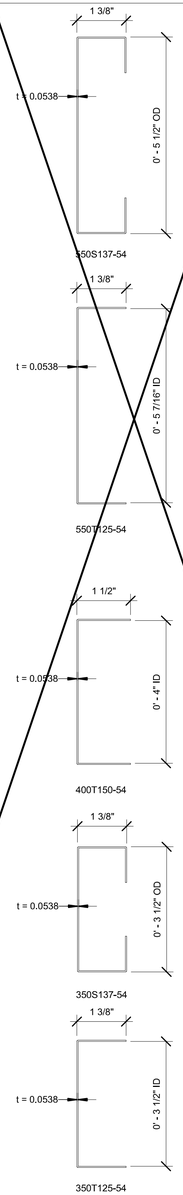

3 *6" = 1'-0"*
STUD AND TRACK4

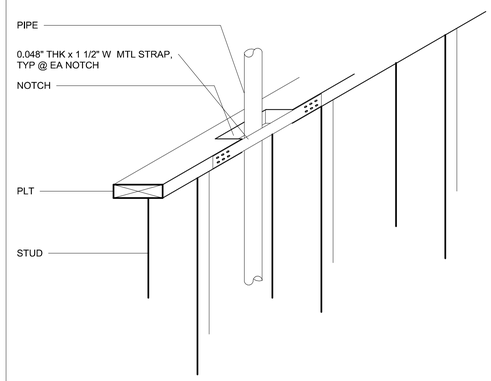

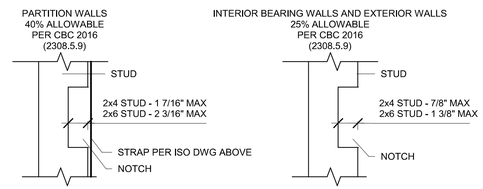

2 *1 1/2" = 1'-0"*
Plt Notch4

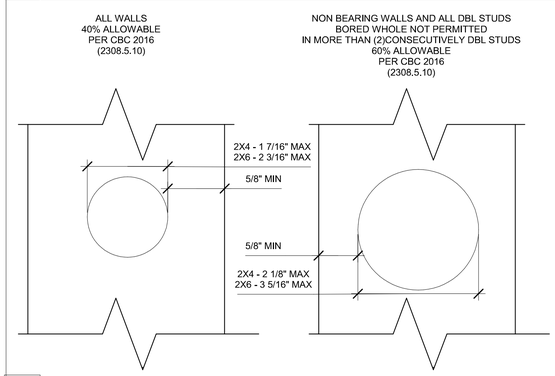

1 *6" = 1'-0"*
Stud Penetration4

IDENTIFICATION STAMP
DIV. OF THE STATE ARCHITECT
APP: 01-119031 INC:
REVIEWED FOR
SS ☑ FLS ☑ ACS ☑
DATE: 10/22/2020

PROFESSIONAL STAMP

REGISTERED PROFESSIONAL ENGINEER
D. RAY
No. S3380
STRUCTURAL
STATE OF CALIFORNIA

11.28.2018

THE PLANS, IDEAS & DESIGNS SHOWN ON THESE DRAWINGS ARE THE PROPERTY OF R&S TAVARES ASSOCIATES, INC. DEVISED SOLELY FOR THIS CONTRACT. THESE PLANS SHALL NOT BE USED, IN WHOLE OR IN PART, FOR ANY PURPOSE FOR WHICH THEY WERE NOT INTENDED WITHOUT THE EXPRESS WRITTEN CONSENT OF R&S TAVARES ASSOCIATES, INC. ©

CLIENT

CLASS LEASING LLC
1221 Harley Knox Boulevard
Perris, CA 92571

ORIGINAL PC STATE AGENCY APPROVAL

FILE NUMBER: PC-128
IDENTIFICATION STAMP
DIVISION OF THE STATE ARCHITECT
APP. NO: 04 - 116501 INCR :
AC RM FLS RF SS KR
DATE 2/13/2019

PROJECT TITLE
12' x 40'

PROJECT SPECIFIC STATE AGENCY APPROVAL

Revision Schedule

#	Description	Date

SHEET TITLE
TYP FRAMING

PROJECT NUMBER
17030

DRAWN BY
rMc

CHECKED BY
RT

DATE
11.28.2018

SHEET NO.
S4.4

SHEET OF SHEETS

Proprietary Property of Class Leasing
Proprietary Property of Class Leasing
Proprietary Property of Class Leasing

C:\Users\Cesar\Documents\17030 - Aries, 12x40 Moment Frame PC - MainFile.rvt 04.11.18_Cesar.rvt
5/4/2018 8:42:02 AM

2x4 Interior Wall Opening Schedule

COL HEIGHT	OPN'G SIZE	HDR			SILL			FULL HEIGHT KING STUD		
		Lumber	Number	Type	Lumber	Number	Type	Lumber	Number	Type
9FT	3070	HF	1	#2	-	-	-	HF	2	#2
		DF	1	#2	-	-	-	DF	2	#2
	4070	HF	1	#2	-	-	-	HF	2	#2
		DF	1	#2	-	-	-	DF	2	#2
	6040	HF	2	#2	DF	2	#2	HF	2	#2
		DF	2	#2	DF	2	#2	DF	2	#2
	8040	HF	3	#2	HF	3	#2	HF	2	#2
		DF	3	#2	DF	3	#2	DF	2	#2
10FT	3070	HF	1	#2	-	-	-	HF	2	#2
		DF	1	#2	-	-	-	DF	2	#2
	4070	HF	1	#2	-	-	-	HF	2	#2
		DF	1	#2	-	-	-	DF	2	#2
	6040	HF	2	#2	HF	2	#2	HF	2	#2
		DF	2	#2	DF	2	#2	DF	2	#2
	8040	HF	3	#2	HF	3	#2	HF	2	#2
		DF	3	#2	DF	3	#2	DF	2	#2

2x6 Exterior Wall Opening Schedule (SHTH'G FINISH)

COL HEIGHT	OPN'G SIZE	HDR			SILL			FULL HEIGHT KING STUD		
		Lumber	Number	Type	Lumber	Number	Type	Lumber	Number	Type
9FT	3070	HF	1	#2	HF	1	#2	HF	1	#2
		DF	1	#2	DF	1	#2	DF	1	#2
	4070	HF	1	#2	HF	1	#2	HF	1	#2
		DF	1	#2	DF	1	#2	DF	1	#2
	6040	HF	1	#2	HF	1	#2	HF	1	#2
		DF	1	#2	DF	1	#2	DF	1	#2
	8040	HF	2	#2	HF	1	#2	HF	2	#2
		DF	2	#2	DF	1	#2	DF	2	#2
10FT	3070	HF	1	#2	HF	1	#2	HF	1	#2
		DF	1	#2	DF	1	#2	DF	1	#2
	4070	HF	1	#2	HF	1	#2	HF	1	#2
		DF	1	#2	DF	1	#2	DF	1	#2
	6040	HF	2	#2	HF	1	#2	HF	2	#2
		DF	2	#2	DF	1	#2	DF	2	#2
	8040	HF	3	#2	HF	1	#2	HF	2	#2
		DF	3	#2	DF	1	#2	DF	2	#2

2x6 Exterior Wall Opening Schedule (PLASTER FINISH)

COL HEIGHT	OPN'G SIZE	HDR			SILL			FULL HEIGHT KING STUD		
		Lumber	Number	Type	Lumber	Number	Type	Lumber	Number	Type
9FT	3070	HF	1	#2	HF	1	#2	HF	1	#2
		DF	1	#2	DF	1	#2	DF	1	#2
	4070	HF	1	#2	HF	1	#2	HF	1	#2
		DF	1	#2	DF	1	#2	DF	1	#2
	6040	HF	2	#2	HF	1	#2	HF	2	#2
		DF	2	#2	DF	1	#2	DF	1	#2
	8040	HF	3	#2	HF	1	#2	HF	2	#2
		DF	3	#2	DF	1	#2	DF	2	#2
10FT	3070	HF	1	#2	HF	1	#2	HF	2	#2
		DF	1	#2	DF	1	#2	DF	1	#2
	4070	HF	1	#2	HF	1	#2	HF	2	#2
		DF	1	#2	DF	1	#2	DF	1	#2
	6040	HF	2	#2	HF	1	#2	HF	2	#2
		DF	2	#2	DF	1	#2	DF	2	#2
	8040	HF	3	#2	HF	1	#2	HF	2	#2
		DF	3	#2	DF	1	#2	DF	2	#2

2x4 Interior Wall Framing Schedule

COL HEIGHT	Typical Location				4ft From Building Corner			
	Lumber	Number	Type	Spacing	Lumber	Number	Type	Spacing
9	HF	1	#2	16" O.C.	-	-	-	-
	DF	1	#2	16" O.C.	-	-	-	-
10	HF	1	#2	16" O.C.	-	-	-	-
	DF	1	#2	16" O.C	-	-	-	-

2x6 Exterior Wall Framing Schedule (SHTH'G FINISH)

COL HEIGHT	Typical Location				4.8ft From Building Corner			
	Lumber	Number	Type	Spacing	Lumber	Number	Type	Spacing
9	HF	1	#2	16" O.C.	HF	1	#2	16" O.C.
	DF	1	#2	16" O.C.	DF	1	#2	16" O.C.
10	HF	1	#2	16" O.C.	HF	1	#2	16" O.C.
	DF	1	#2	16" O.C.	DF	1	#2	16" O.C.

2x6 Exterior Wall Framing Schedule (PLASTER FINISH)

COL HEIGHT	Typical Location				4.8ft From Building Corner			
	Lumber	Number	Type	Spacing	Lumber	Number	Type	Spacing
9	HF	1	#2	16" O.C.	HF	1	#2	16" O.C.
	DF	1	#2	16" O.C.	DF	1	#2	16" O.C.
10	HF	1	#2	16" O.C.	HF	1	#2	16" O.C.
	DF	1	#2	16" O.C.	DF	1	#2	16" O.C.

□ 350 Interior Wall Opening Schedule --Studs = 350S137-33 --Track = 350T125-33

Col Ht	Opn'g Size	HDR		SILL		FULL HEIGHT KING STUD		
		Type	Reference S4.4	Type	Reference S4.4	Type	Num.	Size
9'- 0"	3070	1	5	N/A	N/A	Stud	(2)	350S137-33
	4070	1	5	N/A	N/A	Stud	(2)	350S137-33
	6040	2	6	2	6	Stud	(3)	350S137-33
	8040	3	8	3	8	Stud	(3)	350S137-33
10'- 0"	3070	1	5	N/A	N/A	Stud	(2)	350S137-33
	4070	2	5	N/A	N/A	Stud	(2)	350S137-33
	6040	2	6	2	6	Stud	(3)	350S137-33
	8040	4	8	4	8	Stud	(4)	350S137-33

□ 550 Exterior Wall Opening Schedule (SHTH'G FINSIH) --Studs = 550S137-54 --Track = 550T125-54

Col Ht	Opn'g Size	HDR		SILL		FULL HEIGHT KING STUD		
		Type	Reference S4.4	Type	Reference S4.4	Type	Num.	Size
9'- 0"	3070	2	6	N/A	N/A	Stud	(2)	550S137-54
	4070	3	7	3	N/A	Stud	(2)	550S137-54
	6040	3	7	3	6	Stud	(3)	550S137-54
	8040	4	8	3	6	Stud	(3)	550S137-54
10'- 0"	3070	1	6	N/A	N/A	Stud	(2)	550S137-54
	4070	2	7	N/A	N/A	Stud	(2)	550S137-54
	6040	2	7	2	6	Stud	(3)	550S137-54
	8040	4	8	4	6	Stud	(4)	550S137-54

□ 550 Exterior Wall Opening Schedule (PLASTER FINSIH) --Stud = 550S137-54 --Track = 550T125-54

Col Ht	Opn'g Size	HDR		SILL		FULL HEIGHT KING STUD		
		Type	Reference S4.4	Type	Reference S4.4	Type	Num.	Size
9'- 0"	3070	2	6	N/A	N/A	Stud	(2)	550S137-54
	4070	3	7	3	N/A	Stud	(2)	550S137-54
	6040	3	7	3	6	Stud	(3)	550S137-54
	8040	4	8	3	6	Stud	(3)	550S137-54
10'- 0"	3070	1	6	N/A	N/A	Stud	(2)	550S137-54
	4070	2	7	N/A	N/A	Stud	(2)	550S137-54
	6040	2	7	2	6	Stud	(3)	550S137-54
	8040	4	8	4	6	Stud	(4)	550S137-54

□ 350 Interior Wall Framing Schedule

Column Height	Typ Wall Framing				4" From Corner Stud			
	Size	Number	Type	Spacing	Lumber	Number	Type	Spacing
9'- 0"	350S137-33	(1)	Stud	16" o/c	-	-	-	-
10'- 0"	350S137-33	(1)	Stud	16" o/c	-	-	-	-

□ 550 Exterior Wall Framing Schedule (SHTH'G FINISH)

Column Height	Typ Wall Framing				4" From Corner Stud			
	Size	Number	Type	Spacing	Lumber	Number	Type	Spacing
9'- 0"	550S137-54	(1)	Stud	16" o/c	550S137-54	(1)	Stud	16" o/c
10'- 0"	550S137-54	(1)	Stud	16" o/c	550S137-54	(1)	Stud	16" o/c

□ 550 Exterior Wall Framing Schedule (PLASTER FINISH)

Column Height	Typ Wall Framing				4" From Corner Stud			
	Size	Number	Type	Spacing	Lumber	Number	Type	Spacing
9'- 0"	550S137-54	(1)	Stud	16" o/c	550S137-54	(1)	Stud	16" o/c
10'- 0"	550S137-54	(1)	Stud	16" o/c	550S137-54	(1)	Stud	16" o/c

C:\Users\Cesar\Documents\17030 - Aries, 12x40 Moment Frame PC - MainFile.rvt 04.11.18_Cesar.rvt

5/4/2018 8:42:06 PM

IDENTIFICATION STAMP
DIV. OF THE STATE ARCHITECT
APP: 01-119031 INC:
REVIEWED FOR
SS ☑ FLS ☑ ACS ☑
DATE: 10/22/2020

PROFESSIONAL STAMP

REGISTERED PROFESSIONAL ENGINEER
CESAR A. D. PACHECO
No. S3380
STRUCTURAL
STATE OF CALIFORNIA

11.28.2018

THE PLANS, IDEAS & DESIGNS SHOWN ON THESE DRAWINGS ARE THE PROPERTY OF R&S TAVARES ASSOCIATES, INC. DEVISED SOLELY FOR THIS CONTRACT. THESE PLANS SHALL NOT BE USED, IN WHOLE OR IN PART, FOR ANY PURPOSE FOR WHICH THEY WERE NOT INTENDED WITHOUT THE EXPRESS WRITTEN CONSENT OF R&S TAVARES ASSOCIATES, INC. ©

CLIENT

CLASS LEASING LLC
1221 Harley Knox Boulevard
Perris, CA 92571

ORIGINAL PC STATE AGENCY APPROVAL

FILE NUMBER: PC-128
IDENTIFICATION STAMP
DIVISION OF THE STATE ARCHITECT
APP. NO: 04 - 116501 INCR :
AC RM FLS RF SS KR
DATE 2/13/2019

PROJECT TITLE
12' x 40'

PROJECT SPECIFIC STATE AGENCY APPROVAL

Revision Schedule

#	Description	Date

SHEET TITLE
FRAMING SCHEDULES

PROJECT NUMBER
17030

DRAWN BY
rMc

CHECKED BY
C RT er

DATE
11.28.2018

SHEET NO.
S4.5

SHEET OF SHEETS

Proprietary Property of Class Leasing
Proprietary Property of Class Leasing

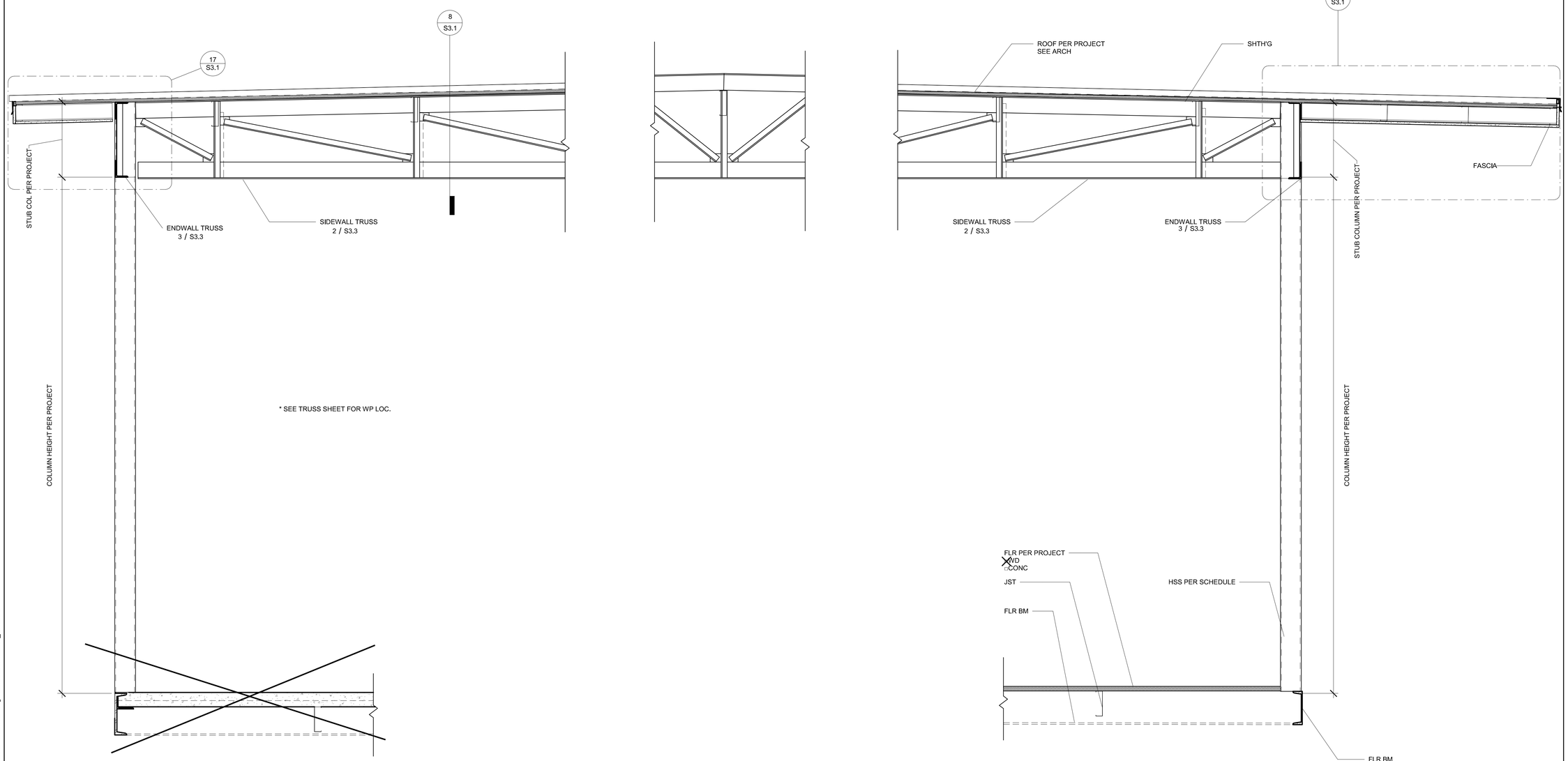

1 1" = 1'-0"
Structural Section (DUAL)4

C:\Users\Cesar\Documents\17030 - Aries, 12x40 Moment Frame PC - MainFile - High Seismic.rvt 4.26.18_Cesar.rvt

5/7/2018 7:43:57 PM

IDENTIFICATION STAMP
DIV. OF THE STATE ARCHITECT
APP: 01-119031 INC:
REVIEWED FOR
SS ☑ FLS ☑ ACS ☑
DATE: 10/22/2020

PROFESSIONAL STAMP

REGISTERED PROFESSIONAL ENGINEER
MANNY D. FRECH
No. S3380
STRUCTURAL
STATE OF CALIFORNIA

11.28.2018

THE PLANS, IDEAS & DESIGNS SHOWN ON THESE DRAWINGS ARE THE PROPERTY OF R&S TAVARES ASSOCIATES, INC. DEVISED SOLELY FOR THIS CONTRACT. THESE PLANS SHALL NOT BE USED, IN WHOLE OR IN PART, FOR ANY PURPOSE FOR WHICH THEY WERE NOT INTENDED WITHOUT THE EXPRESS WRITTEN CONSENT OF R&S TAVARES ASSOCIATES, INC. ©

CLASS LEASING LLC
1221 Harley Knox Boulevard
Perris, CA 92571

ORIGINAL PC STATE AGENCY APPROVAL

FILE NUMBER: PC-128
IDENTIFICATION STAMP
DIVISION OF THE STATE ARCHITECT
APP. NO: 04 - 116501 INCR :
AC RM FLS RF SS KR
DATE 2/13/2019

PROJECT TITLE
12' x 40'

PROJECT SPECIFIC STATE AGENCY APPROVAL

Revision Schedule

#	Description	Date

SHEET TITLE
LONG SECTION - (DUAL)

PROJECT NUMBER
17030

DRAWN BY
rMc/SM

CHECKED BY
RT

DATE
11.28.2018

SHEET NO.
S5.1

SHEET OF SHEETS

Proprietary Property of Class Leasing Proprietary Property of Class Leasing Proprietary Property of Class Leasing

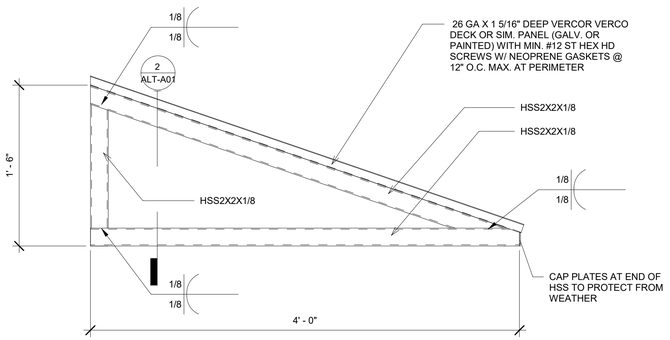

1 *1 1/2" = 1'-0"*
SIDE VIEW

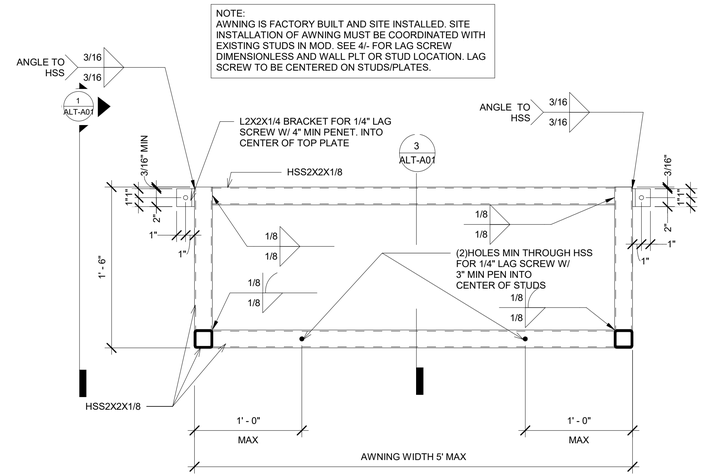

2 *1 1/2" = 1'-0"*
LONGITUDINAL SECTION

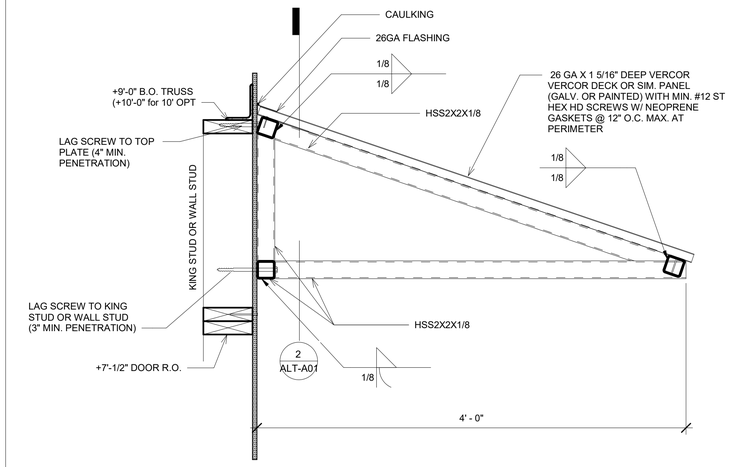

3 *1 1/2" = 1'-0"*
TRANSVERSE SECTION W/ BUILDING FRAMING/CONNECTION

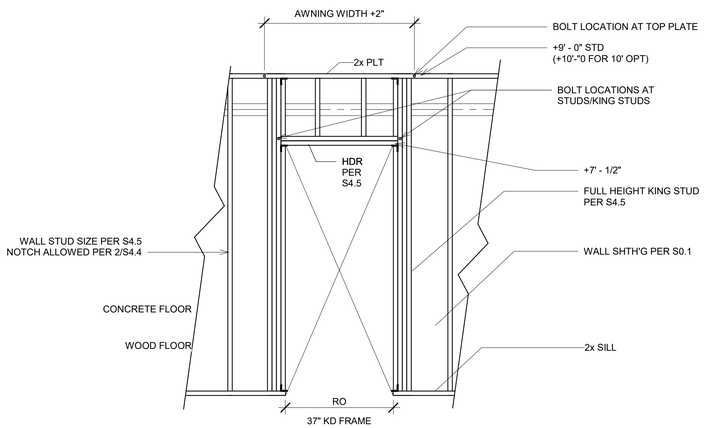

4 *1/2" = 1'-0"*
Typ Door Framing (WD)

IDENTIFICATION STAMP
DIV. OF THE STATE ARCHITECT
APP: 01-119031 INC:
REVIEWED FOR
SS ☑ FLS ☑ ACS ☑
DATE: 10/22/2020

PROFESSIONAL STAMP

4.9.2020

THE PLANS, IDEAS & DESIGNS SHOWN ON THESE DRAWINGS ARE THE PROPERTY OF R&S TAVARES ASSOCIATES, INC. DEVISED SOLELY FOR THIS CONTRACT. THESE PLANS SHALL NOT BE USED, IN WHOLE OR IN PART, FOR ANY PURPOSE FOR WHICH THEY WERE NOT INTENDED WITHOUT THE EXPRESS WRITTEN CONSENT OF R&S TAVARES ASSOCIATES, INC. ©

CLIENT

CLASS LEASING LLC
1221 Harley Knox Boulevard
Perris, CA 92571

R&S TAVARES ASSOCIATES
DESIGN ◆ CONSULTING ◆ PROJECT
11777 BERNARDO PLAZA COURT, SUITE 105
SAN DIEGO, CA 92128
WWW.RSTAVARES.COM

ORIGINAL PC STATE AGENCY APPROVAL

PROJECT TITLE

AWNING DESIGN

PROJECT SPECIFIC
STATE AGENCY APPROVAL

Revision Schedule

#	Description	Date

SHEET TITLE

AWNING FRAMING AND CONNECTION DETAILS

PROJECT NUMBER
20043

DRAWN BY
rMc

CHECKED BY
BR

DATE
04/09/2020

SHEET NO.
ALT-A01

SHEET OF SHEETS

4/9/2020 11:57:51 AM M:\2020\20043 - Class Leasing, PC Awning\REVIT\Class Leasing.rvt

Sheet List

Sheet Number	Sheet Name
E2.3	120' X 40' T24 CZ 16 (WALL AC)
E2.1	120'x40' T24 CZ 16 (WALL AC)
E2.2	120'x40' T24 CZ 16 (WALL AC)
Cover	
A0.0	COVER SHEET
A0.0.1	PROJECT OPTIONS SCHEDULE
A0.1	TYPICAL KEY PLAN AND SCHEDULES, GEN NOTES,
A0.2	SIGNAGE AND SYMBOLS
~~A0.3~~	~~DSA-103 T&I CONCRETE FLOORS~~
A0.4	DSA-103 T&I PLYWOOD FLOORS
A0.5	CALGREEN SPEC'S
Architectural	
A1.0	24x40 FLOOR PLAN
~~A1.1~~	~~36x40 FLOOR PLAN~~
A1.2	48x40 FLOOR PLAN
A2.1	ARCHITECTURAL DETAILS (WOOD FRAMING SHTG FINISH)
~~A2.2~~	~~ARCHITECTURAL DETAILS (WOOD FRAMING PLASTER FINISH)~~
~~A2.3~~	~~ARCHITECTURAL DETAILS (MTL FRAMING SHTG FINISH)~~
~~A2.4~~	~~ARCHITECTURAL DETAILS (MTL FRAMING PLASTER FINISH)~~
~~A2.5~~	~~ARCHITECTURAL DETAILS (1-HR WOOD FRAMING SHTG FINISH)~~
~~A2.6~~	~~ARCHITECTURAL DETAILS (1-HR WOOD FRAMING PLASTER FINISH)~~
~~A2.7~~	~~ARCHITECTURAL DETAILS (1-HR MTL FRAMING SHTG FINISH)~~
~~A2.8~~	~~ARCHITECTURAL DETAILS (1-HR MTL FRAMING PLASTER FINISH)~~
A2.9	ARCHITECTURAL DETAILS (FLOOR)
~~A3.0~~	~~ADDITIONAL FIRE RATING DETAILS AND NOTES~~
A3.1	SINGLE OCC. BATHROOM
A3.2	RCP
A3.2.1	CEILING NOTES
A3.3	CEILING DETAILS (T-GRID)
~~A3.4~~	~~CEILING DETAILS (GYP BOARD)~~
A4.0.1	ROOF PLAN MONO SLOPE (STANDING SEAM)
A4.0.2	ROOF PLAN DUAL SLOPE (STANDING SEAM)
A4.1	ROOF DETAILS (STANDING SEAM)
~~A4.2.1~~	~~ROOF PLAN MONO SLOPE (EPDM)~~
~~A4.2.2~~	~~ROOF PLAN DUAL SLOPE (EPDM)~~
~~A4.3~~	~~ROOF DETAILS (EPDM)~~
~~A4.4.1~~	~~ROOF PLAN w/ PARAPET MONO SLOPE (EPDM)~~
A4.5	ARCHITECTURAL DETAILS (PARAPET)
A5.0	SIDEWALL ELEVATION
A5.1	ENDWALL ELEVATIONS
A5.2	INTERIOR ELEVATIONS
A6.0	SECTION - STANDING SEAM (MONO)
~~A6.0.1~~	~~SECTION - STANDING SEAM (DUAL)~~
~~A6.1~~	~~SECTION - EPDM (DUAL)~~
A6.2	SECTION
~~A6.3~~	~~SECTION - EPDM (MONO)~~
A7.0	ADDITIONAL OPTION DETAILS
A7.1	ADDITIONAL OPTION DETAILS
A7.2	ADDITIONAL OPTION DETAILS
MEP	
E1.0	ELECTRICAL PLAN 24x40
E1.1	ELECTRICAL SCHEDULES 24x40
~~E1.2~~	~~ELECTRICAL PLAN 36x40~~
~~E1.3~~	~~ELECTRICAL SCHEDULE 36x40~~
E1.4	ELECTRICAL PLAN 48x40
E1.5	ELECTRICAL SCHEDULE 48x40
M0.1	MISCELLANEOUS NOTES & DETAILS
M2.1	120'x40' T24 CZ 16 (WALL AC)
M2.2	120'x40' T24 CZ 16 (WALL AC)
M2.3	120'x40' T24 CZ 16 (WALL AC)
M2.4	120'x40' T24 CZ 16 (WALL AC)
M5.1	MECHANICAL CEILING PLAN 24x40
M5.2	MECHANICAL ROOF MOUNT 24x40
~~M6.1~~	~~MECHANICAL CEILING PLAN 36x40~~
~~M6.2~~	~~MECHANICAL ROOF MOUNT 36x40~~
M7.1	MECHANICAL CEILING PLAN 48x40
M7.2	MECHANICAL ROOF MOUNT 48x40
P1.0	TYPICAL PLUMBING DETAILS
Foundation	
~~F1.10~~	~~WOOD FOUNDATION NOTES SCHED FOR BLDG W/ 50+15~~
~~F1.11~~	~~WOOD FOUNDATION PLAN 24x40 BLDG W/ 50+15~~
~~F1.12~~	~~WOOD FOUNDATION 36x40 BLDG W/ 50+15~~
~~F1.13~~	~~WOOD FOUNDATION PLAN 48x40 BLDG W/ 50+15~~
~~F1.14~~	~~MODLINE "B" W/ EXTERIOR WALLS BACK-TO-BACK 100 PSF~~
~~F1.20~~	~~WOOD FOUNDATION NOTES SCHED FOR BLDG W/ 100PSF~~
~~F1.21~~	~~WOOD FOUNDATION PLAN 24x40 BLDG W/ 100 PSF~~
~~F1.22~~	~~WOOD FOUDATION PLAN 36x40 BLDG W/ 100 PSF~~
~~F1.23~~	~~WOOD FOUNDATION PLAN 48x40 BLDG W/ 100 PSF~~
~~F1.24~~	~~MODLINE "B" W/ EXTERIOR WALLS BACK-TO-BACK 100 PSF~~
~~F1.30~~	~~WOOD FOUNDATION NOTES SCHED FOR BLDG W/ 150 PSF~~
~~F1.31~~	~~WOOD FOUNDATION PLAN 24X40 BLDG W/ 150 PSF~~
~~F1.32~~	~~WOOD FOUNDATION PLAN 36x40 BLDG W/ 150 PSF~~
~~F1.33~~	~~WOOD FOUNDATION PLAN 48x40 BLDG W/ 150 PSF~~
~~F1.34~~	~~MODLINE "B" W/ EXTERIOR WALL BACK-TO-BACK 150 PSF~~
~~F1.40~~	~~WOOD FOUNDATION DETAILS~~
~~F2.10~~	~~CONCRETE FOUNDATION PLAN~~
~~F2.20~~	~~CONCRETE FOUNDATION DETAILS~~
~~F2.22~~	~~CONCRETE FOUNDATION DETAILS~~
~~F2.23~~	~~CONCRETE FOUNDATION DETAILS~~
Structural	
S0.1	STRUCTURAL GEN NOTES
S1.0.1	WD SHTH'G FLR FRM'G PLAN (50+15 PSF)
~~S1.0.2~~	~~WD SHTH'G FLR FRM'G PLAN (100 PSF)~~
~~S1.0.3~~	~~WD SHTH'G FLR FRM'G PLAN (150 PSF)~~
~~S1.1.1~~	~~CONC FLR FRM'G PLAN (50+15 PSF)~~
~~S1.1.2~~	~~CONC FLR FRM'G PLAN (100 PSF)~~
~~S1.1.3~~	~~CONC FLR FRM'G PLAN (150 PSF)~~
S1.2	STRUCTURAL DETAILS (FLOOR)
S3.0.1	MONO SLOPE ROOF FRM'G PLAN
~~S3.0.2~~	~~DUAL SLOPE ROOF FRM'G PLAN~~
S3.1	STRUCTURAL DETAILS (ROOF)
~~S3.2~~	~~ROOF DETAILS (SOFFIT/PARAPET)~~
S3.3	ROOF PERIMETER TRUSS
~~S4.0~~	~~MTL WALL FRAMING ELEVATIONS~~
S4.1	WD WALL FRAMING ELEVATIONS
S4.2	WALL DETAILS (WOOD FRAMING)
~~S4.3~~	~~WALL DETAILS (MTL FRAMING)~~
S4.4	TYP FRAMING
S4.5	FRAMING SCHEDULES
S5.0	LONG. SECTION - (MONO)
~~S5.1~~	~~LONG SECTION - (DUAL)~~
SR0	MODULE PLAN AND NOTES
SR1	RAMP LANDING
SR2	LANDING FRAME
SR3	FOUNDATION PLAN
SR4	RAMP ELEVATION
SR5	RAMP DETAILS
SR6	RAMP DETAILS
SR7	STAIR CONN

C:\Users\Andrew\Documents\17016 - Aries, 24x40 PC - MainFile - Low Seismic_Andrew.rvt

3/8/2018 2:19:38 PM

Sheet List

Sheet Number	Sheet Name
Under Separate Cover	
~~FS-1~~	~~FIRE SPRINKLER DESIGN 1~~
~~FS-2~~	~~FIRE SPRINKLER DESIGN 2~~

ALT-01 48 X 40 BLDG A1 & A2
ALT-02 48 X 40 BLDG A1 & A2
ALT-03 48 X 40 BLDG A1 & A2
ALT-04 48 X 40 B1, B2, B3, B4
ALT-05 48 X 40 B1, B2, B3, B4
ALT-06 48 X 40 B1, B2, B3, B4
ALT-07 MULTI PURPOSE BUILDING "C"
ALT-08 MULTI PURPOSE BUILDING "C"
ALT- D1 ALTERATION

CLASS LEASING LLC

LOW SEISMIC
DESIGN CRITERIA

PC # 04-116504

24' x 40' EXPANDABLE TO 120' x 40'

DESIGN CODES

PARTIAL LIST OF APPLICABLE CODES AS OF February 28, 2017

2016 Administrative Code (CAC), Part 1, Title 24 C.C.R. *
2016 California Building Code (CBC), Part 2, Title 24 C.C.R.
(2015 International Building Code with 2016 California Amendments)
2016 California Electrical Code (CEC), Part 3, Title 24 C.C.R.
(2014 National Electrical Code with 2016 California Amendments)
2016 California Mechanical Code (CMC), Part 4, Tiltle 24 C.C.R.
(2015 Uniform Mechanical Code with 2016 California Amendments)
2016 California Plumbing Code (CPC), Part 5, Title 24 C.C.R.
(2015 Uniform Plumbing Code with 2016 California Amendments)
2016 California Energy Code (CEC), Part 6, Title 24 C.C.R
2016 California Fire Code, Part 9, Title 24 C.C.R.
(2015 International Fire Code with 2016 California Amendments)
2016 California Green Building Standards Code, Part 11, Title 24 C.C.R.
2016 California Referenced Standards, Part 12, Title 24 C.C.R
Title 19 C.C.R., Public Safety, State Fire Marshal Regulations.
2013 ASME A17.1 (W/ CSA B44-13) Safety Code for Elevators and Escalators

PARTIAL LIST OF APPLICABLE STANDARDS

NFPA 13	Automatic Sprinkler Systems	2016 Edition
NFPA 14	Standpipe Systems	2013 Edition
NFPA 17	Dry Chemical Extinguishing Systems	2013 Edition
NFPA 17a	Wet Chemical Systems	2013 Edition
NFPA 20	Stationary Pumps	2016 Edition
NFPA 22	Water Tanks for Private Fire Protection	2013 Edition
NFPA 24	Private Fire Mains	2016 Edition
NFPA 72	National Fire Alarm Code	2016 Edition
NFPA 80	Fire Doors and Other Opening Protectives	2016 Edition
NFPA 92	Standard for Smoke Control Systems	2015 Edition
NFPA 253	Critical Radiant Flux of Floor Covering Systems	2015 Edition
NFPA 2001	Clean Agent Fire Extinguishing Systems	2015 Edition
ICC 300	ICC Standards on Bleachers, Folding and Telescoping Seating and Grand stands	2012 Edition
UL 300	Fire Testing of Fire Extinguishing System for Protection Of Restaurant Cooking Areas	2005 Edition
UL 464	Audible Signal Appliances	2003 Edition
UL 521	Heat Detectors for Fire Protective Signaling Systems	1999 Edition

Reference Code Section for NFPA Standards - 2016 CBC (SFM) Chapter 35. See Chapter 35 for State of California amendments to NFPA Standards.

* California Administrative Code, Part 1, Chapter 10, Administrative Regulations for the California Energy Commission (CEC).

ACOUSTICAL CONTROL (EXTERIOR) REQUIREMENTS

Per the 2016 CCR, Title 24, Part 11 (CALGREEN CODE) Section 5.507.4. This pre-check building is not allowed to be placed:
- Within the 65 CNEL noise contour of a airport;
- Within the 65 CNEL or Ldn noise contour of a freeway, expressway, railroad, or industrial source guideway;
- Or in a location exposed to a noise level of 65 dB Leq-1Hr, during any hour of operation.

CODE	ADOPTED YEAR	ITEM
NFPA 13	2016	AUTOMATIC SPRINKLER SYSTEMS
NFPA 72	2016	NATIONAL FIRE ALARM CODE w/ CALIFORNIA AMENDMENTS

NOTE: VISUAL DEVICES PER UL STANDARD 1971

THIS PC HAS A "PRE-DESIGNED" FIRE SPRINKLER SYSTEM INSTALLED.
SEE BELOW FOR SITE REQUIREMENTS BY OWNER

IT IS THE OWNERS RESPONSIBILITY TO ENSURE THE MINIMUM FLOW (GPM) AND PRESSURE (PSI)CAN BE ATTAINED AT THE BASE OF THE RISER AT THE PROPOSED SITE FOR EACH PROPOSED BUILDING.

THIS PC REQUIRES
MINIMUM GPM : 250
MINIMUM PSI : 35

FAILURE TO ATTAIN THE MIN GPM/PSI MAY NECESSITATE THE INSTALLATION OF ONE OR MORE OF THE FOLLOWING ITEMS/EQUIPMENTS.

A. WATER TANK
1. FIRE PUMP
2. BACK UP FIRE SUPPLY

B. ADDITIONAL UNDERGROUND FIRE LINE TAPS
C. ALL OR ANY COMBINATION OF THE ABOVE OR ANY OTHERS AS REQUIRED TO ENSURE PROPER OPERATION OF THE AFSS

THE FOLLOWING MUST BE SUPPLIED TO DSA AT THE TIME OF SUBMITTAL WITH THE SITE PLAN FOR EACH PROPOSED BUILDING WITH AN AFSS.
1. MINIMUM GPM/PSI REQUIRED
2. WATER FLOW DATA (SEE DSA AFFS GUIDELINES)
3. SITE PLAN SHOWING THE LOCATION OF THE "FLOW" AND "TEST" HYDRANTS (FULLY DIMENSIONED)
4. ALL (NEW AND EXISTING) UNDERGROUND FIRE LINES/PIPING -LENGTH AND SIZE SHOWING LOCATION AND METHOD OF UNDERGROUND PIPING RESTRAINTS TO TEST HYDRANT
5. LOCATION OF ALL (NEW AND EXISTING) ;
   A. FIRE HYDRANTS
   B. POST INDICATORS
   C. FIRE DEPARTMENT CONNECTIONS
   D. PRESSURE REDUCERS
   E. BACK-FLOW PREVENTION/DETECTOR CHECK VALVES
   F. OTHER FIRE RELATED ITEM/EQUIPMENTS APPLICABLE
6. HYDRAULIC CALCULATIONS FOR THE UNDERGROUND PIPING WITH THE AVAILABLE GPM/PSI AT THE BASE OF EACH AFSS RISER (MUST MEET OR EXCEED MIN REQ'T)
7. ANY CHANGES TO THE CONFIGURATION (WALLS,CEILINGS, CONSTRUCTION TYPE) OR OCCUPANCY OF THE PC WILL NECESSITATE ADDITIONAL/REVISED HYDRAULIC CALCULATIONS

@	AT
AB	ANCHOR BOLT
ABC	AGGREGATE BASE COURSE
ABV	ABOVE
AD	AREA DRAIN
ADD	ADDENDUM
ADH	ADHESIVE
ADJ	ADJACENT, ADJUSTABLE
ADOH	ALTERNATE DIRECTION OF HOOK
AFF	ABOVE FINISHED FLOOR
AGG	AGGREGATE
ALT	ALTERNATE
ALUM	ALUMINUM
ANCH	ANCHOR (AGE)
ANOD	ANODIZED
APPRX	APPROXIMATE
ARCH	ARCHITECT (URAL)
ASPH	ASPHALT
AUTO	AUTOMATIC
B	BOTTOM
BB	BOND BEAM
BC	BOTTOM CHORD
BD	BOARD
BEG	BEGIN (ING)
BEL	BELOW
BIT	BITUMINOUS
BJT	BED JOINT
BLDG	BUILDING
BLK	BLOCK ('G, ING)
BLW	BELOW
BM	BEAM
BMK	BENCH MARK
BO*	BOTTOM OF ___________
BPL	BEARING PLATE
BRD	BOARD
BRDG	BRIDGING
BRG	BEARING
BRK	BRICK
BRZ	BRONZE
BS	BOTH SIDES
BTWN	BETWEEN
BVL	BEVELED
BW	BOTH WAYS
C	CHANNEL, COMPRESSION
CAD	CADMIUM
CAM	CAMBER
C/C	CENTER TO CENTER
CEM	CEMENT
CF	CUBIC FOOT
CHAM	CHAMFER
CI	CAST IRON
CIP	CAST-IN-PLACE
CIR	CIRCLE
CIRC	CIRCUMFERENCE
CJ	CONSTRUCTION JOINT
CJT	CONTROL JOINT
CLG	CEILING
CLK	CAULK, ('G, ING)
CLKG	CAULKING
CLR	CLEAR
CLS	CLOSURE
CM	CENTIMETER
CMP	CORRUDATED METAL PIPE
CMU	CONCRETE MASONRY UNIT
CNTR	CENTER
COL	COLUMN
COG	CENTER OF GRAVITY
COMB	COMBINATION
COMP	COMPRESS (ED)(ION)(IBLE)
COMPO	COMPOSITE
CONN	CONNECT (ION)
CONC	CONCRETE
CONST	CONSTRUCT (ION) (ED)
CONT	CONTINUE, CONTINUOUS
CONTR	CONTRACTOR
COR	CORRUGATED
CP	COMPLETE PENETRATION
CPG	COPING
CPR	COPPER
CRS	COURSE (S)
CS	COUNTERSINK
CTSK	COUNTERSUNK SCREW
CU	CUBIC
CX	CONNECTION
CY	CUBIC YARD
D	DEEP, DEPTH
DBL	DOUBLE
DEF	DEFLECTION
DEG	DEGREE
DEM0	DEMOLISH, DEMOLITION
DEP	DEPRESSED
DEPT	DEPARTMENT
DET	DETAIL
DIAG	DIAGONAL
DIA	DIAMETER
DIM	DIMENSION (ED)
DIV	DIVISION
DL	DEAD LOAD
DN	DOWN
DO	DITTO
DP	DAMPROOFING
DWL	DOWEL (ED)
DWG	DRAWING, (S)
E	EAST, MODULUS OF ELASTICITY
EA	EACH
EB	EXPANSION BOLT
EF	EACH FACE
EJT	EXPANSION JOINT
EL	ELEVATION
ELEC	ELECTRIC (AL)
ENCL	ENCLOSURE, ENCLOSED
ENG	ENGINEER
EQ	EQUAL, EQUALIBRIUM
EQUIP	EQUIPMENT
ESTM	ESTIMATE (ED)
EV	EXPANSION BOLT
EW	EACH WAY
EXCA	EXCAVATE (D) (ION)
(E), EXIST	EXISTING
EXMP	EXPANDED METAL PLATE
EXP	EXPOSED
EXPN	EXPANSION
EXS	EXTRA STRONG
EXT	EXTERIOR, EXTERNAL
FAS	FASTENER
FBO	FURNISHED BY OTHERS
FD	FLOOR DRAIN
FHMS	FLATHEAD MACHINE SCREW
FHS	FIRE HOSE STATION
FHWS	FLATHEAD WOOD SCREW
FIN	FINISH (ED)
FIXT	FIXTURE
FJT	FLUSH JOINT
FLR	FLOOR
FLUR	FLUORESCENT
FLEX	FLEXIBLE
FND	FOUNDATION
FO*	FACE OF ______________
FP	FIREPROOF (ED)
FP'G	FIREPROOFING
FR	FRAME (D)(ING)
FRC	FIRE RESISTANT COATING
FRGD	FORGED
FRMG	FRAMING
FT	FOOT, FEET
FTG	FOOTING
FURR	FURRED, FURRING
FV	FIELD VERIFY
GA	GAUGE
GALV	GALVANIZED
GC	GENERAL CONTRACTOR
GI	GALVANIZED IRON
GKT	GASKET
GL	GLASS, GLAZING
GLM	GLULAM
GP	GALVANIZED PIPE
GPM	GALLONS PER MINUTE
GPPL	GYPSUM PLASTER
GRVL	GRAVEL, GRANULAR
GRD	GRADE, GRADING
GRN	GRANITE
GSS	GALVANIZED SHEET STEEL
GT	GROUT
GVL	GRAVEL
GWB	GYPSUM WALLBOARD
GYP	GYPSUM
H	HIGH
HBD	HARDBOARD
HC	HOLLOW CORE
HD	HEAVY DUTY
HDNR	HARDENER
HDR	HEADER
HDWR	HARDWARE
HDWD	HARDWOOD
HES	HIGH EARLY STRENGTH CEMENT
HH	HANDHOLE
HJT	HEADJOINT
HK	HOOK
HM	HOLLOW METAL
HORIZ	HORIZONTAL
HPT	HIGH POINT
HR	HOUR
HSA	HEADED STUD ANCHOR
HSB	HIGH STRENGHT BOLT
HT	HEIGHT
HWD	HARDWOOD
ID	INSIDE DIAMETER
IN	INCHE (ES)
INCL	INCLUDE (D), INCLUDING
INSUL	INSULATE, INSULATION
INT	INTERIOR
INTM	INTERMEDIATE
INV	INVERT
JST	JOIST
JT	JOINT
K	KIP (S)
KO	KNOCKOUT
KSI	KIPS PER SQUARE INCH
L	LONG, LENGTH
LAM	LAMINATE (D)
LB	POUND, LAG BOLT
LBL	LABEL
LC	LIGHT CONTROL
LD	DEVELOPMENT LENGHT
LF	LINEAR FOOT
LH	LEFT HAND
LL	LIVE LOAD
LLH	LONG LEG HORIZONTAL
LLV	LONG LEG VERTICAL
LPT	LOW POINT
LT	LIGHT
LTL	LINTEL
LVL	LEVEL (ING)
LW	LIGHT WEIGHT
LWC	LIGHT WEIGHT CONCRETE
LWF	LIGHT WEIGHT FILL
M	METER (S) MOMENT
MATL	MATERIAL
MAS	MASONRY
MAX	MAXIMUM
MB	MACHINE BOLT
MBR	MEMBER
MCONN	MOMENT CONNECTION
MECH	MECHANICAL
MED	MEDIUM
MET	METAL
MEMB	MEMBER
MEP	MECHANICAL, ELECTRICAL, & PLUMBING
MFD	METAL FLOOR DECKING
MFR	MANUFACTURE (R) (ED)
MID	MID, MIDDLE
MIN	MINIMUM, MINUTE
MISC	MISCELLANEOUS
MM	MILLIMETER (S)
MMB	MEMBRANE
MO	MASONRY OPENING
MOD	MODEL
MODU	MODULAR
MOV	MOVABLE
MTL	MATERIAL
N	NORTH, NEW
NAT	NATURAL
NL	NAILABLE
NMT	NONMETALLIC
NO	NUMBER
NOM	NOMINAL
NTS	NOT TO SCALE
OA	OVERALL
o.c.	ON CENTER
OD	OUTSIDE DIAMETER
OH	OVERHEAD
OHMS	OVALHEAD MACHINE SCREW
OHWS	OVALHEAD WOOD SCREW
OJ	OPEN-WEB JOINT (S)
OPH	OPPOSITE HAND
OPNG	OPENING
OPP	OPPOSITE
PAR	PARALLEL
PBD	PARTICLE BOARD
PCC	PRECAST CONCRETE
PCF	POUNDS PER CUBIC FOOT
PCS	PIECES
PERF	PERFORATE (D)
PERI	PERIMETER
PFB	PREFABRICATE (D)
PFS	POUNDS PER SQUARE FOOT
PL	PLATE
PLBG	PLUMBING
PLF	POUNDS PER LINEAR FOOT
P.L.	PARALLAM
PLWD	PLYWOOD
PMT	PAVEMENT
PNL	PANEL
POSTEN	POST TENSION (D)
PRETEN	PRETENSIONED
POLY	POLYETHYLENE
PR	PAIR
PRJ	PROJECT
PSC	PRESTRESSED CONCRETE
PSF	POUNDS PER SQUARE FOOT
PSI	POUNDS PER SQUARE INCH
PT	POINT
P.T.	PRESSURE TREATED
PTC	POST-TENSIONED CONCRETE
PTD	PAINTED
PVC	POLYVINYL CHLORIDE
PVMT	PAVEMENT
QTY	QUANTITY
R	RADIUS, RISER
RAD	RADIUS
RD	ROOF DRAIN
RECT	RETANGULAR
REF	REFERENCE, REFER TO
REINF	REFORCE (D) (ING)
REM	REMOVE
REQD	REQUIRED
REQS	REQUIREMENTS
RETG	RETAINING
REV	REVISION, REVISED
RFG	ROOFING
RFH	ROOF HATCH
RFL	REFLECT (ED)(IVE)(OR)
RM	ROOM
RO	ROUGH OPENING
RT	FIRE RETARDANT TREATED
RT	RUBBER TILE
RTG	RATING
RVS	REVERSE SIDE
RVT	RIVET
S	SOUTH
SC	SOLID CORE
SCHED	SCHEDULE
SDL	SUPERIMPOSED DEAD LOAD
SDS	SELF DRILL SCREW
SE	STRUCTURAL ENGINEER
SDST	SELF-DRILL, SELF-TAP'G SCREW
SECT	SECTION
SF	SQUARE FOOT, SQUARE FEET
SHO	SHORE, SHORING
SHT	SHEET
SHTH	SHEATHING
SI	SQUARE INCH
SIM	SIMILAR
SL	SLOPE
SLNT	SEALANT
SMS	SHEET METAL SCREW
SOG	SLAB ON GRADE
SPA	SPACE, (ING)
SPC	SPACER
SPEC	SPECIFICATION (S)
SQ	SQUARE
SSTL	STAINLESS STEEL
STG	STAGGERED
STD	STANDARD
STL	STEEL
STOR	STORAGE
STRUCT	STRUCTURE
STR	STRUCTURAL
SYM	SYMETRICAL, SYMETRY
SYS	SYSTEM
T	TOP, TORSION, TREAD
T&B	TOP AND BOTTOM
T&G	TONGUE AND GROOVE
TC	TOP CHORD
TEN	TESION, TENSILE
TEMP	TEMPORARY, TEMPERATURE
THD	THREAD (ED)
THK	THICK (NESS)
TMPD	TEMPERED
TO*	TOP OF _____________
TL	TOTAL LOAD
TR	TREAD
TS	TUBE STEEL
TYP	TYPICAL
UC	UNDERCUT
UGD	UNDERGROUND
UL	UNDEREWRITERS LABORATORY
UND	UNDER
UNF	UNFINISHED
UNO	UNLESS NOTED OTHERWISE
V	SHEAR FORCE, VELOCITY
VB	VAPOR BARRIER
VER	VERIFY
VERT	VERTICAL
VG	VERTICAL GRAIN
VIF	VERIFY IN FIELD
VJ	V-JOINTED
VNR	VENEER
V.T.R.	VENT THROUGH ROOF
W	WEST, WIDTH, WIDE, WIDE FLANGE
W/	WITH
W/O	WITHOUT
WD	WOOD
WI	WROUGHT IRON
WM	WIRE MESH
WP	WATERPROFFING
WPR	WATER REPELLENT
WPT	WORKING POINT
WS	WATER STOP
WT	WEIGHT
WTW	WALL TO WALL (W/W)
WWF	WELDED WIRE FABRIC
WWM	WELDED WIRE MESH

CONSTRUCTION OF CLASSROOM BUILDING (RELOCATABLE)

SCOPE OF WORK

BUILDING DESIGN

NUMBER OF STORIES: 1
OCCUPANCY: ~~"E"~~ "B"
CONSTRUCTION TYPE: VB
FLOOR LIVE LOAD: ☒ 50+15 PSF PARTITION
☐ 100 PSF ☐ 150 PSF
FLOOR DEAD LOAD: ☒ WOOD FLOOR - 11 PSF
☐ CONC. FLOOR - 33 PSF

ROOF LIVE LOAD: 20 PSF
ROOF SNOW LOAD: 0 PSF
ROOF DEAD LOAD: 18.5 PSF (INCLUDES SPRINKLERS & 3PSF SOLAR PANEL)
RAMPLIVE LOAD: 100PSF
FLOOD DESIGN: This PC has not been designed to accommodate flood loads. If located in a zone other than X, a letter stamped and signed from a soils engineer is needed to validate the allowable soil values assumed in this PC are still applicable.

BUILDING AREA	NO OVERHANG	WITH OVERHANG (5' @ EA. END)
ALLOWABLE AREA	☐ 24x40 960 sf	☒ 24x40 1200 sf
=9,500 sf	☐ 36x40 1440 sf	☐ 36x40 1800 sf
ACTUAL AREA	☐ 48x40 1920 sf	☒ 48x40 2400 sf
=4,800 SF	☐ 60x40 2400 sf	☐ 60x40 3000 sf
	☐ 72x40 2880 sf	☐ 72x40 3600 sf
	☐ 84x40 3360 sf	☐ 84x40 4200 sf
	☐ 96x40 3840 sf	☐ 96x40 4800 sf
	☐ 108x40 4320 sf*	☐ 108x40 5400 sf*
	☐ 120x40 4800 sf*	☐ 120x40 6000 sf*

*Geo-hazard site specific report must be provided and approved by CGS for building area more than 4000 sf

ALLOWABLE SOIL PRESSURE: ☐ WOOD FTG -1000PSF ☐ CONCRETE FTG 1500PSF
FOUNDATION: ☐ WOOD ☐ CONCRETE
PC IS DESIGNED BASED ON A PINNED CONNECTION TO THE FOUNDATION.

CEC CLIMATE ZONE: 1-16

WIND DESIGN

ULTIMATE DESIGN SPEED: Vult = 130 mph, 3 sec GUST, Kzt = 1.0
RISK CATEGORY: II
EXPOSURE: C

EARTHQUAKE DESIGN

RISK CATEGORY: II
SEISMIC IMPORTANCE FACTOR: I = 1
MAPPED SPECTRAL RESPONSE: Ss = 2.14
S1 = 1.99
SITE CLASS: D
SEISMIC DESIGN CATEGORY: E
Note: For SDC (E) site specific motion analysis is not required if not in a seismic hazard zone and/or meets other exemptions in DSA IR A-4
SHORT/LONG PERIOD SITE COEFFICIENT: Fa = 1.0, Fu = 1.5
DEISIGN SPECTRAL RESPONSE: Sds = 1.00 (for building), Sd1 = 1.99,
(Sds=1.426 for other parameters non-structural component anchorage no-cap)
RESPONSE COEFFICIENT, Cs: 0.286
BASIC SEISMIC FORCE-RESISTING SYS: OMF, R = 3.5
ANALYSIS PROCEDURE: EQUIVALENT LATERAL FORCE
BASE SHEAR PER 24X40 MODULE: WOOD FLOOR, LL ≤ 100, BASE SHEAR= 20.04 kip
WOOD FLOOR, LL = 150, BASE SHEAR= 26.71 kip
CONC. FLOOR, LL ≤ 100, BASE SHEAR= 26.07 kip
CONC. FLOOR, LL = 150, BASE SHEAR= 36.36 kip

LAS POSITAS CHABOT

(6) 48 X 40
SN:
P-20-2314 A/B/C/D
P-20-2315 A/B/C/D
P-20-2316 A/B/C/D
P-20-2317 A/B/C/D
P-20-2318 A/B/C/D
P-20-2319 A/B/C/D

(1) 24 X 40
SN:
P-20-2320 A/B

1

PROJECT SPECIFIC BUILDING REQUIREMENTS FOR:
FIRE HAZARD SEVERITY ZONE. CBC CHAPTER 7A.

ROOF COVERING: (C.B.C. SECTION 705A)
26 GA. GALV. STEEL (NON-COMBUSTIBLE) INTERLOCKED STANDING SEAM ROOF PANELS W/ NO SPACE BETWEEN ROOF PANELS AND ROOF DECKING.
STANDING SEAM ROOF OVER ONE LAYER #15 ROOF FELT. (CBC 705A.2)

ROOF GUTTERS: (C.B.C. SECTION 705A.4)
SHALL BE SCREENED WITH A CORROSION-RESISTANT NONCOMBUSTIBLE WIRE MESH WITH 1/4" (6mm) OPENINGS OR EQUAL.

SOFFITS: (C.B.C. SECTION 707A.5)
NON COMBUSTIBLE CEMENT FIBER BOARD.
("LP SMARTSIDE" OR EQUAL)

EXTERIOR WALL FINISH: (C.B.C. SECTION 707A.3)
NON COMBUSTIBLE CEMENT FIBER SIDING.
("LP SMARTSIDE" OR EQUAL)

VERTICAL EXTERIOR WALL VENTS & SOFFIT VENTS: (C.B.C. SEC. 706A)
SCREENED WITH A CORROSION-RESISTANT NONCOMBUSTIBLE WIRE MESH WITH 1/16" (1.6mm) MIN. OPENINGS AND NOT TO EXCEED 1/8" (3.2mm).

EXTERIOR WINDOWS: (C.B.C. SECTION 708A.2.1)
METAL FRAME, TEMPERED GLASS.
OR ASSEMBLY OF FIRE RESIST OF NOT LESS THAN 20 MINUTES.

EXTERIOR DOORS: (C.B.C. SECTION 708A.3)
NON COMBUSTIBLE METAL DOORS AND FRAME.
OR ASSEMBLY OF FIRE RESIST OF NOT LESS THAN 20 MINUTES.

JUN 16 20

1. ARCHITECT OF RECORD SHALL PROVIDE FIRE ALARM DRAWINGS WITH SITE ADAPTED PROJECTS. FIRE ALARM IS NOT PART OF THIS PC.
2. THIS PC HAS BEEN STRUCTURALLY DESIGNED TO SUPPORT THE WEIGHT OF A FIRE SPRINKLER SYSTEM
3. ALLOWABLE AREA IS BASED ON 10'-0" SETBACK FROM ASSUMED LINE
4. PC DESIGNED AS A SINGLE-STORY MODULAR BUILDING
5. SEE STRUCTURAL FOR SOIL TYPES & BEARING STRENGTHS
6. WORK SHALL CONFORM TO TITLE 24 OF THE CALIFORNIA CODE OF REGULATIONS
7. THIS PC IS NOT APPROVED FOR "A" OCCUPANCY USAGE
8. EXTERIOR PROJECTIONS TO BE FIRE PROTECTED WHERE REQUIRED
9. SEE A0.5 AND ENGERY CALC M-SHEETS FOR REQUIRED ENVELOPE ASSEMBLIES & HVAC SYSTEMS
10. ALL SPECIFICATIONS BASED ON PERFORMANCE AND ABLE TO BE SUBSTITUTED BY "EQUAL" PRODUCTS PENDING APPROVAL BY D.S.A.
11. BUILDINGS TO COMPLY WITH WILDLAND URBAN INTERFACE GUIDELINES WHERE APPLICABLE
12. BUILDING AND SITE FEATURES MUST COMPLY WITH CALGREEN CODE FOR ITS SPECIFIC LOCATION WHEN ADAPTED FOR SITE-USE
13. SHOULD THIS P.C. CLASSROOM BE DESIGNED TO CONNECT TO ANOTHER P.C. CLASSROOM, INTERIOR SOUND TRANSMISSION IN THE WALL AND FLOOR-CEILING ASSEMBLY MUST MEET A MINIMUM STC OF 40 PER CALGREEN

IDENTIFICATION STAMP
DIV. OF THE STATE ARCHITECT
APP: 01-119031 INC:
REVIEWED FOR
SS ☑ FLS ☑ ACS ☑
DATE: 10/22/2020

PROFESSIONAL STAMP
REGISTERED PROFESSIONAL ENGINEER MANNY D. FRASER No. S3380 STRUCTURAL STATE OF CALIFORNIA
12/19/2017

THE PLANS, IDEAS & DESIGNS SHOWN ON THESE DRAWINGS ARE THE PROPERTY OF R&S TAVARES ASSOCIATES, INC. DEVISED SOLELY FOR THIS CONTRACT. THESE PLANS SHALL NOT BE USED, IN WHOLE OR IN PART, FOR ANY PURPOSE FOR WHICH THEY WERE NOT INTENDED WITHOUT THE EXPRESS WRITTEN CONSENT OF R&S TAVARES ASSOCIATES, INC. ©

CLIENT
CLASS LEASING LLC
1221 Harley Knox Boulevard
Perris, CA 92571

ORIGINAL PC STATE AGENCY APPROVAL
FILE NUMBER: PC-128
IDENTIFICATION STAMP
DIVISION OF THE STATE ARCHITECT
04 - 116504 INCR: 0
AC RM FLS EA SSR KER
DATE 07/19/2018

PROJECT TITLE
24' x 40' EXPANDABLE TO 120' x 40'

PRE-CHECK (PC) DOCUMENT
Code: [2016] CBC
A separate project application for construction is required.

PROJECT SPECIFIC STATE AGENCY APPROVAL

Revision Schedule

#	Description	Date
1	ADD WUI SPECIFICATION	

SHEET TITLE
COVER SHEET

PROJECT NUMBER
17016A

DRAWN BY
rMc/SC

CHECKED BY
JA/RT

DATE
2018/03/08

SHEET NO.
A0.0

SHEET OF SHEETS

ARCHITECTURAL

(6) General Architectural Sheets 1/4" = 1'-0" — GENERAL ARCHITECTURAL SHEETS	Sheet
COVER SHEET	A0.0
PROJECT OPTIONS SCHEDULE	A0.0.1
TYPICAL KEY PLAN AND SCHEDULE, GEN NOTES	A0.1
SIGNAGE AND SYMBOLS	A0.2
DSA-103 T&I CONCRETE FLOORS	A0.3
DSA-103 T&I CONCRETE FLOORS	A0.4
CALGREEN SPEC'S	A0.5
CALGREEN SHEET	A0.6
CALGREEN SHEET	A0.7

(5) Floor Plan Details 1/4" = 1'-0" — ARCHITECTURAL FLOOR PLANS		Sheet
☒ Floor Plans	☒ Floor Plan - 24'x40'	A1.0
	☐ Floor Plan - 36'x40'	A1.1
	☒ Floor Plan - 48'x40'	A1.2

(1) Arch Floor Framing Details 1/4" = 1'-0" — ARCHITECTURAL FLOOR FRAMING DETAILS							Sheet
☒ Wood Floor	1	2	3	4	5	6	A2.9
☐ Concrete Floor	7	8	9	10	11	12	A2.9

(2) Wall Schedule 1/4" = 1'-0" — ARCHITECTURAL WALL DETAILS

☒ Wood Studs	Door		ML				Window	Corner	HVAC	Top PLT	6" SEP	1-HR OPT 1	1-HR OPT 2	EXT HDR	INT HDR	Sheet
☒ Sheating	8	9	2	3	4	5	11	1	16	17	5	x	x	10A	10B	A2.1
☐ Plaster	8	9	3	4	5		11	1	16	17	5	x	x	10A	10B	A2.2
☐ 1-HR Sheating	8	9	2	3	4	5	11	1	16	17	5	-	-	10A	-	A2.5
☐ 1-HR Plaster	8	9	2	3	4	5	11	1	16	17	4	-	-	10A	-	A2.6
☐ Metal Studs																
☒ Wood Sheating	8	9	2	3	4	5	11	1	10	16	5	x	x	10A	10B	A2.3
☐ Wood Plaster	8	9	2	3	4	5	11	1	10	16	5	x	x	10A	10B	A2.4
☐ 1-HR Sheating	8	9	2	3	4	5	11	1	16	17	5	-	-	10A	-	A2.7
☐ 1-HR Plaster	8	9	2	3	4	5	11	1	16	17	5	-	-	10A	-	A2.8
☐ Additional Fire Rating Details and Notes																A3.0
☐ Single OCC. Bathroom																A3.1

(4) Ceiling Plans 1/4" = 1'-0" — ARCHITECTURAL CEILING PLANS			Sheet
Reflected Ceiling Plans:	☒ 24' x 40'	☐ 8 (2'x4') Recessed Light Fixture	A3.2
		☐ 12 (1'x8') Pendant Light w/ 4 (1'x16') Recessed Light	A3.2
	☐ 36' x 40'	☐ 12 (2'x4') Recessed Light Fixture	A3.2
		☐ 16 (1'x8') Pendant Light w/ 4 (1'x16') Recessed Light	A3.2
	☒ 48' x 40'	☐ 16 (2'x4') Recessed Light Fixture	A3.2
		☐ 18 (1'x8') Pendant Light w/ 4 (1'x16') Recessed Light	A3.2
Celing Notes			A3.2.1

(3) Ceiling Details 1/4" = 1'-0" — ARCHITECTURAL CEILING DETAILS	Wall	Joists	Access	BLK'G	Sheet
Ceiling Framing	Detail				
☒ T-GRID	SEE PLAN	SEE PLAN	SEE PLAN	SEE PLAN	A3.3
☐ Wood	1	2	5	Typ	A3.4
☐ MTL	6	7	10	11	A3.4

(7) Roof Plans 1/4" = 1'-0" — ARCHITECTURAL ROOF PLANS		Sheet
☒ Mono	☐ EPDM	A4.2.1
	☐ Standing Seam	A4.0.1
	☐ Parapet	A4.4.1
☐ Dual	☐ EPDM	A4.2.2
	☐ Standing Seam	A4.0.2

(22) Roof Details 1/4" = 1'-0" — ARCHITECTURAL ROOF DETAILS		Sheet
☒ Mono	☐ EPDM	A4.3
	☐ Standing Seam	A4.1
	☐ Parapet	A4.5
☐ Dual	☐ EPDM	A4.3
	☐ Standing Seam	A4.1

(8) Arch Building Section 1/4" = 1'-0" — ARCHITECTURAL BUILDING SECTION		Sheet
☒ Mono	☐ EPDM	A6.3
	☐ Standing Seam	A6.0
☐ Dual	☐ EPDM	A6.1
	☐ Standing Seam	A6.0.1
Section		A6.2

ARCHITECTURAL

(13) Exterior Elevations 1/4" = 1'-0" — ARCHITECTURAL EXTERIOR ELEVATIONS

Exterior Elevations:		Detail Left	Detail Right	Sheet	Detail Front	Detail Rear	Sheet
☒ 24'x40'							
	☒ Mono Slope	1	2	A5.0	1	2	A5.1
	☐ Parapet Roof - Mono Slope	3	4	A5.0	3	4	A5.1
	☐ Dual Slope	5	6	A5.0	1	2	A5.1
☐ 36'x40'							
	☐ Mono Slope	1	2	A5.0	5	6	A5.1
	☐ Parapet Roof - Mono Slope	3	4	A5.0	7	8	A5.1
	☐ Dual Slope	5	6	A5.0	5	6	A5.1
☒ 48'x40'							
	☒ Mono Slope	1	2	A5.0	9	10	A5.1
	☐ Parapet Roof - Mono Slope	3	4	A5.0	11	12	A5.1
	☐ Dual Slope	5	6	A5.0	9	10	A5.1

(14) Interior Elevations 1/4" = 1'-0" — ARCHITECTURAL INTERIOR ELEVATIONS

Interior Elevations:	Detail Left	Right	Front	Rear	Sheet
☒ 24'x40'	1	2	3	4	A5.2
☐ 36'x40'	1	2	5	6	A5.2
☒ 48'x40'	1	2	8	7	A5.2

MEP

(9) Plumbing 1/4" = 1'-0" — PLUMBING	Sheet
☐ Plumbing Details and Schedules	P1.0

(10) Mechanical 1/4" = 1'-0" — MECHANICAL

Mechanical Plans:			Sheet Ceiling Plan	Sheet Roof Plan
	☒ 24' x 40'	☐ Wall Mount	M5.1	M5.2
		☐ Roof Mount	M5.1	M5.2
	☐ 36' x 40'	☐ Wall Mount	M6.1	M6.2
		☐ Roof Mount	M6.1	M6.2
	☒ 48' x 40'	☐ Wall Mount	M7.1	M7.2
		☐ Roof Mount	M7.1	M7.2
	☐ 60' x 40'	☐ Wall Mount	A0.1	
		☐ Roof Mount		
	☐ 72' x 40'	☐ Wall Mount		
		☐ Roof Mount		
	☐ 84' x 40'	☐ Wall Mount		
		☐ Roof Mount		
	☐ 96' x 40'	☐ Wall Mount		
		☐ Roof Mount		
	☐ 108' x 40'	☐ Wall Mount		
		☐ Roof Mount		
	☐ 120' x 40'	☐ Wall Mount		
		☐ Roof Mount		

(11) Electrical 1/4" = 1'-0" — ELECTRICAL

Reflected Ceiling Plans:			Sheet	
	☒ 24' x 40'	☐ 8 (2'x4') Recessed Light Fixture		
		☐ 12 (1'x8') Pendant Light w/ 4 (1'x16') Recessed Light	E1.0	E1.1
	☐ 36' x 40'	☐ 12 (2'x4') Recessed Light Fixture		
		☐ 18 (1'x8') Pendant Light w/ 4 (1'x16') Recessed Light	E1.2	E1.3
	☒ 48' x 40'	☐ 16 (2'x4') Recessed Light Fixture		
		☐ 24 (1'x8') Pendant Light w/ 4 (1'x16') Recessed Light	E1.4	E1.5
	☐ 60' x 40'	☐ 20 (2'x4') Recessed Light Fixture		
		☐ 30 (1'x8') Pendant Light w/ 4 (1'x16') Recessed Light		
	☐ 72' x 40'	☐ 24 (2'x4') Recessed Light Fixture		
		☐ 36 (1'x8') Pendant Light w/ 4 (1'x16') Recessed Light		
	☐ 84' x 40'	☐ 28 (2'x4') Recessed Light Fixture		
		☐ 42 (1'x8') Pendant Light w/ 4 (1'x16') Recessed Light		
	☐ 96' x 40'	☐ 32 (2'x4') Recessed Light Fixture		
		☐ 48 (1'x8') Pendant Light w/ 4 (1'x16') Recessed Light		
	☐ 108' x 40'	☐ 36 (2'x4') Recessed Light Fixture		
		☐ 54 (1'x8') Pendant Light w/ 4 (1'x16') Recessed Light		
	☐ 120' x 40'	☐ 40 (2'x4') Recessed Light Fixture		
		☐ 60 (1'x8') Pendant Light w/ 4 (1'x16') Recessed Light		

(12) Fire Sprinklers Plans 1/4" = 1'-0" — FIRE SPRINKLERS PLANS		Sheet
☐ Fire Sprinklers Drawings:	☐ Floor Plans	FS-2
	☐ Details	FS-1

STRUCTURAL

(15) Foundations Plans 1/4" = 1'-0" — FOUNDATION

		Sheet
☐ Wood Foundation Plan:	☐ 24'x40' (50+15 PSF)	F1.11
	☐ 24'x40' (100 PSF)	F1.21
	☐ 24'x40' (150 PSF)	F1.31
	☐ 36'x40' (50+15 PSF)	F1.12
	☐ 36'x40' (100 PSF)	F1.22
	☐ 36'x40' (150 PSF)	F1.32
	☐ 48'x40' (50+15 PSF)	F1.13
	☐ 48'x40' (100 PSF)	F1.23
	☐ 48'x40' (150 PSF)	F1.33
☐ Concrete Foundation Plan		F2.10

(16) General Structural Sheets 1/4" = 1'-0" — GENERAL STRUCTURAL SHEETS	Sheet
STRUCTURAL GEN NOTES	S0.1

(17) Floor Framing Plans 1/4" = 1'-0" — STRUCTURAL FLOOR FRAMING PLANS

		Sheet
☐ Wood Sheathing Floor:	☐ (50+15 PSF)	S1.01
	☐ (100 PSF)	S1.02
	☐ (150 PSF)	S1.03
☐ Concrete Framing Floor:	☐ (50+15 PSF)	S1.1.1
	☐ (100 PSF)	S1.1.2
	☐ (150 PSF)	S1.1.3

(19) Floor Framing Details 1/4" = 1'-0" — STRUCTURAL FLOOR FRAMING DETAILS	Sheet
☒ Wood Framing	S1.2
☐ Concrete Framing	S1.2

(18) Roof Framing Plans 1/4" = 1'-0" — STRUCTURAL ROOF FRAMING PLANS	Sheet
☒ Mono Slope Roof Framing	S3.0.1
☐ Dual Slope Roof Framing	S3.0.2

(20) Wall Framing Details 1/4" = 1'-0" — STRUCTURAL WALL FRAMING DETAILS	Sheet
☒ Wood:	
☒ Framing Elevation	S4.1
☐ Wall Details	S4.2
☐ Metal:	
☐ Framing Elevation	S4.0
☐ Wall Details	S4.3
☒ Typ Framing:	S4.4
☒ Framing Schedule:	S4.5

(21) Building Section 1/4" = 1'-0" — STRUCTURAL BUILDING SECTION	Sheet
☒ Mono	S5.0
☐ Dual	S5.1

IDENTIFICATION STAMP
DIV. OF THE STATE ARCHITECT
APP: 01-119031 INC:
REVIEWED FOR
SS ☑ FLS ☑ ACS ☑
DATE: 10/22/2020

PROFESSIONAL STAMP

REGISTERED PROFESSIONAL ENGINEER
MANNY D. FRISCH
No. S3380
STRUCTURAL
STATE OF CALIFORNIA

12/19/2017

THE PLANS, IDEAS & DESIGNS SHOWN ON THESE DRAWINGS ARE THE PROPERTY OF R&S TAVARES ASSOCIATES, INC. DEVISED SOLELY FOR THIS CONTRACT. THESE PLANS SHALL NOT BE USED, IN WHOLE OR IN PART, FOR ANY PURPOSE FOR WHICH THEY WERE NOT INTENDED WITHOUT THE EXPRESS WRITTEN CONSENT OF R&S TAVARES ASSOCIATES, INC. ©

CLIENT

CLASS LEASING LLC
1221 Harley Knox Boulevard
Perris, CA 92571

ORIGINAL PC STATE AGENCY APPROVAL
FILE NUMBER: PC-128
IDENTIFICATION STAMP
DIVISION OF THE STATE ARCHITECT
04 - 116504 INCR: 0
AC RM FLS EA SSR KER
DATE 07/19/2018

PROJECT TITLE
24' x 40' EXPANDABLE TO 120' x 40'

PRE-CHECK (PC) DOCUMENT
Code: 2016 CBC
A separate project application for construction is required.

PROJECT SPECIFIC STATE AGENCY APPROVAL

Revision Schedule

#	Description	Date

SHEET TITLE
PROJECT OPTIONS SCHEDULE

PROJECT NUMBER 17016A

DRAWN BY rMc/SC

CHECKED BY JA/RT

DATE 2018/03/08

SHEET NO. A0.0.1

SHEET OF SHEETS

C:\Users\Andrew\Documents\17016 - Aries, 24x40 PC - MainFile - Low Seismic_Andrew.rvt

3/8/2018 2:19:38 PM

Door Schedule

Mark	Type	Width	Height	Door Material	Frame Type	Wall Thickness	Hardware
1	D1	3' - 0"	7' - 0"	18GA Hollow Metal	Knock Down	5 1/4"	HW1
2	D	3' - 0"	7' - 0"	18GA Hollow Metal	Knock Down	5 1/4"	HW2
3	D	3' - 0"	7' - 0"	Solid Core Wood Legacy	Knock Down	5 1/2"	HW3
4	D2	3' - 0"	7' - 0"	18GA Hollow Metal	Knock Down	4 7/8"	HW3
5	D2	3' - 0"	7' - 0"	18GA Hollow Metal	Knock Down	4 7/8"	HW3
6	D3	2' - 0"	7' - 0"	18GA Hollow Metal	Knock Down	4 1/8"	HW3

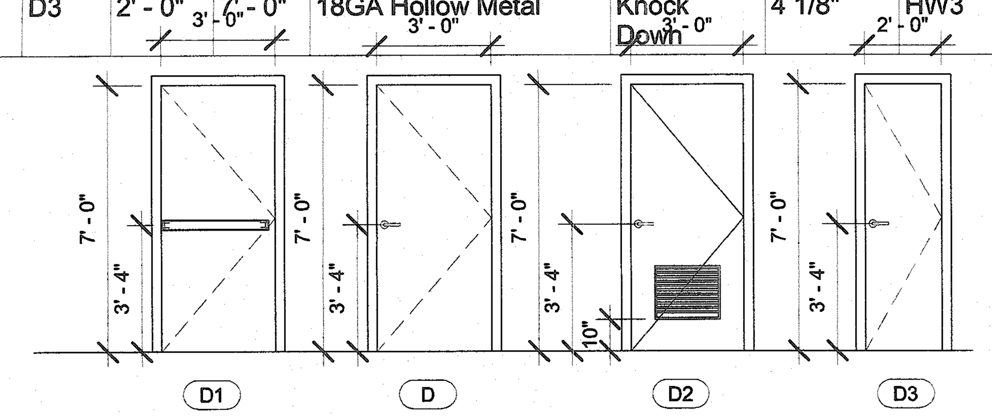

1. ALL DOORS SHALL COMPLY WITH CBC SECTION 11B-404 AND BE 1 3/4" THK (UNO)

2. CENTER ALL DOOR LEVERS FOR ACCESS AND LOCKING @ 40" ABOVE FINISH FLOOR. ALL HARDWARE SHALL OPEN FROM THE INTERIOR AND NOT REQUIRE ANY SPECIFIC KNOWLEDGE OF THE HARDWARE OR REQUIRE ANY SPECIAL EFFORT FOR EGRESS. THE LEVER OF LEVER-ACTUATED LEVERS OR LOCKS SHALL BE CURVED WITH A RETURN TO WITHIN 1/2" OF THE FACE OF THE DOOR TO PREVENT CATCHING ON THE CLOTHING (etc.) OF PERSONS DURING EGRESS. THE LEVER OF LEVER-ACTUATED LEVERS OR LOCKS SHALL EXTEND AT A MINIMUM OF ONE-HALF THE DOOR WIDTH.

3. PER CBC 1008.1.10 FOR ANY ROOM CONFIGURATION WHICH PROVIDES AN OCCUPANT LOAD OF 50 OR GREATER SHALL NOT BE PROVIDED WITH A LATCH OR LOCK UNLESS IT IS PANIC HARDWARE OR FIRE EXIT HARDWARE AND COMPLY WITH ALL REQUIREMENTS OF SECTION 11B-309 OF THE CBC. ALL HARDWARE SHALL COMPLY WITH HARDWARE SCHEDULE THIS SHEET.

4. PER CBC 11B-309.4 THE FORCE REQUIRED TO ACTIVATE OPERABLE PARTS SHALL BE 5 POUNDS (22.2 N) MAX.

5. PER CBC 11B-404.2.8.2 DOOR SPRING HINGES SHALL BE ADJUSTED SO THAT FROM THE OPEN POSITION OF 70 DEGREES, THE DOOR SHALL MOVE TO THE CLOSE POSITION IN 1.5 SECONDS MINIMUM. ALL CLOSER MUST COMPLY WITH CBC 11B-404.2.8.1 - DOOR CLOSER AND GATE CLOSERS SHALL BE ADJUSTED SO THAT FROM AN OPEN POSITION OF 90 DEGREES, THE TIME REQUIRED TO MOVE THE DOOR TO A POSITION OF 12 DEGREES FROM THE LATCH IS 5 SECONDS OR ~~LESS.~~ MINIMUM

6. THE MAXIMUM AREA OF EXTERIOR WALL OPENING PER CBC TABLE 705.8 AND THE FIRE PROTECTION FOR EXTERIOR WALL PER CBC TABLE 602. ALL FIRE PROTECTION BASED ON THE FIRE SEPARATION DISTANCE.

7. DOOR LOCATION MAY VARY BASED ON PROJECT REQUIREMENTS.

8. (PH) ON PLANS THE SHEET INDICATES REQUIRED PANIC HARDWARE.

9. PROVIDE EXIT SIGNS AS REQUIRED PER CBC SECTION 1013.4. SEE DETAILS PER A0.2

10. ALL EXIT DOORS SHALL BE OPENABLE FROM INSIDE W/O ANY USE OF SPECIAL TOOLS, KNOWLEDGE OR EFFORT.

9 ***Doors***

1. PLACE (2) PERMANENT METAL IDENTIFICATION LABELS ON EACH MODULE.
   (1) LABEL AT REAR EXTERIOR
   (1) LABEL ABOVE CEILING LINE AT INTERIOR FRAME.
   LABELS WILL BE MECHANICALLY FASTENED AND SHOW THE DSA APPLICATION NUMBER, MANUFACTURERS NAME AND SERIAL NUMBER, DESIGN LIVE LOAD FOR ROOF AND FLOOR FRAMING, WIND SPEED, EXPOSURE CATEGORY, AND Kzt = 1.0 PER 2016 CBC

2. VINYL TACKBOARD TO HAVE A CLASS 1 FLAME SPREAD RATING AND COMPLY WITH A SMOKE DENSITY OF 175

3. VERIFIED ALL DIMENSIONS PRIOR TO CONSTRUCTION

4. SEE INTERIOR ELEVATIONS FOR ALL REQUIRED EGRESS SIGNAGE AND FIRE ALARM SYSTEM COMPONENTS

5. WHEN RELOCATING OR REMOVING INTERIOR PARTITIONS (2) EXITS OR EXIT ACCESS DOORWAYS FROM ANY SPACE SHALL BE PROVIDED. EXIT DOORS MUST BE SEPERATED BY A DISTANCE APART EQUAL TO OR NOT LESS THAN ONE-HALF OF THE MAXUMUM OVERALL DIAGONAL DIMENSION FOR ALL NONSPRINKLERED BUILDINGS. EXIT DOORS MUST BE SEPERATED BY A DISTANCE APART EQUAL TO OR NOT LESS THAN ONE-THIRD OF THE MAXUMUM OVERALL DIAGONAL DIMENSION FOR ALL SPRINKLERED BUILDINGS. ALL EXIT AND EXIT ACCESS DOORWAYS MUST COMPLY WITH CBC SECTION 1015 EXIT AND EXIT ACCESS DOORWAYS AND CBC SECTION 1016 EXIT ACCESS TRAVEL DISTANCE.

6. OCCUPANCY LOAD SIGNS SHALL BE POSTING AND COMPLY WITH CBC SECTION 1004.3

7. SEE ADDITIONAL PC FOR ACCESS RAMPS AND STAIRS. WHERE RAMP IS AGAINST THE WALL AT PLASTER EXTERIOR OR ADJACENT TO ANY ABRASIVE SURFACE THEN A SMOOTH TROWEL SURFACE MUST BE PROVIDED AT THESE LOCATIONS OR AN ALTERNATIVE APPLICATION THAT COMPLIES WITH CBC SECTION 11B-505.8

8. ALL SURFACES ADJACENT TO HANDRAILS SHALL NOT HAVE ANY SHARP, ABRASIVE, OR PROTRUDING COMPONENTS

9. ALL METAL RAILINGS AND CONNECTIONS SHALL HAVE A SMOOTH SURFACE WHICH EXTENDS 8" ABOVE THE HANDRAIL

10. FOR PLASTER WALLS PROVIDE CONTROL JOINTS AT ALL MODLINES, ENDWALLS @ 2'-0 FROM EDGE, 10'-0" o/c @ SIDEWALLS, AND ABOVE AND BELOW ALL OPENING. SEE EXTERIOR ELEVATIONS. ALL MATERIALS, MEANS, METHODS, AND PROCEEDURES OF CONSTRUCTION USED TO PROTECT JOINTS SHALL COMPLY WITH FIRE RATED WALL ASSEMPLY PER CBC SECTION 703.2 - FIRE RESISTANCE RATING AND CBC SECTION 705 - EXTERIOR WALLS

11. FOR HVAC UNITS WHICH HEIGHT FROM GRADE TO BOTTOM OF UNIT EXCEEDS 27" AND LOCATED IN PEDESTRIAN PATH OF TRAVEL, A PROTECTION RAIL AROUND THE HVAC UNIT WILL BE PROVIDED. PER MNF INSTALLATION INSTRUCTIONS

2 ***A0.1 GENERAL NOTES***

MOISTURE PROTECTION INSULATION:

MATERIAL:
INSULATING MATERIAL FOR WALLS, CEILINGS, AND FLOORS SHALL BE FIBERGLASS BATTS (UNFACED) AND SHALL COMPLY WITH CBC 2016.
(CLASS A = 0-25 FLAME SPREAD:) SMOKE DEVELOPMENT DENSITY LESS THAN 450.

INSULATION VALUES
SEE TITLE 24 SHEETS FOR REQUIRED INSULATION VALUES PER CLIMATE ZONE

EXTERIOR WALL INSULATION (MIN.)
- [x] R-19 (2x6 STUD)
- [ ] R-19, CONTINUOUS R-4 (MTL STUD)

INTERIOR WALL INSULATION (MIN.)
- [x] R-13

FLOOR INSULATION (MIN.)
CONCRETE SLAB WITH R-11 FIBERGLASS INSULATION

ROOF INSULATION (MIN.)
- [ ] R-30 (EPDM)
- [x] R-30 (STANDING SEAM)

3 ***Insulation Specs***

Finish Schedule

Room Number	Flooring: Floor	Flooring: Base	Wall Finish: Front	Wall Finish: Left	Wall Finish: Rear	Wall Finish: Right	Ceiling: Type	Ceiling: Ht.	Notes
CLASSROOM	Carp.	4" TS	Tack	Tack	Tack	Tack	CP	8'-6"	
CLASSROOM w/ PH	Carp.	4" TS	Tack	Tack	Tack	Tack	CP	8'-6"	
SINGLE OCC.	SV	6" TS	FRP	FRP	FRP	FRP	CP	8'-0"	
SINGLE OCC.	SV	SC	FRP	FRP	FRP	FRP	GBP	8'-0"	

Abbreviations:

FLOORING
- CARP: COMPLYING WITH GROUP 1; TYPE "A" OR TYPE "B"; CLASS 2; DENSITY 4600; DIRECT GLUE DOWN
- SV: SHEET VINYL FLOORING
- VCT: VINYL COMPOSITION TILE

BASE
- 4" TS: 4" TOP SET BASE
- 6" TS: 6" TOP SET BASE

WALLS
- TACK: 1/2" VINYL TACKBOARD CLASS 1 OVER 1/2" GYPSUM BOARD BACKING
- FRP: 1/8" FIBER REINFORCED PANEL OVER 1/2" WATER RESISTANT GYPSUM BOARD
- GYP: 1/2" GYPSUM BOARD; TAPE; TEXTURE; PAINTED FINISH
- PLY: 1/2" PLYWOOD FINISH
- NF: NO FINISH SC: 6" SELF-COVE BASE

CEILING
- CP: ACOUSTICAL LAY IN GRID CEILING PANELS
- HC: 5/8" GYPSUM BOARD; TAPE; TEXTURE; PAINTED FINISH
- GBP: 1/2" GYPSUM BOARD WASHABLE PANELS (PAINTED)

Finishes Notes

1. ALL FINISHES SHALL COMPLY WITH CBC, TITLE 19, AND C.F.C

2. PER ASTM D2047 ALL FLOORING WITH A COEFFICIENT OF FRICTION OF A MINIMUM OF 0.6 WILL BE CONSIDERED TO OBTAIN THE INTENT OF A SLIP RESISTANCE SURFACE.

3. FLOORING CONTRACTOR IS RESPONSIBLE FOR SUB-FLOORING PREPARATION. ALL PLYWOOD TO BE APA RATED AND COMPLY WITH PS1-09. PLYWOOD SURFACE TO BE CARPETED IS TO BE PLUGGED AND SANDED BY FLOORING CONTRACTOR. ALL DEFORMITIES OCCURRING DUE TO STANDARD CONSTRUCTION PRACTICES SHALL BE PLUGGED AND SANDED BY FLOOR CONTRACTOR. MATELINE JOINTS TO BE A MAX OF 1/8" AND SHALL BE PLUGGED AND SANDED BY FLOORING CONTRACTORS.

4. ALL CARPET AND FLOOR FINISH MUST COMPLY PER CBC SECTION 11B-302 FLOOR AND GROUND SURFACES. ALL CHANGES IN ELEVATION SHALL COMPLY WITH CBC SECTION 11B-303 CHANGES IN LEVELS

5 ***Finishes and Materials***

HARDWARE SCHEDULE

CHILD RESTROOM : — **EXTERIOR DOOR HW-1**

LOCKSET	SCHLAGE ND75PDRHO626 (cylindrical)	Finish 26D or equal
BUTTS	HAGER BB1191 4 1/2" x 4 1/2" NRP	Finish 26D or equal
WEATHER STRIP	HAGER 891SAV 3684	Finish Alum or equal
THRESHOLD	HAGER 413SA 36	Finish Alum or equal
DOOR BOTTOM	HAGER 783SAV 35N	Finish Alum or equal

DOOR w/ PANIC HARDWARE: — **EXTERIOR DOOR HW-2**

EXIT DEVICE	VON DUPRIN 99L-2 w/ SCHLAGE RIM (cylindrical)	Finish Alum or equal
BUTTS	HAGER BB1191 4 1/2" x 4 1/2" NRP	Finish 26D or equal
CLOSER	NORTON 8501 BFDA	Finish 689 or equal
WEATHER STRIP	HAGER 891SAV 3684	Finish Alum or equal
THRESHOLD	HAGER 413SA 36	Finish Alum or equal
DOOR BOTTOM	HAGER 783SAV 35N	Finish Alum or equal

STAFF RESTROOM: — **EXTERIOR DOOR HW-3**

LOCKSET	SCHLAGE ND75PDRHO626 (cylindrical)	Finish 26D or equal
BUTTS	HAGER BB1191 4 1/2" x 4 1/2" NRP	Finish 26D or equal
LOUVER	ANEMO 24x12	Finish 689 or equal
		Finish Bronze or equal

FOOD PREP: — **EXTERIOR DOOR HW-4**

LOCKSET	SCHLAGE ND75PDRHO626 (cylindrical)	Finish 26D or equal
BUTTS	HAGER BB1191 4 1/2" x 4 1/2" NRP	Finish 26D or equal

ELECT ROOM: — **EXTERIOR DOOR HW-5**

LOCKSET	SCHLAGE ND75PDRHO626 (cylindrical)	Finish 26D or equal
BUTTS	HAGER BB1191 4 1/2" x 4 1/2" NRP	Finish 26D or equal
FLUSH BOLT	TBD	Finish 26D

OFFICE: — **EXTERIOR DOOR HW-6**

LOCKSET	SCHLAGE ND75PDRHO626 (cylindrical)	Finish 26D or equal
BUTTS	HAGER BB1191 4 1/2" x 4 1/2" NRP	Finish 26D or equal

NOTE: ALL CLASSROOM DOORS SHALL BE LOCKABLE FROM INSIDE

EXTERIOR DOORS:(CBC SCTION 708.A3)NON COMBUSTABLE METAL DOORS AND FRAM. OR ASSEMBLY OF FIRE RESIST OF NOT LESS THAN 20 MINUTES.

1

7 ***Door Hardware***

Window Schedule

Mark	Type Mark	Height x Width	Function	Type Comments	Glazing	Wall Thickness
A	W1	4'-0" x 8'-0"	XOX	Clear Anodized Alum. Frame	*DP	
B	W2	4'-0" x 4'-0"	XO	Clear Anodized Alum. Frame	*DP	

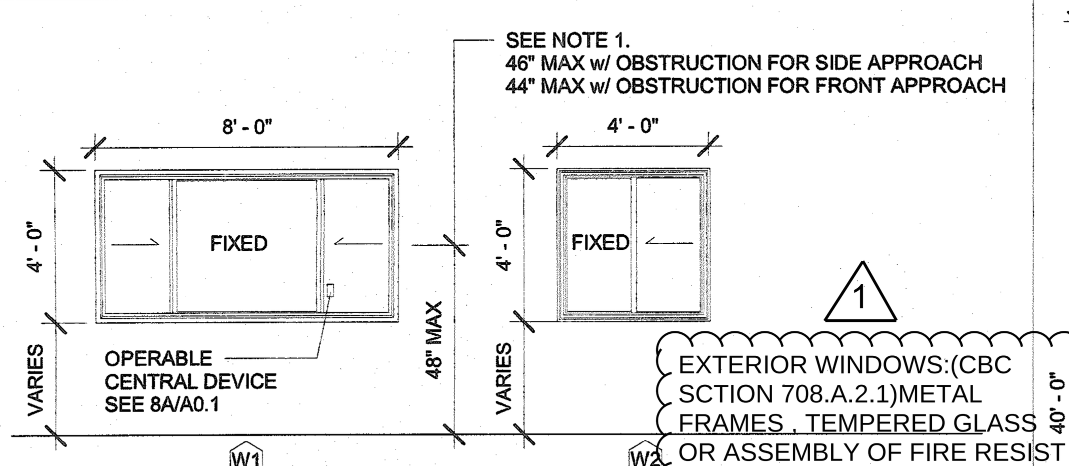

1

EXTERIOR WINDOWS:(CBC SCTION 708.A.2.1)METAL FRAMES , TEMPERED GLASS OR ASSEMBLY OF FIRE RESIST OF NOT LESS THAN 20 MINUTES.

WINDOW LOCATION MAY VARY BASED ON PROJECT REQUIREMENTS.

WINDOW - 3/4" INSULATING GLASS UNIT PERFORMANCE
U-VALUE : 0.35
SHGC : 0.24
VT : 0.5

ABBREVIATIONS:
DP - DUAL PANE
T - TEMPERED GLASS

NEW BUILDINGS THAT ARE INCLUDED IN PUBLIC SCHOOLS (KINDERGARTEN THROUGH 12TH GRADE) SHALL INCLUDE LOCKS THAT ALLOW DOORS TO CLASSROOMS AND ANY ROOM WITH AN OCCUPANCY OF FIVE OR MORE PERSONS TO BE LOCKED FROM THE INSIDE. THE LOCKS SHALL CONFORM TO THE SPECIFICATION AND REQUIREMENTS FOUND IN SECTION 1010.1.9 Education Code 17075.50,

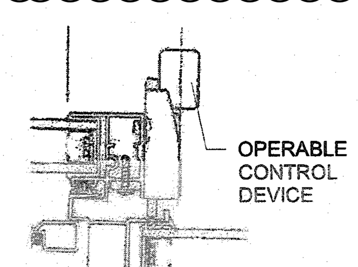

8 ***Windows*** **8A**

EMERGENCY EXIT AND PANIC HARDWARE: INDICATE ON DRAWINGS AND SPECIFICATIONS COMPLIANCE WITH SFM STANDARD 12-10-3,SECTION 12-10-302. (a) THE CROSS BAR SHALL EXTEND ACROSS NOT LESS THAN ONE-HALF THE WIDTH OF THE DOOR/GATE. (d) THE ENDS OF THE CROS-BAR SHALL BE CURVED, GUARDED OR OTHERWISE DESIGNED TO PREVENT CATCHING ON THE CLOTHING OF PERSONS DURING EGRESS. **PROVIDE CUT-SHEETS OF PANIC HARDWARE** PROVIDE THE ASSEMBLY DESIGN NUMBER FOR ALL FIRE-RATED CONSTRUCTION COMPONENTS. INSTALLATION DETAILS MUST BE COORDINATED WITH THE DESIGN NUMBERS. CUSTOM DESIGNS WHICH COMBINE COMPONENTS FROM VARIOUS DESIGNS BUT HAVE NOT BEEN TESTED AS A LISTED ASSEMBLY WILL NOT BE ACCEPTABLE.

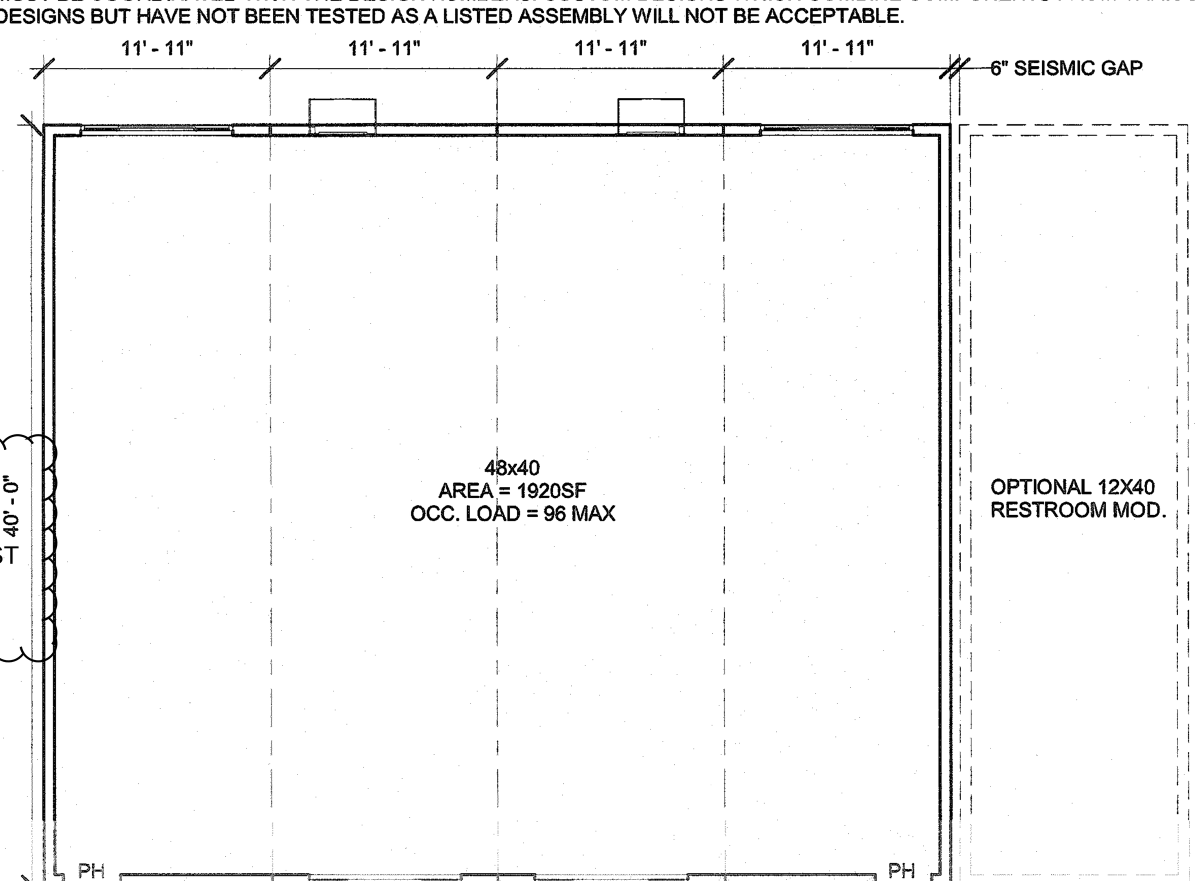

INTERIOR PARTITION MAY BE ADDED AND LOCATION MAY VARY BASED ON PROJECT REQUIREMENTS. SEE GENERAL NOTES THIS SHEET.
ALL PARTITION ADDED TO BE SUBMITTED FOR APPROVAL WITH SITE SPECIFIC STATE AGENCY APPROVAL.

ABBREVIATIONS:
PH - SEE HARDWARE SCHEDULE ABOVE - NO.2

6 ***48x40 (Total Area 1920sf)***

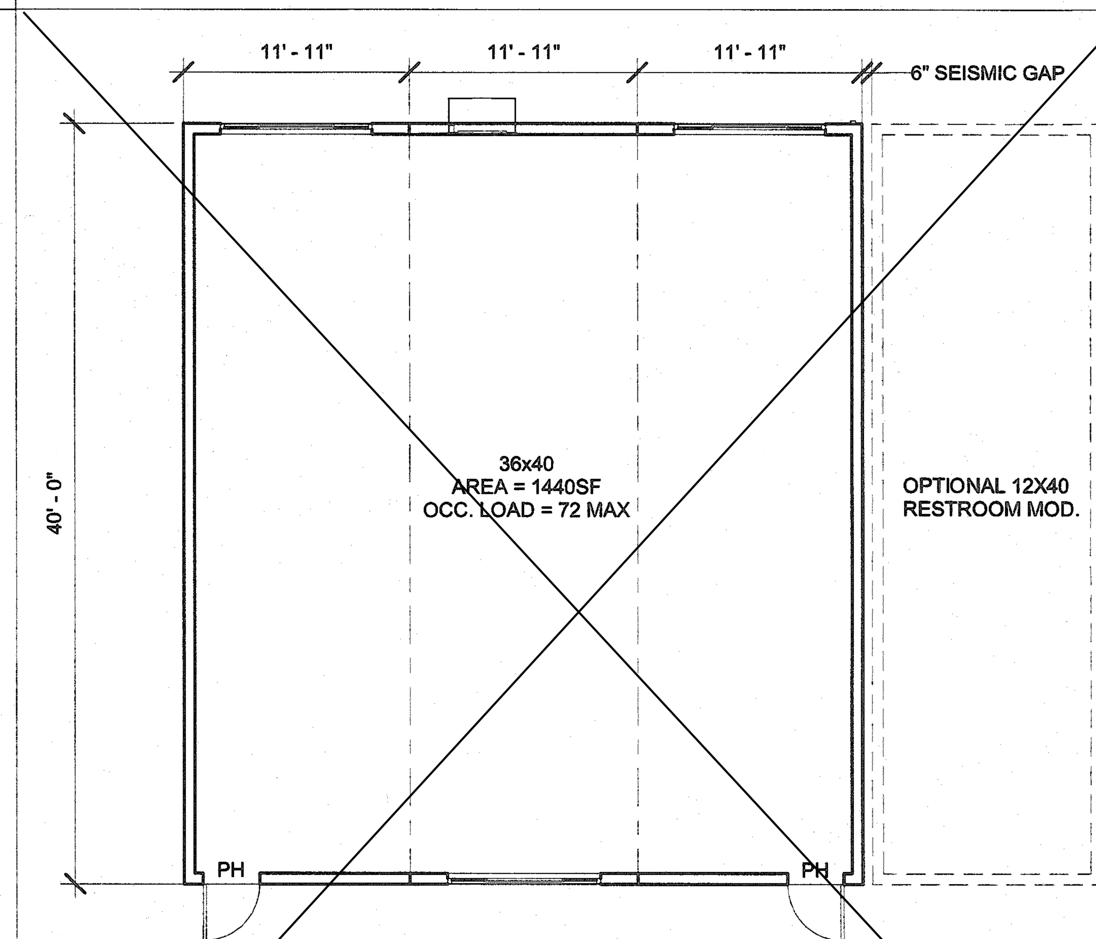

INTERIOR PARTITION MAY BE ADDED AND LOCATION MAY VARY BASED ON PROJECT REQUIREMENTS. SEE GENERAL NOTES THIS SHEET
ALL PARTITION ADDED TO BE SUBMITTED FOR APPROVAL WITH SITE SPECIFIC STATE AGENCY APPROVAL

ABBREVIATIONS:
PH - SEE HARDWARE SCHEDULE ABOVE - NO.2

4 ***36x40 (Total Area 1440sf)***

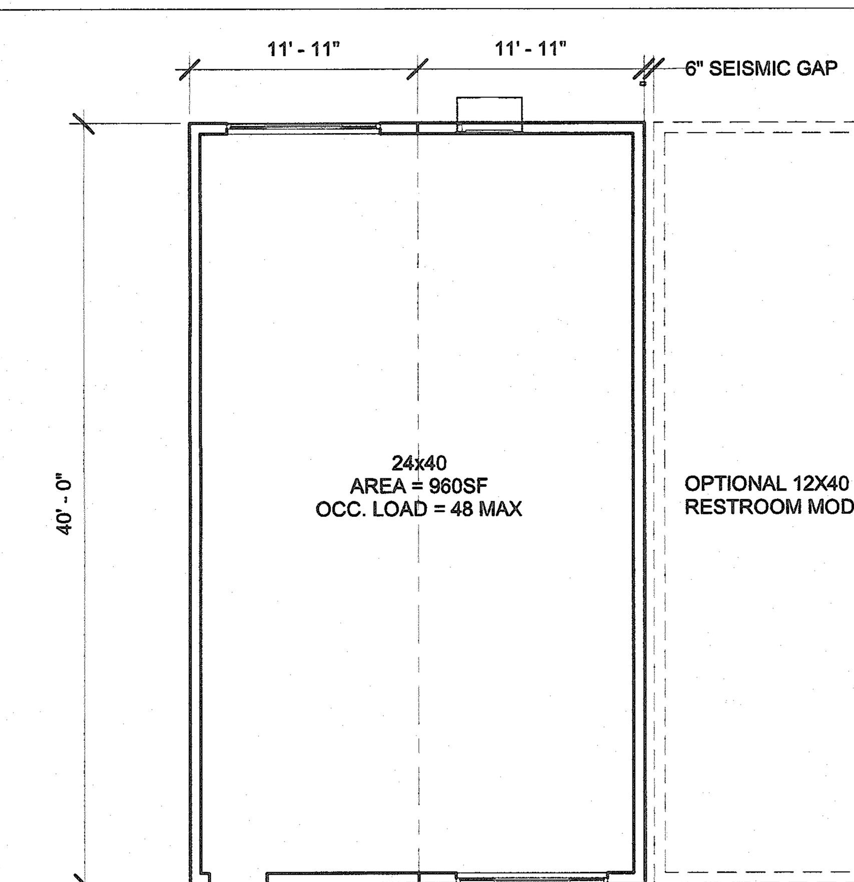

INTERIOR PARTITION MAY BE ADDED AND LOCATION MAY VARY BASED ON PROJECT REQUIREMENTS. SEE GENERAL NOTES THIS SHEET.
ALL PARTITION ADDED TO BE SUBMITTED FOR APPROVAL WITH SITE SPECIFIC STATE AGENCY APPROVAL.

ABBREVIATIONS:
PH - SEE HARDWARE SCHEDULE ABOVE - NO.2

1 ***24x40 (Total Area 960sf)***

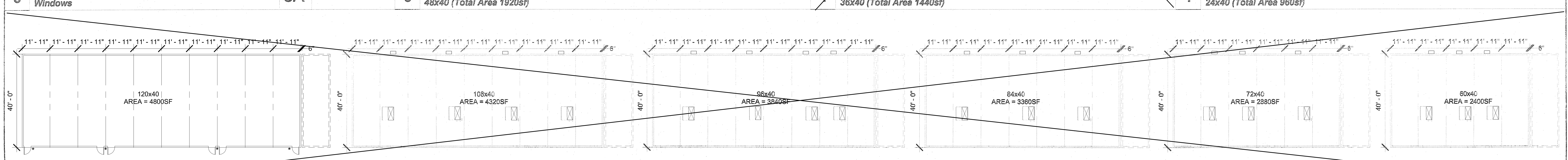

(4) OUTDOOR LIGHTING

15 ***120x40 (Total Area 4800sf)*** **14** ***108x40 (Total Area 4320sf)*** **13** ***96x40 (Total Area 3840sf)*** **12** ***84x40 (Total Area 3360sf)*** **11** ***72x40 (Total Area 2880sf)*** **10** ***60x40 (Total Area 2400sf)***

IDENTIFICATION STAMP
DIV. OF THE STATE ARCHITECT
APP: 01-119031 INC:
REVIEWED FOR
SS ☑ FLS ☑ ACS ☑
DATE: 10/22/2020

PROFESSIONAL STAMP
REGISTERED PROFESSIONAL ENGINEER MANNY D. FRASHER No. S3380 STRUCTURAL STATE OF CALIFORNIA
12/19/2017

THE PLANS, IDEAS & DESIGNS SHOWN ON THESE DRAWINGS ARE THE PROPERTY OF R&S TAVARES ASSOCIATES, INC. DEVISED SOLELY FOR THIS CONTRACT. THESE PLANS SHALL NOT BE USED, IN WHOLE OR IN PART, FOR ANY PURPOSE FOR WHICH THEY WERE NOT INTENDED WITHOUT THE EXPRESS WRITTEN CONSENT OF R&S TAVARES ASSOCIATES, INC. ©

CLIENT
CLASS LEASING LLC
1221 Harley Knox Boulevard
Perris, CA 92571

ORIGINAL PC STATE AGENCY APPROVAL
FILE NUMBER: PC-128
IDENTIFICATION STAMP
DIVISION OF THE STATE ARCHITECT
04 - 116504 INCR: 0
AC RM FLS EA SSR KER
DATE 07/19/2018

PROJECT TITLE
24' x 40' EXPANDABLE TO 120' x 40'

PRE-CHECK (PC) DOCUMENT
Code: [2016] CBC
A separate project application for construction is required.

PROJECT SPECIFIC STATE AGENCY APPROVAL

Revision Schedule

#	Description	Date

SHEET TITLE
TYPICAL KEY PLAN AND SCHEDULES, GEN NOTES,

PROJECT NUMBER 17016A
DRAWN BY rMc/SC
CHECKED BY JA/RT
DATE 2017/06/05
SHEET NO. A0.1

12/19/2017 1:11:55 PM C:\Users\Lee\Documents\17016 - Aries, 24x40 PC - MainFile - Low Seismic_Lee.rvt

~~Advisory 1008.4.2 Clear Floor or Ground Space. Clear floor or ground spaces, turning spaces, and accessible routes are permitted to overlap within play areas. A specific location has not been designated for the clear floor or ground spaces or turning spaces, except swings, because each play component may require that the spaces be placed in a unique location. Where play components include a seat or entry point, designs that provide for an unobstructed transfer from a wheelchair or other mobility device are recommended. This will enhance the ability of children with disabilities to independently use the play component.~~

~~When designing play components with manipulative or interactive features, consider appropriate reach ranges for children seated in wheelchairs. The following table provides guidance on reach ranges for children seated in wheelchairs. These dimensions apply to either forward or side reaches. The reach ranges are appropriate for use with those play components that children seated in wheelchairs may access and reach. Where transfer systems provide access to elevated play components, the reach ranges are not appropriate.~~

~~Children's Reach Ranges~~

Forward or Side Reach	High (maximum)	Low (minimum)
Ages 3 and 4	36 in (915 mm)	20 in (510 mm)
Ages 5 through 8	40 in (1015 mm)	18 in (455 mm)
Ages 9 through 12	44 in (1120 mm)	16 in (405 mm)

CHAPTER 7: COMMUNICATION ELEMENTS AND FEATURES

702 Fire Alarm Systems
702.1 General. Fire alarm systems shall have permanently installed audible and visible alarms complying with NFPA 72 (2016 edition)
except that the maximum allowable sound level of audible notification appliances complying with section 4-3.2.1 of NFPA 72 (1999 edition) shall have a sound level no more than 110 dB at the minimum hearing distance from the audible appliance. In addition, alarms in guest rooms required to provide communication features shall comply with sections 4-3 and 4-4 of NFPA 72 (2016 edition)

703 Signs

703.1 General. Signs shall comply with 703. Where both visual and tactile characters are required, either one sign with both visual and tactile characters, or two separate signs, one with visual, and one with tactile characters, shall be provided.

703.2 Raised Characters. Raised characters shall comply with 703.2 and shall be duplicated in braille complying with 703.3. Raised characters shall be installed in accordance with 703.4.

703.2.1 Depth. Raised characters shall be 1/32 inch (0.8 mm) minimum above their background.

703.2.2 Case. Characters shall be uppercase.

703.2.3 Style. Characters shall be sans serif. Characters shall not be italic, oblique, script, highly decorative, or of other unusual forms.

703.2.4 Character Proportions. Characters shall be selected from fonts where the width of the uppercase letter "O" is 60 percent minimum and 110 percent maximum of the height of the uppercase letter "I".

703.2.5 Character Height. Character height measured vertically from the baseline of the character shall be 5/8 inch (16 mm) minimum and 2 inches (51 mm) maximum based on the height of the uppercase letter "I".

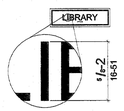

Figure 703.2.5 Height of Raised Characters

TABLE 11B-703.3.1
BRAILLE DIMENSIONS

MEASUREMENT RANGE	MINIMUM IN INCHES MAXIMUM IN INCHES
Dot base diameter	0.059 (1.5 mm) to 0.063 (1.6 mm)
Distance between two dots in the same cell[1]	0.100 (2.5 mm)
Distance between corresponding dots in adjacent cells[1]	0.300 (7.6 mm)
Dot height	0.025 (0.6 mm) to 0.037 (0.9 mm)
Distance between corresponding dots from one cell directly below[1]	0.395 (10 mm) to 0.400 (10.2 mm)

1. Measured center to center.

703.2.6 Stroke Thickness. Stroke thickness of the uppercase letter "I" shall be 15 percent maximum of the height of the character.

703.2.7 Character Spacing. Character spacing shall be measured between the two closest points of adjacent raised characters within a message, excluding word spaces. Where characters have rectangular cross sections, spacing between individual raised characters shall be 1/8 inch (3.2 mm) minimum and 4 times the raised character stroke width maximum. Where characters have other cross sections, spacing between individual raised characters shall be 1/16 inch (1.6 mm) minimum and 4 times the raised character stroke width maximum at the base of the cross sections, and 1/8 inch (3.2 mm) minimum and 4 times the raised character stroke width maximum at the top of the cross sections. Characters shall be separated from raised borders and decorative elements 3/8 inch (9.5 mm) minimum.

703.2.8 Line Spacing. Spacing between the baselines of separate lines of raised characters within a message shall be 135 percent minimum and 170 percent maximum of the raised character height.

703.3 Braille. Braille shall be contracted (Grade 2) and shall comply with 703.3 and 703.4.

703.3.1 Dimensions and Capitalization. Braille dots shall have a domed or rounded shape and shall comply with Table 703.3.1. The indication of an uppercase letter or letters shall only be used before the first word of sentences, proper nouns and names, individual letters of the alphabet, initials, and acronyms.

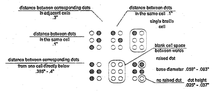

Figure 703.3.1 Braille Measurement

703.3.2 Position. Braille shall be positioned below the corresponding text. If text is multi-lined, braille shall be placed below the entire text. Braille shall be separated 3/8 inch (9.5 mm) minimum from any other tactile characters and 3/8 inch (9.5 mm) minimum from raised borders and decorative elements.

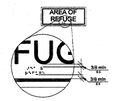

Figure 703.3.2 Position of Braille

703.4 Installation Height and Location. Signs with tactile characters shall comply with 703.4.

703.4.1 Height Above Finish Floor or Ground. Tactile characters on signs shall be located 48 inches (1220 mm) minimum above the finish floor or ground surface, measured from the baseline of the lowest tactile character and 60 inches (1525 mm) maximum above the finish floor or ground surface, measured from the baseline of the highest tactile character.

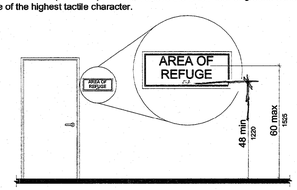

Figure 703.4.1 Height of Tactile Characters Above Finish Floor or Ground

703.4.2 Location. Where a tactile sign is provided at a door, the sign shall be located alongside the door at the latch side. Where a tactile sign is provided at double doors with one active leaf, the sign shall be located on the inactive leaf. Where a tactile sign is provided at double doors with two active leafs, the sign shall be located to the right of the right hand door. Where there is no wall space at the latch side of a single door or at the right side of double doors, signs shall be located on the nearest adjacent wall. Signs containing tactile characters shall be located so that a clear floor space of 18 inches (455 mm) minimum by 18 inches (455 mm) minimum, centered on the tactile characters, is provided beyond the arc of any door swing between the closed position and 45 degree open position.

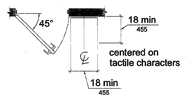

Figure 703.4.2 Location of Tactile Signs at Doors

703.5 Visual Characters. Visual characters shall comply with 703.5.

703.5.1 Finish and Contrast. Characters and their background shall have a non-glare finish. Characters shall contrast with their background with either light characters on a dark background or dark characters on a light background.

703.5.2 Case. Characters shall be uppercase or lowercase or a combination of both.

703.5.3 Style. Characters shall be conventional in form. Characters shall not be italic, oblique, script, highly decorative, or of other unusual forms.

703.5.4 Character Proportions. Characters shall be selected from fonts where the width of the uppercase letter "O" is 60 percent minimum and 110 percent maximum of the height of the uppercase letter "I".

703.5.5 Character Height. Minimum character height shall comply with Table 703.5.5. Viewing distance shall be measured as the horizontal distance between the character and an obstruction preventing further approach towards the sign. Character height shall be based on the uppercase letter "I".

703.5.6 Height From Finish Floor or Ground. Visual characters shall be 40 inches (1015 mm) minimum above the finish floor or ground.

703.5.7 Stroke Thickness. Stroke thickness of the uppercase letter "I" shall be 10 percent minimum and 30 percent maximum of the height of the character.

703.5.8 Character Spacing. Character spacing shall be measured between the two closest points of adjacent characters, excluding word spaces. Spacing between individual characters shall be 10 percent minimum and 35 percent maximum of character height.

703.5.9 Line Spacing. Spacing between the baselines of separate lines of characters within a message shall be 135 percent minimum and 170 percent maximum of the character height.

703.6 Pictograms. Pictograms shall comply with 703.6.

703.6.1 Pictogram Field. Pictograms shall have a field height of 6 inches (150 mm) minimum. Characters and braille shall not be located in the pictogram field.

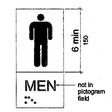

Figure 703.6.1 Pictogram Field
dark-on-light.

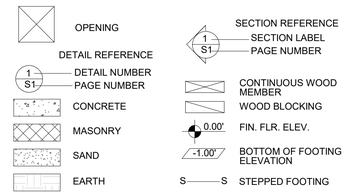

REQUIRED PER 11B-219 & 11B-706
(SEE FLOOR PLANS FOR MORE INFO)

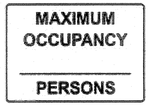

OCCUPANT LOAD SIGN REQUIRED PER DSA BU11-08.

EVERY ROOM OR SPACE WHICH IS USED FOR ASSEMBLY, CLASSROOM, DINING OR SIMILAR PURPOSES HAVING AN OCCUPANT LOAD OF 50 OR MORE SHALL HAVE THE OCCUPANT LOAD OF THE ROOM OR SPACE POSTED IN A CONSPICUOUS PLACE, NEAR THE MAIN EXIT OR EXIT ACCESS DOORWAY

5 1/4" = 1'-0"
Sign Notes

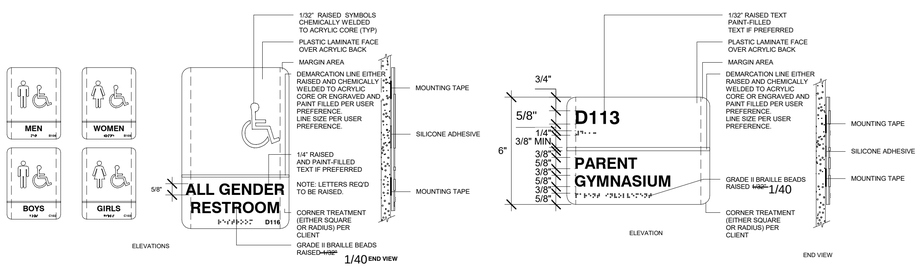

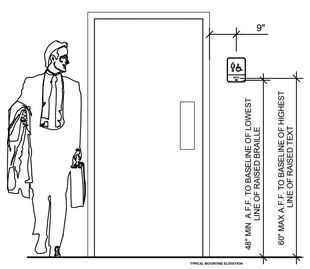

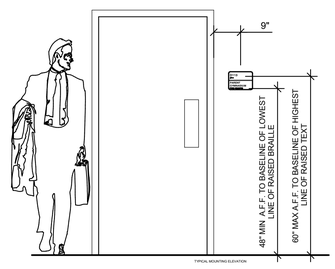

4 1/2" = 1'-0"
Signage

REFERENCE ARCHITECT SHEET A1.11s FOR SIGNAGE

ROOM WALL SIGN

RESTROOM WALL SIGN

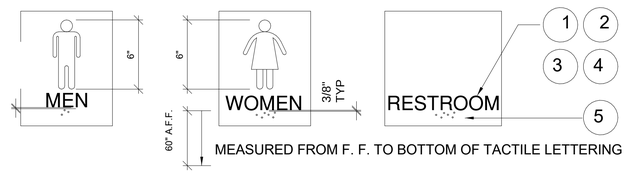

MEASURED FROM F. F. TO BOTTOM OF TACTILE LETTERING

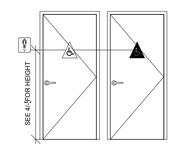

1/4"=1'-0"

DOOR SYMBOLS: CIRLCLE & TRIANGLE1/4" THICK. 1/4" THICK TRIANGLE SHALL BE SUPERIMPOSED OVER 1/4" THICK CIRCLE AT UNISEX AND GENDER NEUTRAL RR.

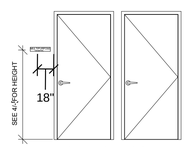

NOTE: TACTILE SIGN TEXT SHALL BE CENTERED 18" CLEAR FROM STRIKE OF DOOR

RESTROOM DOOR SIGN

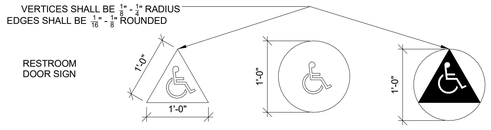

1. CHARACTERS ON SIGNS SHALL BE RAISED 1/32 INCH MIN. AND SHALL BE SANS SERIF UPPERCASE CHARACTERS ACCOMPANIED BY GRADE 2.
2. RAISED CHARACTERS SHALL BE A MINIMUM OF 5/8 INCH AND A MAXIMUM OF 2 INCHES HIGH.
3. CONTRAST BETWEEN CHARACTERS, SYMBOLS AND THEIR BACKGROUND MUST BE 70% MINIMUM AND HAVE A NON-GLARE FINISH. 11B-703-5.1.
4. TRIANGLE OR CIRCLE SMALL CONTRAST WITH DOOR. EITHER LIGHT ON A DARK BACKGROUND OR DARK ON A LIGHT BACKGROUND. 11B-703.7:2.6.1 AND 11B-703.2.2.6.2
5. CHARACTERES ON SIGN SHALL HAVE A WIDTH-TO HEIGHT RATIO OF BETWEEN 3:5 AND 1.1:1 AND A STROKE WIDTH TO HEIGHT RATIO OF BETWEEN 1:5 AND 1:10. SEE 11B.703.2.4

IDENTIFICATION STAMP
DIV. OF THE STATE ARCHITECT
APP: 01-119031 INC:
REVIEWED FOR
SS ☑ FLS ☑ ACS ☑
DATE: 10/22/2020

PROFESSIONAL STAMP

REGISTERED PROFESSIONAL ENGINEER
MANNY D. FRANCO
No. S6380
STRUCTURAL
STATE OF CALIFORNIA

12/19/2017

THE PLANS, IDEAS & DESIGNS SHOWN ON THESE DRAWINGS ARE THE PROPERTY OF R&S TAVARES ASSOCIATES, INC. DEVISED SOLELY FOR THIS CONTRACT. THESE PLANS SHALL NOT BE USED, IN WHOLE OR IN PART, FOR ANY PURPOSE FOR WHICH THEY WERE NOT INTENDED WITHOUT THE EXPRESS WRITTEN CONSENT OF R&S TAVARES ASSOCIATES, INC. ©

CLIENT
CLASS LEASING LLC
1221 Harley Knox Boulevard
Perris, CA 92571

ORIGINAL PC STATE AGENCY APPROVAL
FILE NUMBER: PC-128
IDENTIFICATION STAMP
DIVISION OF THE STATE ARCHITECT
04 - 116504 INCR: 0
AC RM FLS EA SSR KER
DATE 07/19/2018

PROJECT TITLE
24' x 40'
EXPANDABLE TO
120' x 40'

PRE-CHECK (PC) DOCUMENT
Code: [2016] CBC
A separate project application for construction is required.

PROJECT SPECIFIC STATE AGENCY APPROVAL

Revision Schedule

#	Description	Date

SHEET TITLE
SIGNAGE AND SYMBOLS

PROJECT NUMBER
17016A

DRAWN BY
rMc/SC

CHECKED BY
JA/RT

DATE
2017/06/05

SHEET NO.
A0.2

SHEET OF SHEETS

12/19/2017 1:11:57 PM C:\Users\Lee\Documents\17016 - Aries, 24x40 PC - MainFile - Low Seismic_Lee.rvt

12/18/2017 3:36:33 PM C:\Users\Sarah\Documents\17016 - Aries, 24x40 PC - MainFile - Low Seismic_Sarah.rvt

DSA DIVISION OF THE STATE ARCHITECT – DEPARTMENT OF GENERAL SERVICES

DSA-103 Issued 12/30/2016

List of Required Structural Tests & Special Inspections - 2016 CBC

INCREMENT # # | DSA File No.: # | Application No.: # | Date Submitted: # | Revised: # | Revised: #

School Name | District

IMPORTANT: This form is only a summary list of structural tests and some of the special inspections required for the project. Generally, the structural tests and special inspections noted on this form are those that will be performed by the Geotechnical Engineer of Record, Laboratory of Record, or Special Inspector. The actual complete test and inspection program must be performed as detailed on the DSA approved documents. The appendix at the bottom of this form identifies work NOT subject to DSA requirements for special inspection or structural testing. The project inspector is responsible for providing inspection of all facets of construction, including but not limited to, special inspections not listed on this form such as structural wood framing, high-load wood diaphragms, cold-formed steel framing, anchorage of non-structural components, etc., per Title 24, Part 2, Chapter 17A.

NOTE: This form is also available for projects submitted for review under the 2007, 2010, and 2013 CBC.

INSTRUCTIONS: Click a plus sign (+) before any category or subcategory to reveal additional tests and special inspections. A shaded box indicates a test or special inspection that may be required, depending on the scope of the construction and other issues. A shaded box can be clicked indicating your selection of that test. **Note:** A minus (-) on a category or subcategory heading indicates that it can be collapsed. However, any selections you may have made will be cleared. Click on the "COMPILE" button to show only the tests and inspections finally selected. **For more information on use of this form, see DSA-103.INSTR.**

Note: References are to the 2016 edition of the California Building Code (CBC) unless otherwise noted.

REQUIRED	TEST OR SPECIAL INSPECTION	TYPE [1]	PERFORMED BY [2]	CODE REFERENCE AND NOTES
+	**SOILS**			
+	**CONCRETE**			Table 1705A.3, ACI 318-14 Sections 26.12 & 26.13
+	**MASONRY**			TMS 402-13/ACI 530-13/ASCE 5-13 Table 3.1.3 & TMS 602-13/ACI 530.1-13/ASCE 6-13 Table 5
-	**STEEL, ALUMINUM**			Table 1705A.2.1, AISC 303-10, AISC 360-10, AISC 341-10, AISC 358-10, AISI S100-07/S2-10
-	**17. STRUCTURAL STEEL, COLD-FORMED STEEL, AND ALUMINUM USED FOR STRUCTURAL PURPOSES**			
	Material Verification:			
X	a. Verify identification of all materials and: • Mill certificates indicate material properties that comply with requirements, • Material sizes, types and grades comply with requirements.	Periodic	*	2203A.1 (2203.1+), Table 1705A.2.1 Item 3a-3c; AISI S100-07/S2-10 Section A2.1 & A2.2, AISI S200-12 Section A3, AISI S220-11 Section A4. * By special inspector or qualified technician when performed off-site.
X	b. Test unidentified materials	Test	LOR	2203A.1 (2203.1+).
	c. Examine seam welds of HSS shapes	Periodic	SI	DSA IR 17-3.
	Inspection:			
	d. Not used.			
X	e. Verify and document steel fabrication per DSA approved construction documents.	Periodic	SI	Not applicable to cold-formed steel light-frame construction, except for trusses (1705A.2.4).
+	**18. HIGH STRENGTH BOLTS:**	RCSC 2009		
-	**19. WELDING:**			1705A.2.5, Table 1705A.2.1 Items 4 & 5; DSA IR 17-3, AWS D1.1 and AWS D1.8 for structurel steel, AWS D1.2 for Aluminum, AWS D1.3 for cold-formed steel, AWS D1.4 for reinforcing steel. (See Appendix for exemptions.)
	Verification of Materials, Equipment, Welders, etc:			
X	a. Verify weld filler material identification markings per AWS designation listed on the DSA approved documents and the WPS.	Periodic	SI	DSA IR 17-3.
X	b. Verify weld filler material manufacturer's certificate of compliance.	Periodic	SI	DSA IR 17-3.
X	c. Verify WPS, welder qualifications and equipment.	Periodic	SI	DSA IR 17-3.
-	**19.1 SHOP WELDING:**			
X	a. Inspect groove welds, multi-pass fillet welds, single pass fillet welds > 5/16", plug and slot welds	Continuous	SI	Table 1705A.2.1 Item 5a1-4. Per AISC 360-10 (and AISC 341-10 as applicable). DSA IR 17-3.
X	b. Inspect single-pass fillet welds ≤ 5/16", floor and roof deck welds	Periodic	SI	1705A.2.2, Table 1705A.2.1 Item 5a.5 & 5a.6. Per AISC 360-10 (and AISC 341-10 as applicable). DSA IR 17-3.
X	c. Inspect welding of stairs and railing systems.	Periodic	SI	1705A.2.1. Per AISC 360-10 (and AISC 341-10 as applicable). AWS D1.1 & D1.3. DSA IR 17-3.
	d. Verification of reinforcing steel weldability other than ASTM A706	Periodic	SI	1705A.3.1; verify carbon equivalent reported on mill certificates. AWS D1.4. DSA IR 17-3.
	e. Inspect welding of reinforcing steel.	Continuous	SI	1705A.3.1, Table 1705A.3 Item 2, and Table 1705A.2.1 Item 5b, 1903A.8. AWS D1.4. DSA IR 17-3.
+	**19.2 FIELD WELDING:**			
-	**20. NONDESTRUCTIVE TESTING:**			
X	a. Ultrasonic	Test	LOR	1705A.2.1 & 1705A.2.5. AISC 360-10 N5.5, AISC 341-10 App. Q 5.2. AWS D1.1, D1.8. ANSI/ASNT CP-189, SNT-TC-1A. DSA IR 17-2.
X	b. Magnetic Particle	Test	LOR	
	c.	Test	LOR	
	d.	Test	LOR	
+	**21. STEEL JOISTS AND TRUSSES:**			
+	**22. SPRAY APPLIED FIRE-PROOFING:**			
-	**23. ANCHOR BOLTS, ANCHOR RODS, & OTHER STEEL:**			
	a. Anchor Bolts and Anchor Rods	Test	LOR	IR 17-11 Sample and test anchor bolts and anchor rods not reedily identifiable.
	b. Threaded rod not used for foundation anchorage.	Test	LOR	Sample and test threaded rods not readily identifiable per procedures noted in IR 17-11
	c.			
+	**WOOD**			
+	**OTHER**			

THE EXAMPLE OF FORM DSA-103s SHOWN ON THIS SHEET ARE FOR ILLUSTRATION PURPOSE ONLY. A FORM DSA-103 IS TO BE COMPLETED FOR EACH APPLICATION THAT THIS PC IS BEING INCORPORATED INTO AND ALL EXAMPLE FORM DSA-103s ARE TO BE CROSSED OUT ON THIS DRAWING.

3 6" = 1'-0" ***DSA-103 PLYWOOD FLOOR (Stockpile)1***

DSA DIVISION OF THE STATE ARCHITECT – DEPARTMENT OF GENERAL SERVICES

DSA-103 Issued 12/30/2016

List of Required Structural Tests & Special Inspections - 2016 CBC

INCREMENT # # | DSA File No.: # | Application No.: # | Date Submitted: # | Revised: # | Revised: #

School Name | District

IMPORTANT: This form is only a summary list of structural tests and some of the special inspections required for the project. Generally, the structural tests and special inspections noted on this form are those that will be performed by the Geotechnical Engineer of Record, Laboratory of Record, or Special Inspector. The actual complete test and inspection program must be performed as detailed on the DSA approved documents. The appendix at the bottom of this form identifies work NOT subject to DSA requirements for special inspection or structural testing. The project inspector is responsible for providing inspection of all facets of construction, including but not limited to, special inspections not listed on this form such as structural wood framing, high-load wood diaphragms, cold-formed steel framing, anchorage of non-structural components, etc., per Title 24, Part 2, Chapter 17A.

NOTE: This form is also available for projects submitted for review under the 2007, 2010, and 2013 CBC.

INSTRUCTIONS: Click a plus sign (+) before any category or subcategory to reveal additional tests and special inspections. A shaded box indicates a test or special inspection that may be required, depending on the scope of the construction and other issues. A shaded box can be clicked indicating your selection of that test. **Note:** A minus (-) on a category or subcategory heading indicates that it can be collapsed. However, any selections you may have made will be cleared. Click on the "COMPILE" button to show only the tests and inspections finally selected. **For more information on use of this form, see DSA-103.INSTR.**

Note: References are to the 2016 edition of the California Building Code (CBC) unless otherwise noted.

REQUIRED	TEST OR SPECIAL INSPECTION	TYPE [1]	PERFORMED BY [2]	CODE REFERENCE AND NOTES
-	**SOILS**			
-	**1. GENERAL:**	Table 1705A.6		
X	a. Verify that: • site has been prepared properly prior to placement of controlled fill and/or excavations for foundations, • foundation excavations are extended to proper depth and have reached proper material, and • materials below footings are adequate to achieve the design bearing capacity.	Periodic	GE*	* By geotechnical engineer or his or her qualified representative. (See Appendix for exemptions.)
-	**2. COMPACTED FILLS:**	Table 1705A.6		
	a. Perform classification and testing of fill materials.	Test	LOR*	* Under the supervision of the geotechnical engineer.
X	b. Verify use of proper meterials, densities end inspect lift thicknesses, placement, and compaction during placement of fill.	Continuous	GE*	* By geotechnical engineer or his or her qualified representative.
X	c. Test compaction of fill.	Test	LOR*	* Under the supervision of the geotechnical engineer.
+	**3. DRIVEN DEEP FOUNDATIONS (PILES):**	Table 1705A.7		
+	**4. CAST-IN-PLACE DEEP FOUNDATIONS (PIERS):**			Table 1705A.8
+	**5. RETAINING WALLS:**			
+	**6. OTHER SOILS:**			
-	**CONCRETE**			Table 1705A.3, ACI 318-14 Sections 26.12 & 26.13
-	**7. CAST IN PLACE CONCRETE**			
	Material Verification and Testing:			
X	a. Verify use of required design mix.	Periodic	SI*	Table 1705A.3 Item 5, 1910A.1 (1909.2.3+). * To be performed by qualified batch-plent inspector and concrete sampling technician
	b. Identifiy, sample, and test reinforcing steel.	Test	LOR	1910A.2 (1909.2.4+); ACI 318-14 Section 26.6.1.2. DSA IR 17-10
X	c. During concrete placement, fabricate specimens for strength tests,perform slump and air content tests, and determine the temperature of the concrete.	Test	LOR	Table 1705A.3 item 6; ACI 318-14 Sections 26.5 & 26.12
X	d. Test concrete (f_c).	Test	LOR	1905A.1.16 (1909.3.7+); ACI 318-14 Section 26.12.
	Inspection:			
X	e. Batch plant inspection ● Continuous ○ Periodic	See Notes	SI	Default of 'Continuous' per 1705A.3.3; If approved by DSA, batch plant inspection may be reduced to 'Periodic' subject to requirements in Section 1705A.3.3.1 or eliminated per 1705A.3.3.2. (See Appendix for exemptions.)
	f. Not used.			
	g. Not used.			
	h. Welding of reinforcing steel.	Provide special inspection per STEEL, category 19.1(d) & (e) and/or 19.2(g) & (h) below.		
	I. Not used.			
+	**8. PRESTRESSED CONCRETE (in addition to Cast in Place Concrete tests and inspections):**			
+	**9. PRECAST CONCRETE (in addition to Cast in Place Concrete tests and inspections):**			
+	**10. SHOTCRETE (in addition to Cast in Place Concrete tests and inspections):**			
-	**11. POST-INSTALLED ANCHORS:**			
X	a. Inspect installation of post-installed anchors	See Notes	SI*	Table 1705A.3 Item 4a (Continuous) & 4b (Periodic) (see Appendix for exemptions). ACI 318-14 Sections 17.8 & 26.13 * May be performed by the project inspector when specifically approved by DSA.
X	b. Test post-installed anchors.	Test	LOR	1910A.5 (1909.2.7+). (See Appendix for exemptions.)
+	**12. OTHER CONCRETE:**			
+	**MASONRY**			TMS 402-13/ACI 530-13/ASCE 5-13 Table 3.1.3 & TMS 602-13/ACI 530.1-13/ASCE 6-13 Table 5
-	**STEEL, ALUMINUM**			Table 1705A.2.1, AISC 303-10, AISC 360-10, AISC 341-10, AISC 358-10, AISI S100-07/S2-10
-	**17. STRUCTURAL STEEL, COLD-FORMED STEEL, AND ALUMINUM USED FOR STRUCTURAL PURPOSES**			
	Material Verification:			
X	a. Verify identification of all materials end: • Mill certificates indicate material properties that comply with requirements, • Material sizes, types and grades comply with requirements.	Periodic	*	2203A.1 (2203.1+), Table 1705A.2.1 Item 3a-3c; AISI S100-07/S2-10 Section A2.1 & A2.2, AISI S200-12 Section A3, AISI S220-11 Section A4. * By special inspector or qualified technician when performed off-site.
X	b. Test unidentified materials	Test	LOR	2203A.1 (2203.1+).
	c. Examine seam welds of HSS shapes	Periodic	SI	DSA IR 17-3.
	Inspection:			
	d. Not used.			
X	e. Verify and document steel fabrication per DSA approved construction documents.	Periodic	SI	Not applicable to cold-formed steel light-frame construction, except for trusses (1705A.2.4).
+	**18. HIGH STRENGTH BOLTS:**	RCSC 2009		
-	**19. WELDING:**			1705A.2.5, Table 1705A.2.1 Items 4 & 5; DSA IR 17-3, AWS D1.1 and AWS D1.8 for structural steel, AWS D1.2 for Aluminum, AWS D1.3 for cold-formed steel, AWS D1.4 for reinforcing steel. (See Appendix for exemptions.)
	Verification of Materials, Equipment, Welders, etc:			
X	a. Verify weld filler material identification markings per AWS designation listed on the DSA approved documents and the WPS.	Periodic	SI	DSA IR 17-3.
X	b. Verify weld filler material manufacturer's certificate of compliance.	Periodic	SI	DSA IR 17-3.
X	c. Verify WPS, welder qualifications and equipment.	Periodic	SI	DSA IR 17-3.
-	**19.1 SHOP WELDING:**			
X	a. Inspect groove welds, multi-pass fillet welds, single pass fillet welds > 5/16", plug and slot welds	Continuous	SI	Table 1705A.2.1 Item 5a1-4. Per AISC 360-10 (and AISC 341-10 as applicable). DSA IR 17-3.
X	b. Inspect single-pass fillet welds ≤ 5/16", floor and roof deck welds	Periodic	SI	1705A.2.2, Table 1705A.2.1 Item 5a.5 & 5a.6. Per AISC 360-10 (and AISC 341-10 as applicable). DSA IR 17-3.
X	c. Inspect welding of stairs and railing systems.	Periodic	SI	1705A.2.1. Per AISC 360-10 (and AISC 341-10 as applicable). AWS D1.1 & D1.3. DSA IR 17-3.
	d. Verification of reinforcing steel weldability other than ASTM A706	Periodic	SI	1705A.3.1; verify carbon equivalent reported on mill certificates. AWS D1.4. DSA IR 17-3.
	e. Inspect welding of reinforcing steel.	Continuous	SI	1705A.3.1, Table 1705A.3 Item 2, and Table 1705A.2.1 Item 5b, 1903A.8. AWS D1.4. DSA IR 17-3.
-	**19.2 FIELD WELDING:**			
	a. Inspect groove welds, multi-pass fillet welds, single pass fillet welds > 5/16", plug and slot welds	Continuous	SI	Table 1705A.2.1 Item 5a1-4. Per AISC 360-10 (and AISC 341-10 as applicable). DSA IR 17-3.
X	b. Inspect single-pass fillet welds ≤ 5/16"	Periodic	SI	Table 1705A.2.1 Item 5a.5. Per AISC 360-10 (and AISC 341-10 as applicable). DSA IR 17-3.
	c. Inspect end-welded studs (ASTM A-108) installation (including bend test)	Periodic	SI	2213A.2 (2212.6.2+); per AISC 360-10 (and AISC 341-10 as epplicable), AWS D1.1. DSA IR 17-3.
	d. Inspect floor and roof deck welds	Periodic	SI	1705A.2.2, Table 1705A.2.1 Item 5a.6; per AISC 360 (and AISC 341 as applicable) & AWS D1.3. DSA IR 17-3.
	e. Inspect welding of structural cold-formed steel	Periodic	SI*	1705A.2.5; AWS D1.3. * May be performed by the project inspector when specifically approved by DSA. DSA IR 17-3.
	f. Inspect welding of stairs and railing systems	Periodic	SI*	1705A.2.1; Per AISC 360-10 (and AISC 341-10 as applicable). AWS D1.1 & D1.3. DSA IR 17-3. * May be performed by the project inspector when specifically approved by DSA.
	g. Verification of reinforcing steel weldability	Periodic	SI	1705A.3.1; verify carbon equivalent reported on mill certificates. DSA IR 17-3.
	h. Inspect welding of reinforcing steel.	Continuous	SI	1705A.3.1, Table 1705A.3 Item 2, and Table 1705A.2.1 Item 5b, 1903A.8. AWS D1.4. DSA IR 17-3.
-	**20. NONDESTRUCTIVE TESTING:**			
X	a. Ultrasonic	Test	LOR	1705A.2.1 & 1705A.2.5. AISC 360-10 N5.5, AISC 341-10 App. Q 5.2. AWS D1.1, D1.8. ANSI/ASNT CP-189, SNT-TC-1A. DSA IR 17-2.
X	b. Magnetic Particle	Test	LOR	
	c.	Test	LOR	
	d.	Test	LOR	
+	**21. STEEL JOISTS AND TRUSSES:**			
+	**22. SPRAY APPLIED FIRE-PROOFING:**			
-	**23. ANCHOR BOLTS, ANCHOR RODS, & OTHER STEEL:**			
	a. Anchor Bolts and Anchor Rods	Test	LOR	IR 17-11 Sample and test anchor bolts and anchor rods not readily identifiable.
	b. Threaded rod not used for foundation anchorage.	Test	LOR	Sample and test threaded rods not readily identifiable per procedures noted in IR 17-11
	c.			
+	**WOOD**			
+	**OTHER**			

THE EXAMPLE OF FORM DSA-103s SHOWN ON THIS SHEET ARE FOR ILLUSTRATION PURPOSE ONLY. A FORM DSA-103 IS TO BE COMPLETED FOR EACH APPLICATION THAT THIS PC IS BEING INCORPORATED INTO AND ALL EXAMPLE FORM DSA-103s ARE TO BE CROSSED OUT ON THIS DRAWING.

2 6" = 1'-0" ***DSA-103 PLYWOOD FLOOR (Concrete Foundation)1***

DSA DIVISION OF THE STATE ARCHITECT – DEPARTMENT OF GENERAL SERVICES

DSA-103 Issued 12/30/2016

List of Required Structural Tests & Special Inspections - 2016 CBC

INCREMENT # # | DSA File No.: # | Application No.: # | Date Submitted: # | Revised: # | Revised: #

School Name | District

IMPORTANT: This form is only a summary list of structural tests and some of the special inspections required for the project. Generally, the structural tests and special inspections noted on this form are those that will be performed by the Geotechnical Engineer of Record, Laboratory of Record, or Special Inspector. The actual complete test and inspection program must be performed as detailed on the DSA approved documents. The appendix at the bottom of this form identifies work NOT subject to DSA requirements for special inspection or structural testing. The project inspector is responsible for providing inspection of all facets of construction, including but not limited to, special inspections not listed on this form such as structural wood framing, high-load wood diaphragms, cold-formed steel framing, anchorage of non-structural components, etc., per Title 24, Part 2, Chapter 17A.

NOTE: This form is also available for projects submitted for review under the 2007, 2010, and 2013 CBC.

INSTRUCTIONS: Click a plus sign (+) before any category or subcategory to reveal additional tests and special inspections. A shaded box indicates a test or special inspection that may be required, depending on the scope of the construction and other issues. A shaded box can be clicked indicating your selection of that test. **Note:** A minus (-) on a category or subcategory heading indicates that it can be collapsed. However, any selections you may have made will be cleared. Click on the "COMPILE" button to show only the tests and inspections finally selected. **For more information on use of this form, see DSA-103.INSTR.**

Note: References are to the 2016 edition of the California Building Code (CBC) unless otherwise noted.

REQUIRED	TEST OR SPECIAL INSPECTION	TYPE [1]	PERFORMED BY [2]	CODE REFERENCE AND NOTES
+	**SOILS**			
+	**CONCRETE**			Table 1705A.3, ACI 318-14 Sections 26.12 & 26.13
+	**MASONRY**			TMS 402-13/ACI 530-13/ASCE 5-13 Table 3.1.3 & TMS 602-13/ACI 530.1-13/ASCE 6-13 Table 5
-	**STEEL, ALUMINUM**			Table 1705A.2.1, AISC 303-10, AISC 360-10, AISC 341-10, AISC 358-10, AISI S100-07/S2-10
-	**17. STRUCTURAL STEEL, COLD-FORMED STEEL, AND ALUMINUM USED FOR STRUCTURAL PURPOSES**			
	Material Verification:			
X	a. Verify identification of all materials and: • Mill certificates indicate material properties that comply with requirements, • Material sizes, types and grades comply with requirements.	Periodic	*	2203A.1 (2203.1+), Table 1705A.2.1 Item 3a-3c; AISI S100-07/S2-10 Section A2.1 & A2.2, AISI S200-12 Section A3, AISI S220-11 Section A4. * By special inspector or qualified technician when performed off-site.
X	b. Test unidentified materials	Test	LOR	2203A.1 (2203.1+).
	c. Examine seam welds of HSS shapes	Periodic	SI	DSA IR 17-3.
	Inspection:			
	d. Not used.			
X	e. Verify and document steel fabrication per DSA approved construction documents.	Periodic	SI	Not applicable to cold-formed steel light-frame construction, except for trusses (1705A.2.4).
+	**18. HIGH STRENGTH BOLTS:**	RCSC 2009		
-	**19. WELDING:**			1705A.2.5, Table 1705A.2.1 Items 4 & 5; DSA IR 17-3, AWS D1.1 and AWS D1.8 for structural steel, AWS D1.2 for Aluminum, AWS D1.3 for cold-formed steel, AWS D1.4 for reinforcing steel. (See Appendix for exemptions.)
	Verification of Materials, Equipment, Welders, etc:			
X	a. Verify weld filler material identification markings per AWS designation listed on the DSA approved documents and the WPS.	Periodic	SI	DSA IR 17-3.
X	b. Verify weld filler material manufacturer's certificate of compliance.	Periodic	SI	DSA IR 17-3.
X	c. Verify WPS, welder qualifications and equipment.	Periodic	SI	DSA IR 17-3.
-	**19.1 SHOP WELDING:**			
X	a. Inspect groove welds, multi-pass fillet welds, single pass fillet welds > 5/16", plug and slot welds	Continuous	SI	Table 1705A.2.1 Item 5a1-4. Per AISC 360-10 (and AISC 341-10 as applicable). DSA IR 17-3.
X	b. Inspect single-pass fillet welds ≤ 5/16", floor and roof deck welds	Periodic	SI	1705A.2.2, Table 1705A.2.1 Item 5a.5 & 5a.6. Per AISC 360-10 (and AISC 341-10 as applicable). DSA IR 17-3.
X	c. Inspect welding of stairs and railing systems.	Periodic	SI	1705A.2.1. Per AISC 360-10 (and AISC 341-10 as applicable). AWS D1.1 & D1.3. DSA IR 17-3.
	d. Verification of reinforcing steel weldability other than ASTM A706	Periodic	SI	1705A.3.1; verify carbon equivalent reported on mill certificates. AWS D1.4. DSA IR 17-3.
	e. Inspect welding of reinforcing steel.	Continuous	SI	1705A.3.1, Table 1705A.3 Item 2, and Table 1705A.2.1 Item 5b, 1903A.8. AWS D1.4. DSA IR 17-3.
-	**19.2 FIELD WELDING:**			
	a. Inspect groove welds, multi-pass fillet welds, single pass fillet welds > 5/16", plug and slot welds	Continuous	SI	Table 1705A.2.1 Item 5a1-4. Per AISC 360-10 (and AISC 341-10 as applicable). DSA IR 17-3.
X	b. Inspect single-pass fillet welds ≤ 5/16"	Periodic	SI	Table 1705A.2.1 Item 5a.5. Per AISC 360-10 (and AISC 341-10 as applicable). DSA IR 17-3.
	c. Inspect end-welded studs (ASTM A-108) installation (including bend test)	Periodic	SI	2213A.2 (2212.6.2+); per AISC 360-10 (and AISC 341-10 as applicable), AWS D1.1. DSA IR 17-3.
	d. Inspect floor and roof deck welds	Periodic	SI	1705A.2.2, Table 1705A.2.1 Item 5a.6; per AISC 360 (and AISC 341 as applicable) & AWS D1.3. DSA IR 17-3.
	e. Inspect welding of structural cold-formed steel	Periodic	SI*	1705A.2.5; AWS D1.3. * May be performed by the project inspector when specifically approved by DSA. DSA IR 17-3.
	f. Inspect welding of stairs and railing systems	Periodic	SI*	1705A.2.1; Per AISC 360-10 (and AISC 341-10 as applicable). AWS D1.1 & D1.3. DSA IR 17-3. * May be performed by the project inspector when specifically approved by DSA.
	g. Verification of reinforcing steel weldability	Periodic	SI	1705A.3.1; verify carbon equivalent reported on mill certificates. DSA IR 17-3.
	h. Inspect welding of reinforcing steel.	Continuous	SI	1705A.3.1, Table 1705A.3 Item 2, and Table 1705A.2.1 Item 5b, 1903A.8. AWS D1.4. DSA IR 17-3.
-	**20. NONDESTRUCTIVE TESTING:**			
X	a. Ultrasonic	Test	LOR	1705A.2.1 & 1705A.2.5. AISC 360-10 N5.5, AISC 341-10 App. Q 5.2. AWS D1.1, D1.8. ANSI/ASNT CP-189, SNT-TC-1A. DSA IR 17-2.
X	b. Magnetic Particle	Test	LOR	
	c.	Test	LOR	
	d.	Test	LOR	
+	**21. STEEL JOISTS AND TRUSSES:**			
+	**22. SPRAY APPLIED FIRE-PROOFING:**			
-	**23. ANCHOR BOLTS, ANCHOR RODS, & OTHER STEEL:**			
	a. Anchor Bolts and Anchor Rods	Test	LOR	IR 17-11 Sample and test anchor bolts and anchor rods not readily identifiable.
	b. Threaded rod not used for foundation anchorage.	Test	LOR	Sample and test threaded rods not readily identifiable per procedures noted in IR 17-11
	c.			
+	**WOOD**			
+	**OTHER**			

THE EXAMPLE OF FORM DSA-103s SHOWN ON THIS SHEET ARE FOR ILLUSTRATION PURPOSE ONLY. A FORM DSA-103 IS TO BE COMPLETED FOR EACH APPLICATION THAT THIS PC IS BEING INCORPORATED INTO AND ALL EXAMPLE FORM DSA-103s ARE TO BE CROSSED OUT ON THIS DRAWING.

1 6" = 1'-0" ***DSA-103 PLYWOOD FLOOR (Wood Foundation)1***

IDENTIFICATION STAMP
DIV. OF THE STATE ARCHITECT
APP: 01-119031 INC:
REVIEWED FOR
SS ☑ FLS ☑ ACS ☑
DATE: 10/22/2020

PROFESSIONAL STAMP

REGISTERED PROFESSIONAL ENGINEER – MANNY D. FRANCH – No. S3380 – STRUCTURAL – STATE OF CALIFORNIA

12/19/2017

THE PLANS, IDEAS & DESIGNS SHOWN ON THESE DRAWINGS ARE THE PROPERTY OF R&S TAVARES ASSOCIATES, INC. DEVISED SOLELY FOR THIS CONTRACT. THESE PLANS SHALL NOT BE USED, IN WHOLE OR IN PART, FOR ANY PURPOSE FOR WHICH THEY WERE NOT INTENDED WITHOUT THE EXPRESS WRITTEN CONSENT OF R&S TAVARES ASSOCIATES, INC. ©

CLIENT

CLASS LEASING LLC
1221 Harley Knox Boulevard
Perris, CA 92571

ORIGINAL PC STATE AGENCY APPROVAL

FILE NUMBER: PC-128
IDENTIFICATION STAMP
DIVISION OF THE STATE ARCHITECT
04 - 116504 INCR: 0
AC RM FLS EA SSR KER
DATE 07/19/2018

PROJECT TITLE

24' x 40' EXPANDABLE TO 120' x 40'

PRE-CHECK (PC) DOCUMENT
Code: [2016] CBC
A separate project application for construction is required.

PROJECT SPECIFIC STATE AGENCY APPROVAL

Revision Schedule

#	Description	Date

SHEET TITLE

DSA-103 T&I PLYWOOD FLOORS

PROJECT NUMBER 17016A

DRAWN BY rMc

CHECKED BY RT

DATE 2017/06/05

SHEET NO. A0.4

CAL GREEN NOTES

CONSTRUCTION WASTE MANAGEMENT

PER 2016 CALGREEN CODE SECTION 5.408.1
CONSTRUCTION WASTE MANAGEMENT MEETS THE FOLLOWING CALGREEN REQUIREMENTS:
I- PERCENTAGE OF WASTE TO BE SALVAGED OR RECYCLED WITH A MINIMUM OF 65% OF NON-HAZARDOUS CONSTRUCTION WASTE.

II- THE CONSTRUCTION AND DEMOLITION MATERIALS WILL BE HANDLED BY A MATERIAL RECOVERY FACILITY (MRF) PROCESSED AND DIVERTED AS NEEDED. THE PROCESS IN PLACE GENERALLY YIELD A 75% OR BETTER DIVERSION RATE.

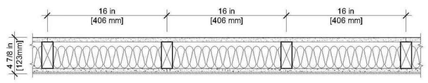

UL U329 or GAP WP 3441 Interior Partitions - Wood Stud	Fire Rating 1 hr.	STC 40 MIN.	Thickness (in.) 4-7/8"

* Gypsum Board - 5/8 in. thick board, applied horizontally or vertically

* Wood Studs - 2 in. x 4 in. wood studs spaced max. 16 in. o/c

* Batts and Blankets - Min. 3-1/2 in. thick mineral wool batt insulation

* Cement Board - 1/2 in. thick board, applied horizontally or vertically

* Bond Coat for Setting Tile - Latex modified portland cement mortar or . 1 type I organic adhesive applied with a notched trowel

* Ceremic Tile - 1/4 in. thick ceramic tile

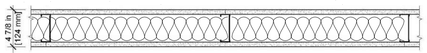

Fire Test UL U465 Steel Stud (Non-loadbearing) Interior Partitions Sound Test: RAL-TL11-125	Fire Rating 1 hr.	STC 40 MIN.	Thickness (in.) 4-7/8"

* Gypsum Board - 5/8 in. thick board, applied vertically, attached to studs with 1 in. long, Type S-12 screws, spaced 8 in. o/c along the edges and 12 in. o/c of the board - SHHETROCK Brand Firecode Core (Type X)

* Steel Studs - 3-5/8 in. wide min. 25 gauge steel. Attached to floor and ceiling with fastners, 24 in o/c - 362S125-18

* Gypsum Board - 5/8 in. thick gypsum board applied vertically or horizontally - SHEETROCK Brand FIRECODE Core (Type X)

* Batts and Blankets - Min. 3-1/2 in. thick mineral wool batt insulation

Moisture control. Exterior door protection:
Nonabsorbent flooring indicated on floor plan, and
nonabsorbent interior wall finish indicated on interior elevations.

See sheets A1.0, A1.1, and A1.2 for door protection
See sheet A5.2 for wall finishes

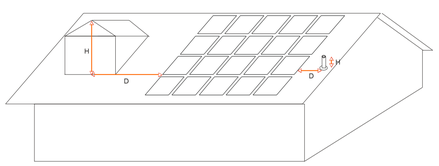

Source: California Energy Commission

Any obstruction, located on the roof or any other part of the building that projects above the solar zone shall be located at a sufficient horizontal distance away from the solar zone, in order to reduce the resulting shading of the solar zone. For each obstruction, the horizontal distance ("D") from the obstruction to the solar zone shall be at least two times the height difference ("H") between the highest point of the obstruction and the horizontal projection of the nearest point of the solar zone.

$$D \geq 2 \times H$$

SECTION	SHEET	2016 CALGREEN AND ENERGY CODE COMPLIANCE CHECKLIST FOR PRE-CHECKED (PC) PERMANENT AND MODULAR RELOCATABLE BUILDING DESIGNS
WATER EFFICIENCY		
5.303.3		**WATER CONSERVING PLUMBING FIXTURES AND FITTINGS:**
5.303.3	P1.0	PLUMBING FIXTURE FLOW RATES ARE SHOWN ON PLUMBING FIXTURE SCHEDULE.
MATERIAL CONSERVATION & RESOURCE EFFICIENCY		
5.407.2.2		**WATER RESISTANCE AND MOISTURE MANAGEMENT:**
5.407.2.2.1	A1.0-1.2 A1.0-1.2, A6.0-6.3	PLANS AND FINISH SCHEDULE SHOW THE LOCATION OF THE MINIMUM REQUIRED INTERIOR DOOR PROTECTION AND INDICATE THE NON-ABSORBENT FLOOR AND WALL FINISHES TO BE INSTALLED 2 FEET AROUND AND PERPENDICULAR TO THE PRIMARY ENTRANCES. PLANS AND SECTIONS INDICATE THE MINIMUM EXTERIOR DOOR PROTECTION WITH THE LOCATION AND DETAILS FOR A 4 FEET DEEP AWNING, ROOF OVERHANG, RECESSED AREA, OR OTHER APPROPRIATE METHOD AT THE PRIMARY ENTRANCES.
5.407.2.2.2	A4.0.1-4.3	ROOF PLANS AND DETAILS INDICATE FLASHINGS INTEGRATED WITH A DRAINAGE PLANE.
5.408.1		**CONSTRUCTION WASTE MANAGEMENT:**
5.408.1	PDF	PROVIDE A LETTER FROM THE LOCAL WASTE AND RECYCLING FACILITY USED BY THE MANUFACTURER WHICH SPECIFIES A CONSTRUCTION WASTE MANAGEMENT PLAN IDENTIFYING: ☑ RECYCLES AND/OR SALVAGES FOR REUSE A MINIMUM OF 65% OF THE NONHAZARDOUS CONSTRUCTION WASTE. ☑ THE CONSTRUCTION WASTE MATERIALS TO BE DIVERTED FROM DISPOSAL BY EFFICIENT USAGE, RECYCLING, REUSE ON THE PROJECT, OR SALVAGED FOR FUTURE USE OR ☑ SPECIFIES IF CONSTRUCTION WASTE MATERIALS WILL BE SORTED ON-SITE OR BULK MIXED. ☑ DIVERSION FACILITY WHERE CONSTRUCTION WASTE WILL BE TAKEN. ☑ SPECIFIES IF THE AMOUNT OF CONSTRUCTION WASTE IS CALCULATED BY WEIGHT OR VOLUME. ☑ WASTE MANAGEMENT COMPANY IS ABLE TO PROVIDE VERIFIABLE DOCUMENTATION THAT 65% OF CONSTRUCTION WASTE MATERIAL WILL BE DIVERTED.
ENVIRONMENTAL QUALITY		
5.504.4		**POLLUTANT CONTROL**
5.504.4.1	A0.5	**ADHESIVES, SEALANTS AND CAULKS**

		FINISH	WHERE USED (TYPE)	MANUFACTURER/SPECIFICATION	VOC	VOC LIMIT (GPL)
5.504.4.2	A0.5	Indoor Carpet Adhesives	NuBroadLok, Mohawk Inc.	NuBroadLok, Mohawk Inc.	0	50
		Carpet Pad Adhesives	N/A			
5.504.4.2	A0.5	Cove Base Adhesives	Interior Base	Henry 440	0	50
5.504.4.3	A0.5	Multi-purpose Construction Adhesives 1	General	Liquid Nails - Heavy Duty construction adhesive	70	70
5.504.4.4	A0.5	Contact Adhesive	General	Henkel - Loctite Light Cure	20	70
5.504.4.2	A0.5	Contact Adhesive	General	Henkel - Loctite Light Cure	20	70
5.504.4.1	A0.5	Architectural 1	Exterior	Sherwin williams - 950A White	33	250
5.504.4.1	A0.5	Architectural 2	Exterior	Sherwin williams - Shermax clear	19	250
5.504.4.1	A0.5	Single ply roof Membrane	Roof Caulk/Sealer	Trenco - Future Flash Sealant	6	450

5.504.4.3	A0.5	**PAINTS AND COATINGS**				
		FINISH	**WHERE USED (TYPE)**	**MANUFACTURER/SPECIFICATION**	**VOC**	**VOC LIMIT (GPL)**
5.504.4.3.1	A0.5	Aerosol Spray Flat Paint	Painted Surface	Krylon	<60	60
5.504.4.3	A0.5	Flat Coatings 1	Painted Surface	Sherwin Williams - Pro Mar 200 Zero	50	50
5.504.4.3	A0.5	Flat Coatings 2	Painted Surface	Dunn Edwards Paints - Azra Hues	40	50
5.504.4.3	A0.5	Flat Coatings 3	Painted Surface	Vista Paints	50	50
		Wall Material 1	FRP Wall Covering	Glassco		
		Wall Material 1	Tackable Wall (Nonabsorbent)	Chatfield Clarke		

5.504.4.4	A0.5	**CARPET SYSTEMS**			
		FINISH	**MANUFACTURER**	**CERTIFICATION ORGANIZATION**	
5.504.4.4	A0.5	Carpet	Mohawk Carpets	Carpet & Rug Institute - Green Label Plus Program	

5.504.4.5		**HARDWOOD PLYWOOD, PARTICLEBOARD, FIBERBOARD WOOD PRODUCTS**				
		FINISH	**WHERE USED (TYPE)**	**MANUFACTURER/SPECIFICATION**	**FORMALDEHYDE EMMISIONS**	**FORMALDEHYDE LIMIT**
5.504.4.5	A0.5	Plywood	Roof / Floor	APA Rated	<.05	0.05

5.504.4.6	A0.5	**RESILIENT FLOORING SYSTEMS**				
		FINISH	**MANUFACTURER**	**CERTIFICATION ORGANIZATION**		
5.504.4.6	A0.5	Vinyl Composition Tile Flooring	Armstrong / Imperial	CA Dept. of Public Health's 2010 Standard Method for the Testing ...		
	A0.5	Sheet Vinyl Flooring	Marmington	CA Dept. of Public Health's 2010 Standard Method for the Testing ...		
		FRP Wall Covering	Glassco	CA Dept. of Public Health's 2010 Standard Method for the Testing ...		
		Tackable Wall	Chatfield Clarke	CA Dept. of Public Health's 2010 Standard Method for the Testing ...		
		FILTER SPECIFICATION:				
5.504.3	M0.1	COVERING OF DUCT OPENINGS AND PROTECTION OF MECHANICAL EQUIPMENT DURING CONSTRUCTION AND SHIPMENT.				
5.504.5.3	M0.1	MECHANICAL SPECIFICATION OR NOTE INCLUDES INFORMATION REQUIRING A MINIMUM MERV 8 FILTER(S) OR HIGHER.				
		INDOOR MOISTURE CONTROL:				
		☑ ATTIC IS UNVENTED				
5.507.4		**ENVIRONMENTAL COMFORT:**				
5.507.4.1	A0.0	**EXTERIOR NOISE TRANSMISSION:** ☑ NOTE ON COVERSHEET THAT STATES - "THIS PC WILL NOT BE PLACED IN ANY OF THE FOLLOWING LOCATIONS: 1- WITHIN THE 65 CNEL NOISE CONTOUR OF AN AIRPORT; 2- WITHIN THE 65 CNEL OR LDN NOISE CONTOUR OF A FREEWAY, EXPRESSWAY, RAILROAD, OR INDUSTRIAL SOURCE GUIDEWAY; 3- WHERE EXPOSED TO NOISE LEVEL OF 65 DB LEQ-1-HR DURING ANY HOUR OF OPERATION."				
5.507.4.3		**INTERIOR SOUND TRANSMISSION:**				
5.507.4.3	A0.5	INTERIOR WALLS MEET MINIMUM 40 STC.				
5.508.1		**OUTDOOR AIR QUALITY:**				
5.508.1	M0.1	HVAC EQUIPMENT DOES NOT CONTAIN CFCS OR HALONS.				

IDENTIFICATION STAMP
DIV. OF THE STATE ARCHITECT
APP: 01-119031 INC:
REVIEWED FOR
SS ☑ FLS ☑ ACS ☑
DATE: 10/22/2020

PROFESSIONAL STAMP

12/19/2017

THE PLANS, IDEAS & DESIGNS SHOWN ON THESE DRAWINGS ARE THE PROPERTY OF R&S TAVARES ASSOCIATES, INC. DEVISED SOLELY FOR THIS CONTRACT. THESE PLANS SHALL NOT BE USED, IN WHOLE OR IN PART, FOR ANY PURPOSE FOR WHICH THEY WERE NOT INTENDED WITHOUT THE EXPRESS WRITTEN CONSENT OF R&S TAVARES ASSOCIATES, INC. ©

CLIENT

CLASS LEASING LLC
1221 Harley Knox Boulevard
Perris, CA 92571

ORIGINAL PC STATE AGENCY APPROVAL

FILE NUMBER: PC-128
IDENTIFICATION STAMP
DIVISION OF THE STATE ARCHITECT
04 - 116504 INCR: 0
AC RM FLS EA SSR KER
DATE 07/19/2018

PROJECT TITLE
24' x 40'
EXPANDABLE TO
120' x 40'

PRE-CHECK (PC) DOCUMENT
Code: [2016] CBC
A separate project application for construction is required.

PROJECT SPECIFIC STATE AGENCY APPROVAL

Revision Schedule

#	Description	Date

SHEET TITLE
CALGREEN SPEC'S

PROJECT NUMBER
17016A

DRAWN BY
MC/SC

CHECKED BY
JA/RT

DATE
2017/06/05

SHEET NO.
A0.5

SHEET OF SHEETS

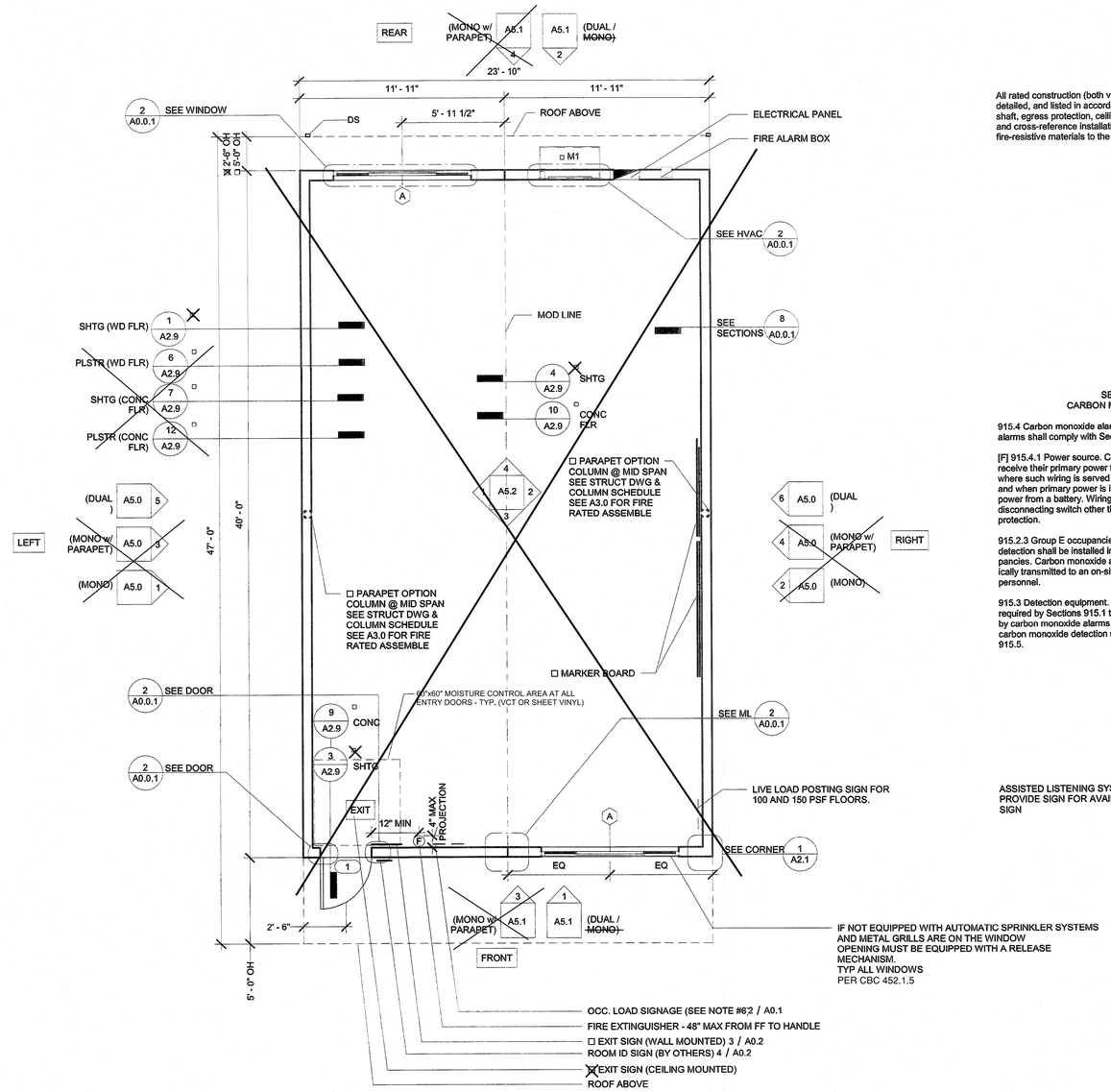

1 *1/4" = 1'-0"*
24x40 Floor Plan

All rated construction (both vertical and horizontal) must be clearly defined, correctly indentified, detailed, and listed in accordance with CBC Chapters 3,5,7 and 10 (fire partitions, barriers, walls, shaft, egress protection, ceilings, opening protection, penetrations, structural members, etc). Provide and cross-reference installation details, including all components and attachment schedules for the fire-resistive materials to the framing. Shall conform in every particular with the design number specified

SECTION 915
CARBON MONOXIDE DETECTION

915.4 Carbon monoxide alarms. Carbon monoxide alarms shall comply with Sections 915.4.1 through 915.4.4.

[F] 915.4.1 Power source. Carbon monoxide alarms shall receive their primary power from the building wiring where such wiring is served from a commercial source, and when primary power is interrupted, shall receive power from a battery. Wiring shall be permanent and with-out a disconnecting switch other than that required forovercurrent protection.

915.2.3 Group E occupancies. Carbon monoxide detection shall be installed in classrooms in Group E occu-pancies. Carbon monoxide alarm signals shall be automat-ically transmitted to an on-site location that is staffed byschool personnel.

915.3 Detection equipment. Carbon monoxide detection required by Sections 915.1 through 915.2.3 shall be provided by carbon monoxide alarms complying with Section 915.4 or carbon monoxide detection systems complying with Section 915.5.

ASSISTED LISTENING SYSTEM REQUIRED IN CLASSROOMS. PROVIDE SIGN FOR AVAILABILITY. SEE A0.2 FOR REQUIRED SIGN

SEE ALT SHEETS FOR FLOOR CONFIGURATION

Wall Schedule

	Stud Size	Sheet	Notes
☒	Wood Wall Stud	S4.5	
☐	Mtl Wall Stud	S4.5	CONTINUOUS EXT R-4 INSULATION

* SEE A0.5 FOR INTERIOR SOUND TRANSMISSION REQUIREMENTS, INTERIOR WALL LOCATION PER SITE SPECIFIC APPLICATION DRAWING,

5 *1/4" = 1'-0"*
Wall Schedule

Fire Rating Schedule

	Rating	Sheet	Notes
☐	1 HOUR - SIDING OVER WD STUDS	A2.5	WP#8105
☐	1 HOUR - PLASTER OVER 1/2" OSB OR 1/2" CDX PLY w/ WD STUDS	A2.6	PER-CBC-TABLE 721.1(2)
☐	1 HOUR - SIDING OVER STL STUDS	A2.7	WP#8006
☐	1 HOUR - PLASTER OVER 1/2" OSB OR 1/2" CDX PLY w/ STL STUDS	A2.8	PER-CBC-TABLE 721.1(2)

SEE A3.0 FOR ADDITIONAL FIRE ASSEMBLY NOTES AND DETAILS

4 *1/4" = 1'-0"*
Fire Rating Schedule

Ext. Finish Schedule

	Finishes	Sheet	Notes
☒	SIDING OVER WD STUDS	A2.1	
☐	PLASTER OVER 1/2" OSB OR 1/2" CDX PLY w/ WD STUDS	A2.2	
☐	SIDING OVER STL STUDS	A2.3	
☐	PLASTER OVER 1/2" OSB OR 1/2" CDX PLY w/ STL STUDS	A2.4	

3 *1/4" = 1'-0"*
Ext. Finish Schedule

Roofing Schedule

"SLOPE"	EDPM	Standing Seam	Parapet	Notes
Dual	☐ A4.2.2	☐ A4.0.2	N/A	
Mono	☐ A4.2.1	☒ A4.0.1	☐ A4.4.1	

HVAC Unit

Keynote	Type	Type Comments
☒ M1	Wall Mounted HVAC	See (M)-Sheets
☐ M2	Roof Mounted HVAV	See (M)-Sheets

IDENTIFICATION STAMP
DIV. OF THE STATE ARCHITECT
APP: 01-119031 INC:
REVIEWED FOR
SS ☑ FLS ☑ ACS ☑
DATE: 10/22/2020

PROFESSIONAL STAMP

REGISTERED PROFESSIONAL ENGINEER MANNY D. FRANCO C-54380 STRUCTURAL STATE OF CALIFORNIA

12/19/2017

THE PLANS, IDEAS & DESIGNS SHOWN ON THESE DRAWINGS ARE THE PROPERTY OF R&S TAVARES ASSOCIATES, INC. DEVISED SOLELY FOR THIS CONTRACT. THESE PLANS SHALL NOT BE USED, IN WHOLE OR IN PART, FOR ANY PURPOSE FOR WHICH THEY WERE NOT INTENDED WITHOUT THE EXPRESS WRITTEN CONSENT OF R&S TAVARES ASSOCIATES, INC. ©

CLIENT

CLASS LEASING LLC
1221 Harley Knox Boulevard
Perris, CA 92571

ORIGINAL PC STATE AGENCY APPROVAL

FILE NUMBER: PC-128
IDENTIFICATION STAMP
DIVISION OF THE STATE ARCHITECT
04 - 116504 INCR: 0
AC RM FLS EA SSR KER
DATE 07/19/2018

PROJECT TITLE

24' x 40'
EXPANDABLE TO
120' x 40'

PRE-CHECK (PC) DOCUMENT
Code: [2016] CBC
A separate project application for construction is required.

PROJECT SPECIFIC STATE AGENCY APPROVAL

Revision Schedule

#	Description	Date

SHEET TITLE
24x40 FLOOR PLAN

PROJECT NUMBER
17016A

DRAWN BY
rMc/SC

CHECKED BY
JA/RT

DATE
2017/06/05

SHEET NO.
A1.0

SHEET OF SHEETS

12/19/2017 1:12:01 PM C:\Users\Leo\Documents\17016 - Arbis, 24x40 PC - MainFile - Low Seismic_Les.rvt

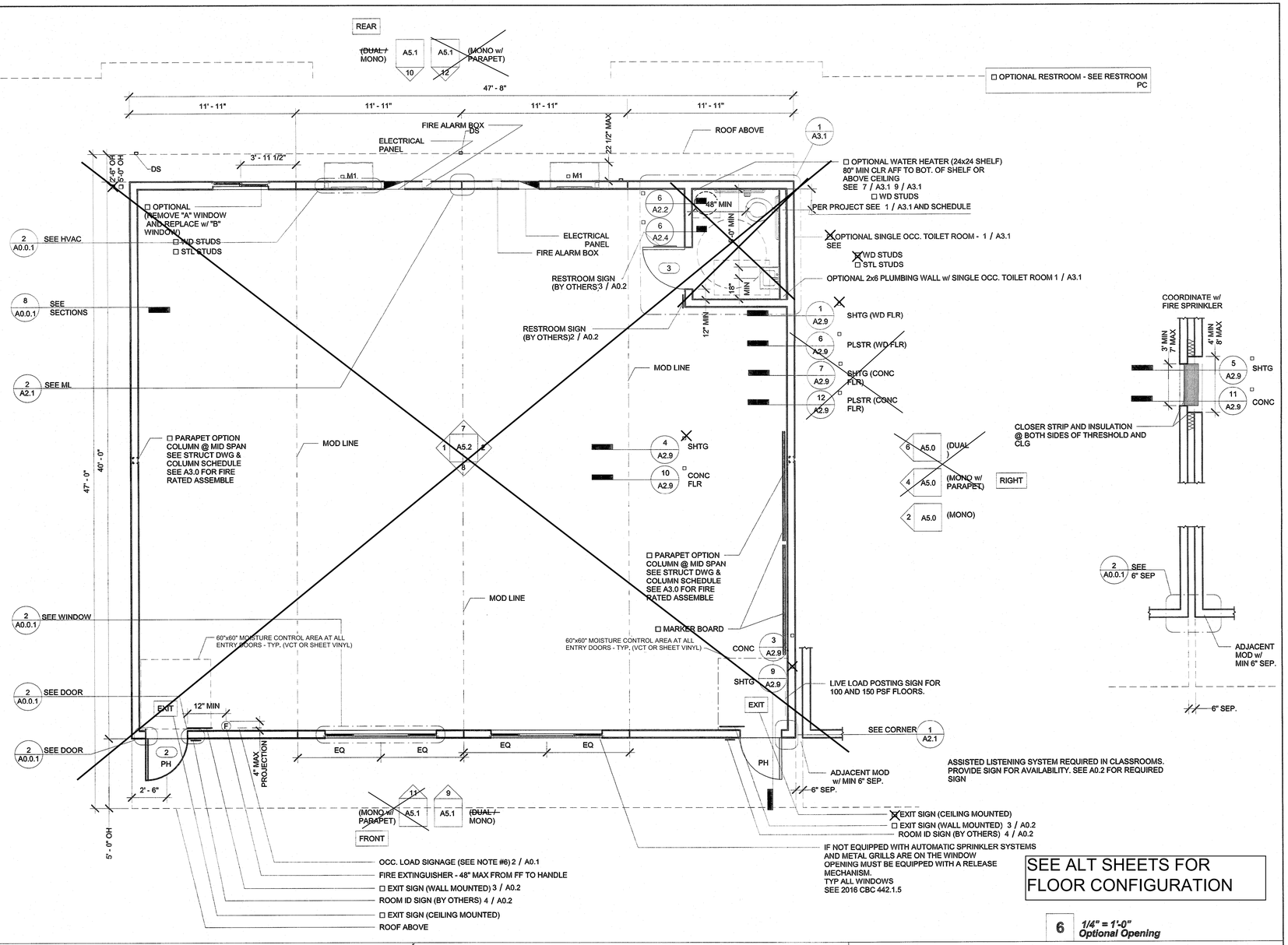

SEE ALT SHEETS FOR FLOOR CONFIGURATION

All rated construction (both vertical and horizontal) must be clearly defined, correctly indentified, detailed, and listed in accordance with CBC Chapters 3,5,7 and 10 (fire partitions, barriers, walls, shaft, egress protection, ceilings, opening protection, penetrations, structural members, etc). Provide and cross-reference installation details, including all components and attachment schedules for the fire-resistive materials to the framing. Shall conform in every particular with the design number specified

SECTION 915
CARBON MONOXIDE DETECTION

915.4 Carbon monoxide alarms. Carbon monoxide alarms shall comply with Sections 915.4.1 through 915.4.4.

[F] 915.4.1 Power source. Carbon monoxide alarms shall receive their primary power from the building wiring where such wiring is served from a commercial source, and when primary power is interrupted, shall receive power from a battery. Wiring shall be permanent and with-out a disconnecting switch other than that required forovercurrent protection.

915.2.3 Group E occupancies. Carbon monoxide detection shall be installed in classrooms in Group E occu-pancies. Carbon monoxide alarm signals shall be automat-ically transmitted to an on-site location that is staffed byschool personnel.

915.3 Detection equipment. Carbon monoxide detection required by Sections 915.1 through 915.2.3 shall be provided by carbon monoxide alarms complying with Section 915.4 or carbon monoxide detection systems complying with Section 915.5.

1 1/4" = 1'-0"
48x40 Floor Plan

6 1/4" = 1'-0"
Optional Opening

Wall Schedule

	Stud Size	Sheet	Notes
☒	Wood Wall Stud	S4.5	
☐	Mtl Wall Stud	S4.5	CONTINUOUS EXT R-4 INSULATION

* SEE A0.5 FOR INTERIOR SOUND TRANSMISSION REQUIREMENTS, INTERIOR WALL LOCATION PER SITE SPECIFIC APPLICATION DRAWING,

5 1/4" = 1'-0"
Wall Schedule

Fire Rating Schedule

	Rating	Sheet	Notes
☐	1 HOUR - SIDING OVER WD STUDS	A2.5	WP#8105
☐	1 HOUR - PLASTER OVER 1/2" OSB OR 1/2" CDX PLY w/ WD STUDS	A2.6	PER-CBC-TABLE 721.1(2)
☐	1 HOUR - SIDING OVER STL STUDS	A2.7	WP#8006
☐	1 HOUR - PLASTER OVER 1/2" OSB OR 1/2" CDX PLY w/ STL STUDS	A2.8	PER-CBC-TABLE 721.1(2)

SEE A3.0 FOR ADDITIONAL FIRE ASSEMBLY NOTES AND DETAILS

4 1/4" = 1'-0"
Fire Rating Schedule

Ext. Finish Schedule

	Finishes	Sheet	Notes
☒	SIDING OVER WD STUDS	A2.1	
☐	PLASTER OVER 1/2" OSB OR 1/2" CDX PLY w/ WD STUDS	A2.2	
☐	SIDING OVER STL STUDS	A2.3	
☐	PLASTER OVER 1/2" OSB OR 1/2" CDX PLY w/ STL STUDS	A2.4	

3 1/4" = 1'-0"
Ext. Finish Schedule

Roofing Schedule

"SLOPE"	EDPM	Standing Seam	Parapet	Notes
Dual	☐ A4.2.2	☐ A4.0.2	N/A	
Mono	☐ A4.2.1	☒ A4.0.1	☐ A4.4.1	

HVAC Unit

Keynote	Type	Type Comments
☒ M1	Wall Mounted HVAC	See (M)-Sheets
☐ M2	Roof Mounted HVAV	See (M)-Sheets

IDENTIFICATION STAMP
DIV. OF THE STATE ARCHITECT
APP: 01-119031 INC:
REVIEWED FOR
SS ☑ FLS ☑ ACS ☑
DATE: 10/22/2020

PROFESSIONAL STAMP

REGISTERED PROFESSIONAL ENGINEER MANNY D. FRANCO JR. No. S6380 STRUCTURAL STATE OF CALIFORNIA

12/19/2017

THE PLANS, IDEAS & DESIGNS SHOWN ON THESE DRAWINGS ARE THE PROPERTY OF R&S TAVARES ASSOCIATES, INC. DEVISED SOLELY FOR THIS CONTRACT. THESE PLANS SHALL NOT BE USED, IN WHOLE OR IN PART, FOR ANY PURPOSE FOR WHICH THEY WERE NOT INTENDED WITHOUT THE EXPRESS WRITTEN CONSENT OF R&S TAVARES ASSOCIATES, INC. ©

CLIENT

CLASS LEASING LLC
1221 Harley Knox Boulevard
Perris, CA 92571

ORIGINAL PC STATE AGENCY APPROVAL

FILE NUMBER: PC-128
IDENTIFICATION STAMP
DIVISION OF THE STATE ARCHITECT
04 - 116504 INCR: 0
AC RM FLS EA SSR KER
DATE 07/19/2018

PROJECT TITLE

24' x 40'
EXPANDABLE TO
120' x 40'

PRE-CHECK (PC) DOCUMENT
Code: [2016] CBC
A separate project application for construction is required.

PROJECT SPECIFIC STATE AGENCY APPROVAL

Revision Schedule

#	Description	Date

SHEET TITLE
48x40 FLOOR PLAN

PROJECT NUMBER
17016A

DRAWN BY
rMc/SC

CHECKED BY
JA/RT

DATE
2017/06/05

SHEET NO.
A1.2

SHEET OF SHEETS

12/19/2017 1:12:06 PM C:\Users\Lee\Documents\17016 - Arlen, 24x40 PC - MainFile - Low Seismic_Lee.rvt

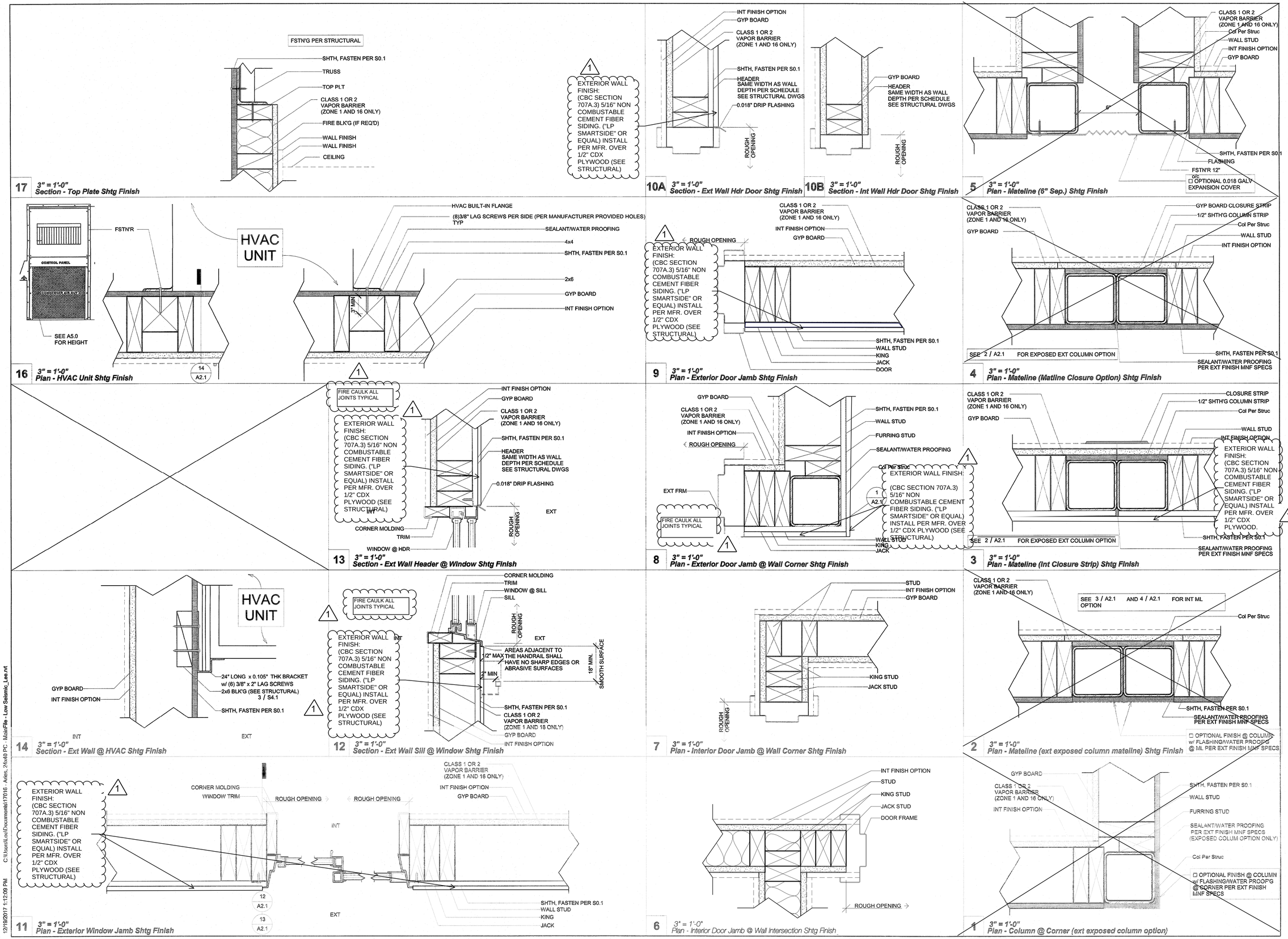

IDENTIFICATION STAMP
DIV. OF THE STATE ARCHITECT
APP: 01-119031 INC:
REVIEWED FOR
SS ☑ FLS ☑ ACS ☑
DATE: 10/22/2020

PROFESSIONAL STAMP

REGISTERED PROFESSIONAL ENGINEER
MANNY D. FRIAS
No. 53380
STRUCTURAL
STATE OF CALIFORNIA

12/19/2017

THE PLANS, IDEAS & DESIGNS SHOWN ON THESE DRAWINGS ARE THE PROPERTY OF R&S TAVARES ASSOCIATES, INC. DEVISED SOLELY FOR THIS CONTRACT. THESE PLANS SHALL NOT BE USED, IN WHOLE OR IN PART, FOR ANY PURPOSE FOR WHICH THEY WERE NOT INTENDED WITHOUT THE EXPRESS WRITTEN CONSENT OF R&S TAVARES ASSOCIATES, INC. ©

CLIENT

CLASS LEASING LLC
1221 Harley Knox Boulevard
Perris, CA 92571

ORIGINAL PC STATE AGENCY APPROVAL

FILE NUMBER: PC-128
IDENTIFICATION STAMP
DIVISION OF THE STATE ARCHITECT
04 - 116504 INCR: 0
AC RM FLS EA SSR KER
DATE 07/19/2018

PROJECT TITLE

24' x 40'
EXPANDABLE TO
120' x 40'

PRE-CHECK (PC) DOCUMENT
Code: [2016] CBC
A separate project application for construction is required.

PROJECT SPECIFIC STATE AGENCY APPROVAL

Revision Schedule

#	Description	Date

SHEET TITLE

ARCHITECTURAL DETAILS (WOOD FRAMING SHTG FINISH)

PROJECT NUMBER 17016A

DRAWN BY rMc/SC

CHECKED BY JA/RT

DATE 2017/06/05

SHEET NO. A2.1

SHEET OF SHEETS

12/19/2017 1:12:09 PM C:\Users\LeaI\Documents\17016 - Aries, 24x40 PC - MainFile - Low Seismic_Les.rvt

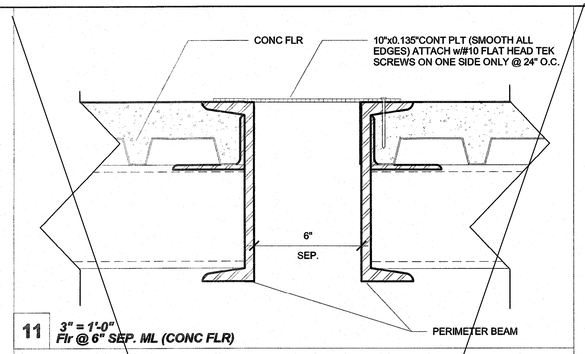

11 3" = 1'-0"
Flr @ 6" SEP. ML (CONC FLR)

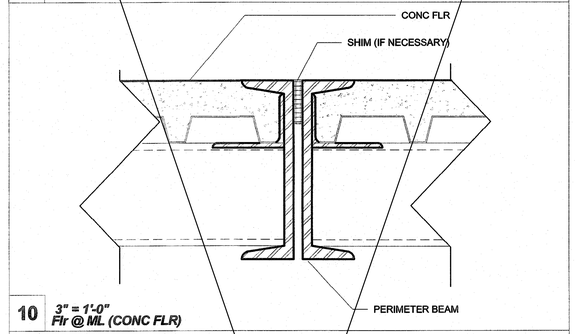

10 3" = 1'-0"
Flr @ ML (CONC FLR)

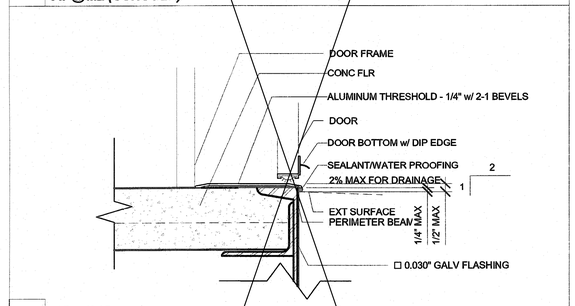

9 3" = 1'-0"
Typ Sill Plt @ Threshold (CONC FLR)

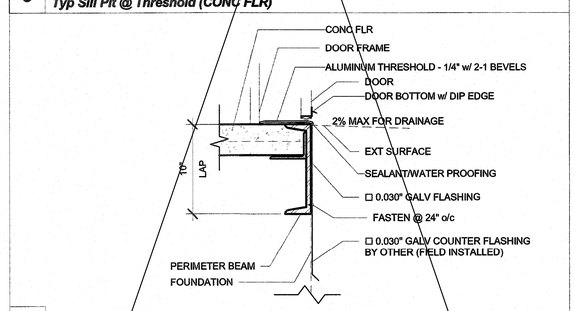

8 1 1/2" = 1'-0"
Threshold @ Fnd (CONC FLR)

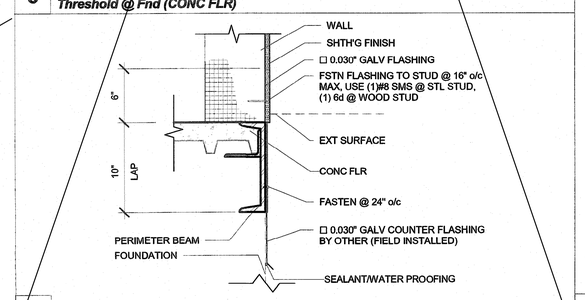

7 1 1/2" = 1'-0"
Typ Skirt @ Fnd SHTH'G FIN (CONC FLR)

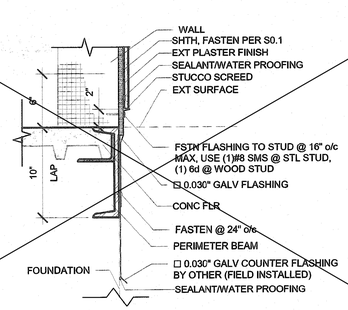

12 1 1/2" = 1'-0"
Typ Skirt @ Fnd PLSTR FIN (CONC FLR)

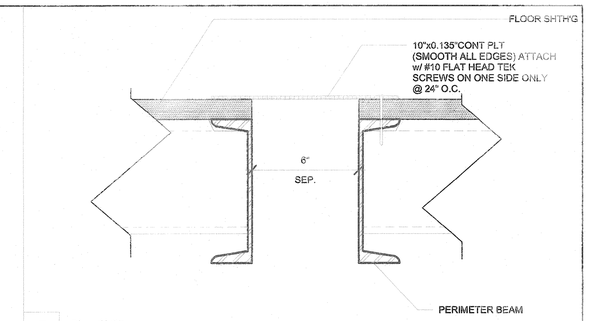

5 3" = 1'-0"
Flr @ 6" SEP. ML (WD FLR)

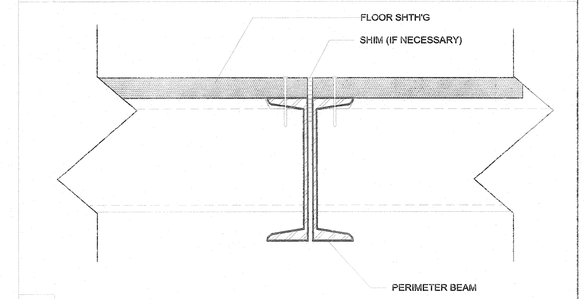

4 3" = 1'-0"
Flr @ ML (WD FLR)

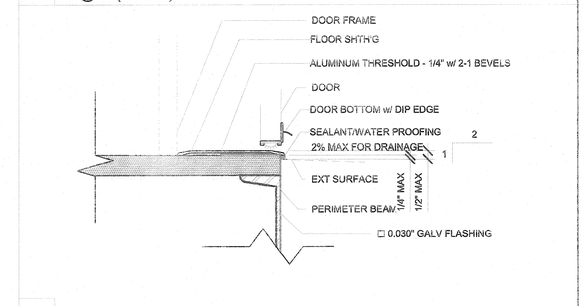

3 3" = 1'-0"
Typ Sill Plt @ Threshold (WD FLR)

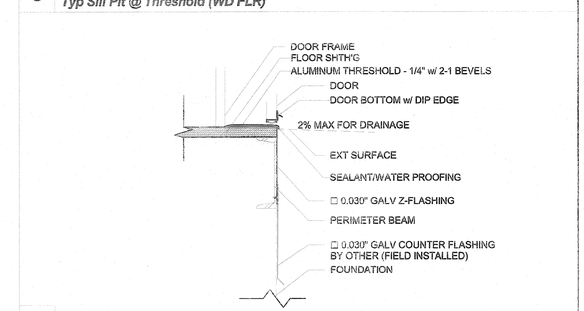

2 1 1/2" = 1'-0"
Threshold @ Fnd (WD FLR)

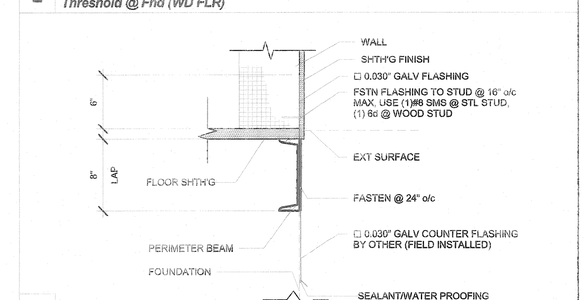

1 1 1/2" = 1'-0"
Typ Skirt @ Fnd SHTH'G FIN (WD FLR)

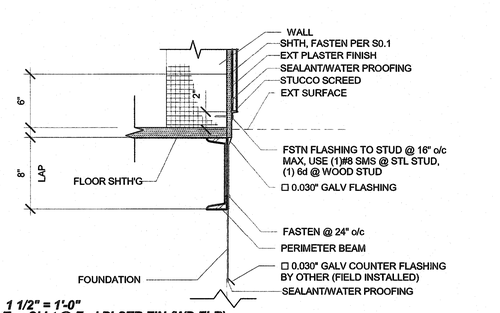

6 1 1/2" = 1'-0"
Typ Skirt @ Fnd PLSTR FIN (WD FLR)

IDENTIFICATION STAMP
DIV. OF THE STATE ARCHITECT
APP: 01-119031 INC:
REVIEWED FOR
SS ☑ FLS ☑ ACS ☑
DATE: 10/22/2020

PROFESSIONAL STAMP

REGISTERED PROFESSIONAL ENGINEER MANNY D. FRANCO C-56380 STRUCTURAL STATE OF CALIFORNIA

12/19/2017

THE PLANS, IDEAS & DESIGNS SHOWN ON THESE DRAWINGS ARE THE PROPERTY OF R&S TAVARES ASSOCIATES, INC. DEVISED SOLELY FOR THIS CONTRACT. THESE PLANS SHALL NOT BE USED, IN WHOLE OR IN PART, FOR ANY PURPOSE FOR WHICH THEY WERE NOT INTENDED WITHOUT THE EXPRESS WRITTEN CONSENT OF R&S TAVARES ASSOCIATES, INC. ©

CLIENT

CLASS LEASING LLC
1221 Harley Knox Boulevard
Perris, CA 92571

ORIGINAL PC STATE AGENCY APPROVAL

FILE NUMBER: PC-128
IDENTIFICATION STAMP
DIVISION OF THE STATE ARCHITECT
04 - 116504 INCR: 0
AC RM FLS EA SSR KER
DATE 07/19/2018

PROJECT TITLE

24' x 40'
EXPANDABLE TO
120' x 40'

PRE-CHECK (PC) DOCUMENT
Code: [2016] CBC
A separate project application for construction is required.

PROJECT SPECIFIC STATE AGENCY APPROVAL

Revision Schedule

#	Description	Date

SHEET TITLE

ARCHITECTURAL DETAILS (FLOOR)

PROJECT NUMBER
17016A

DRAWN BY
rMc/SC

CHECKED BY
JA/RT

DATE
2017/06/05

SHEET NO.
A2.9

SHEET OF SHEETS

12/18/2017 3:37:28 PM C:\Users\Sarah\Documents\17016 - Aries, 24x40 PC - MainFile - Low Seismic_Sarah.rvt

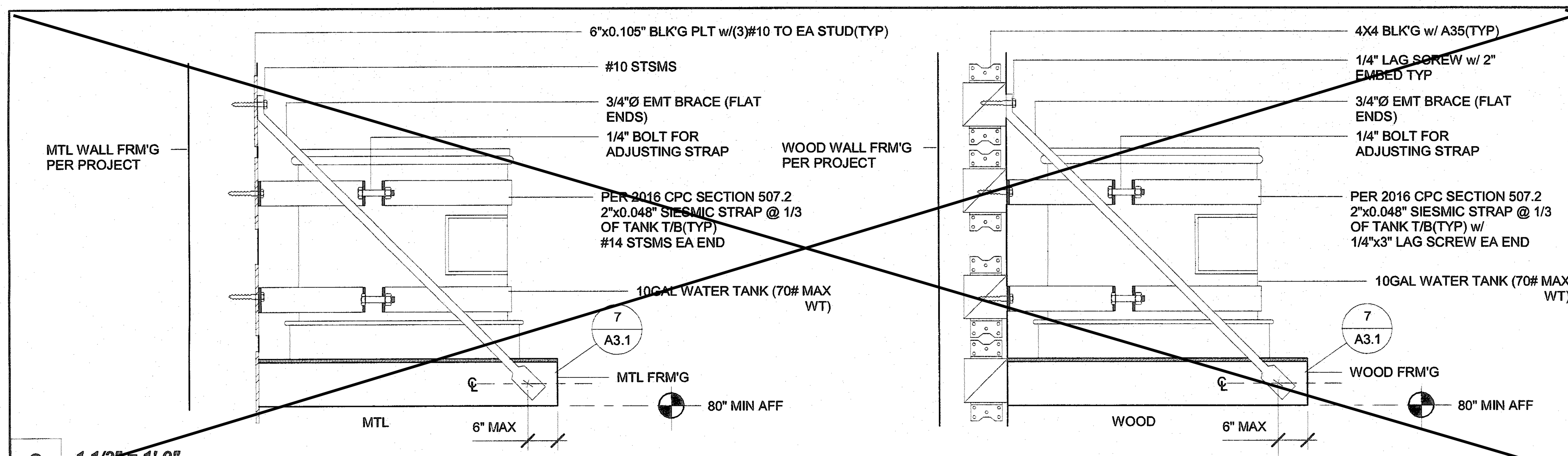

9 1 1/2" = 1'-0" *Water Heater Tank Bracing*

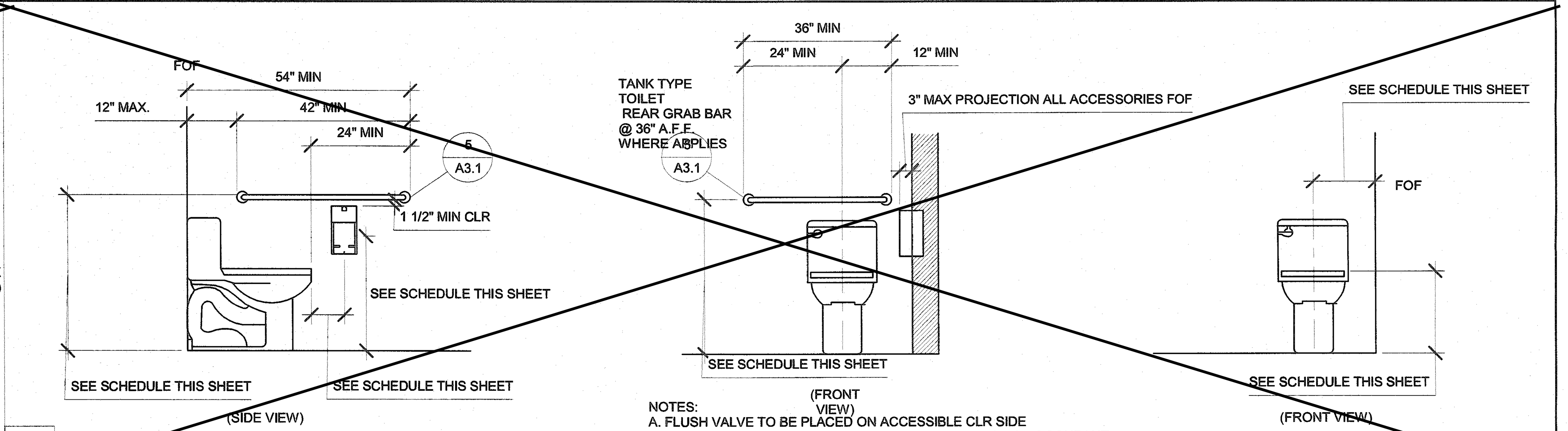

NOTES:
A. FLUSH VALVE TO BE PLACED ON ACCESSIBLE CLR SIDE
B. ALL DIMENSION TO BE PER PROJECT BASED ON AGE OF OCCUPANT
C. ALL DIMENSION PER ADA
- STANDARD DIMENSIONS SHALL NOT BE USED IN SINGLE OCC. BATHROOM

4 1/2" = 1'-0" *Tank Toilet*

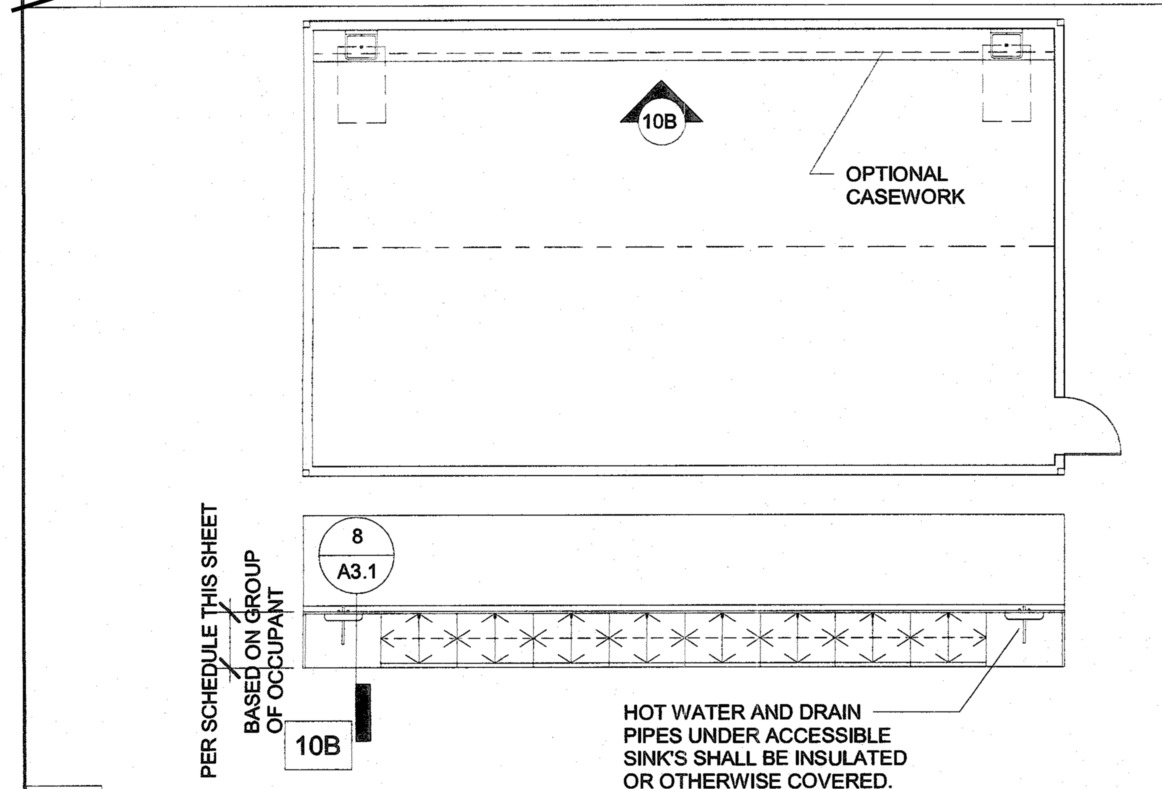

10 1/8" = 1'-0" *Optional Casework*

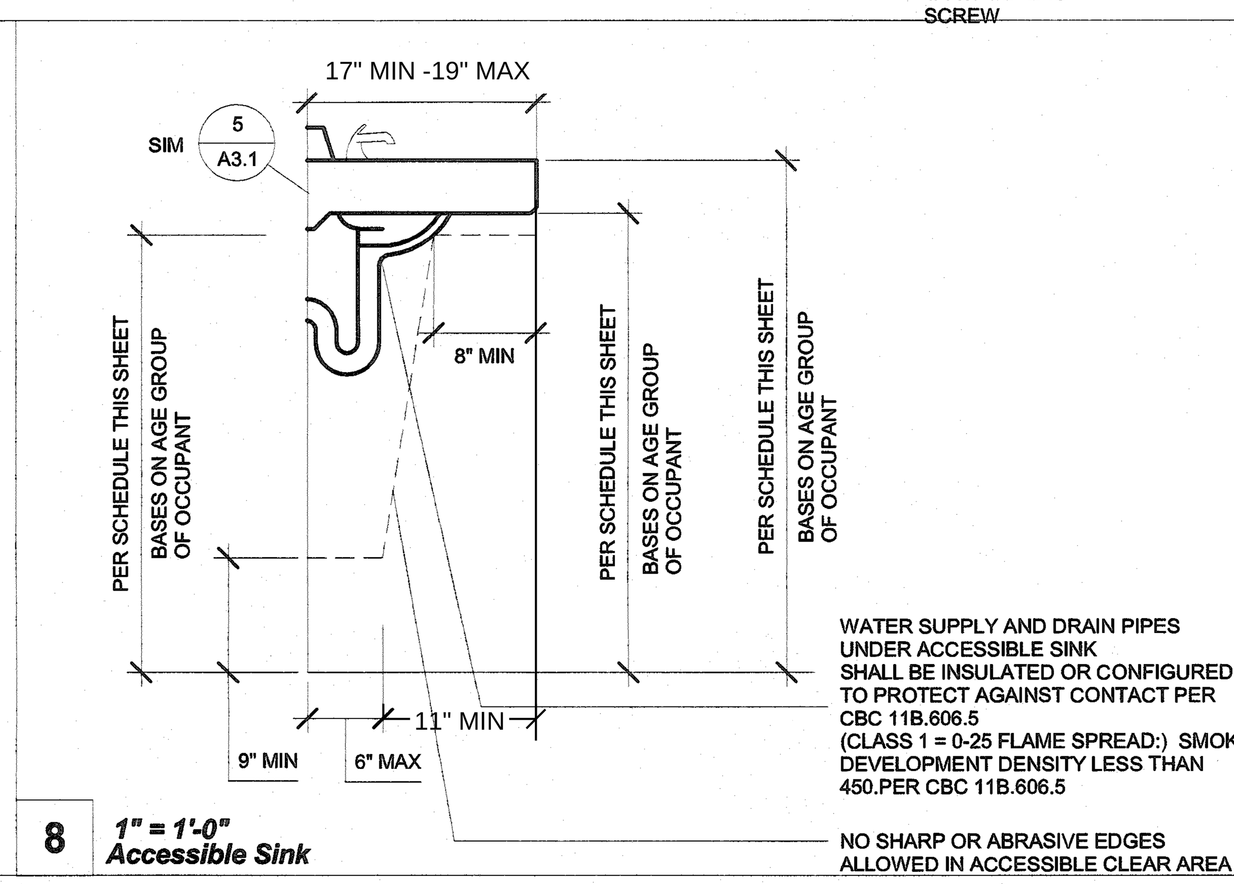

8 1" = 1'-0" *Accessible Sink*

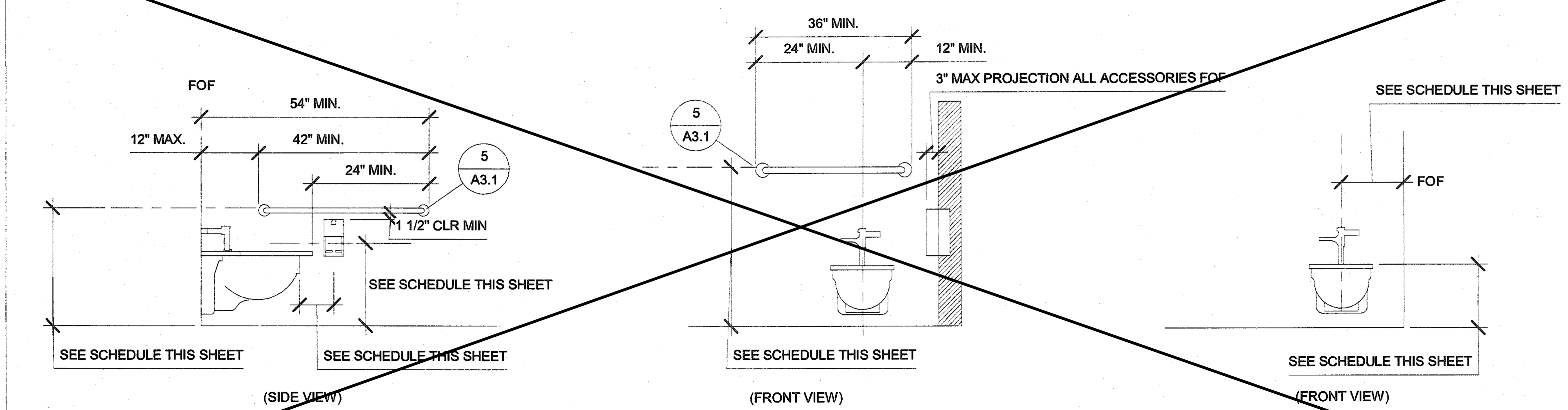

NOTES:
A. FLUSH VALVE TO BE PLACED ON ACCESSIBLE CLR SIDE
B. ALL DIMENSION TO BE PER PROJECT BASED ON AGE OF OCCUPANT
C. ALL DIMENSION PER ADA/CBC
- STANDARD DIMENSIONS SHALL NOT BE USED IN SINGLE OCC. BATHROOM

3 1/2" = 1'-0" *Wall Mounted Toilet*

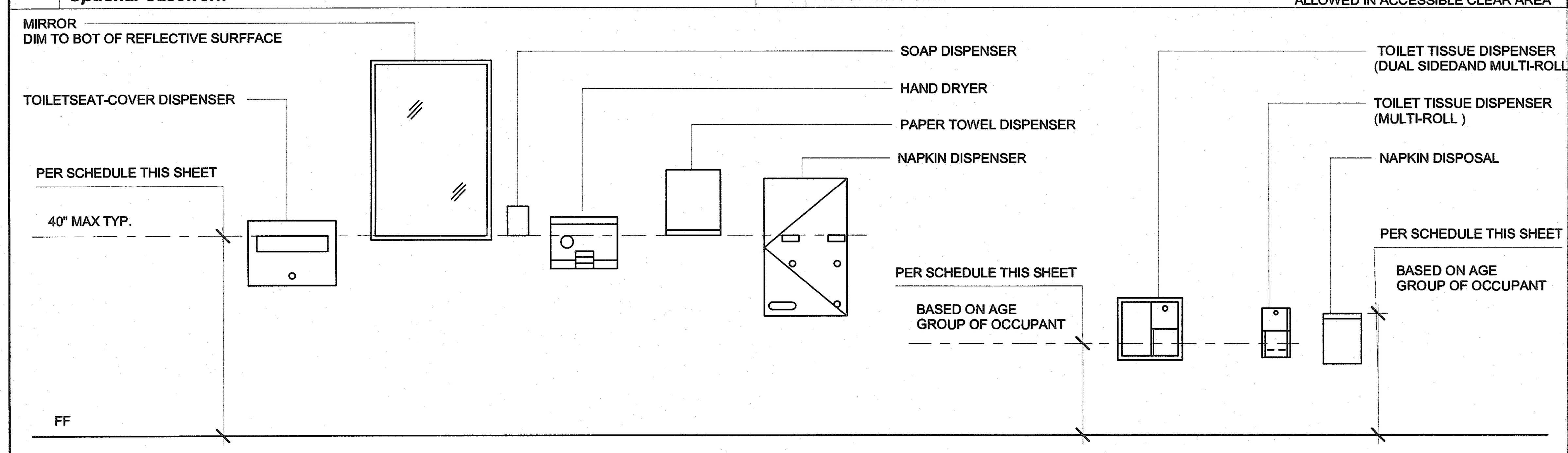

MAXIMUM 3" PROJECTION FOR ALL ACCESSORIES (UNO)

6 1/2" = 1'-0" *Mounting Heights*

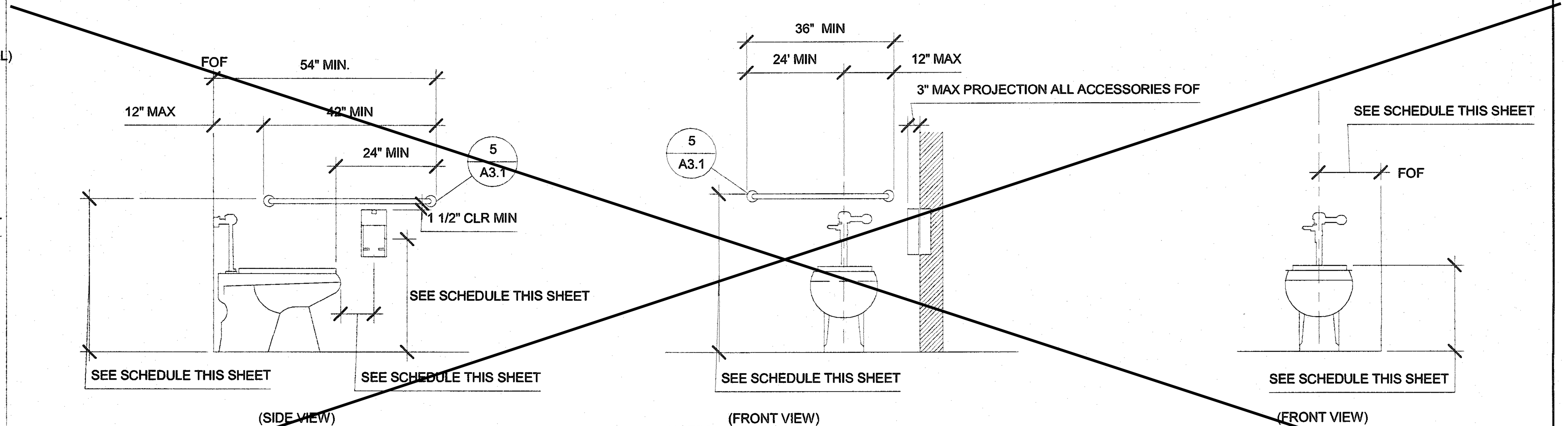

NOTES:
A. FLUSH VALVE TO BE PLACED ON ACCESSIBLE CLR SIDE
B. ALL DIMENSION TO BE PER PROJECT BASED ON AGE OF OCCUPANT
C. ALL DIMENSION PER ADA/CBC
- STANDARD DIMENSIONS SHALL NOT BE USED IN SINGLE OCC. BATHROOM

2 1/2" = 1'-0" *Floor Mounted Toilet*

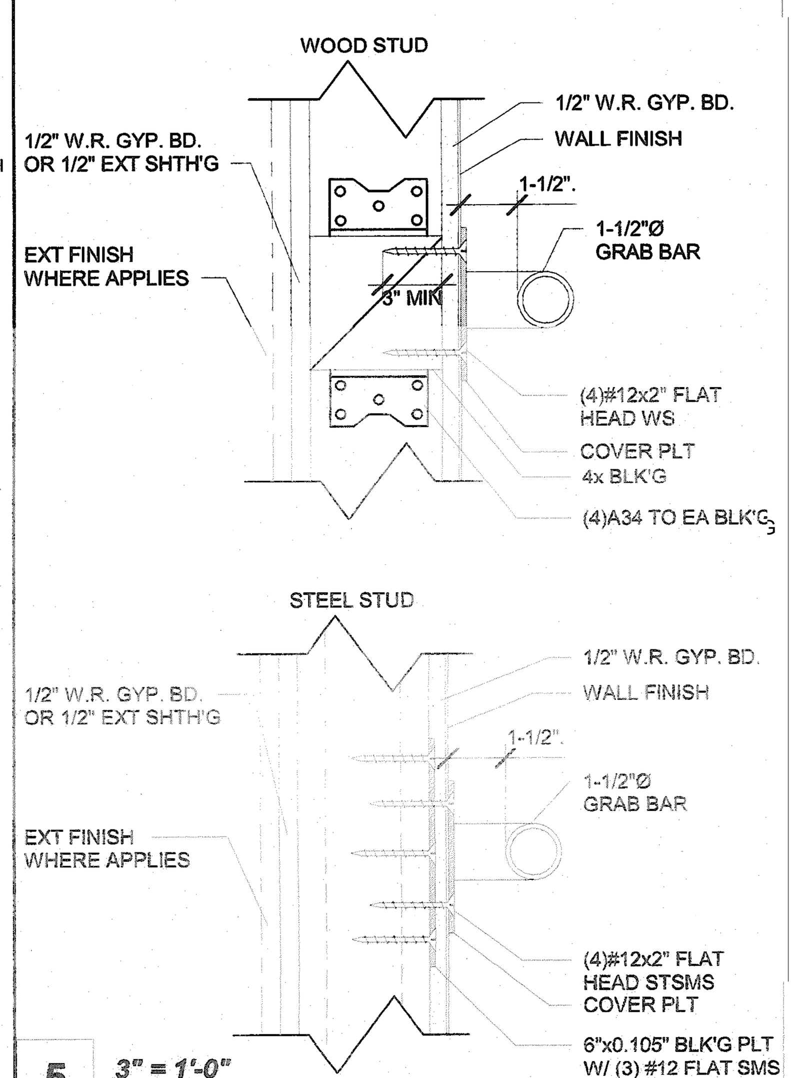

5 3" = 1'-0" *Grab Bar Mounting*

RECOMMENDED ACCESSIBLE MOUNTING HEIGHT PER CBC TABLE 11B609.4

TYPE	□	□	□	□	□	□
AGE GROUP	CBC ADULT	AGE 12 AND UP	AGES 9 THROUGH 12	AGES 5 THROUGH 8	AGES 3 AND 4	AGES 5 AND 12
TOILET CENTERING FROM WALL	17" - 18"	17" - 18"	15" - 18"	12" - 15"	12"	15"
TOILET SEAT HEIGHT	17" - 19"	17" - 19"	15" - 17"	12" - 15"	11" - 12"	15"
TOILET FRONT CLEARANCE	48"	48"	48"	48"	48"	48"
GRAB BAR HEIGHT (TOP OF BAR)	33" - 36"	33" - 36"	25" - 27"	20" - 25"	18" - 20"	25"
TOILET PAPER IN FRONT OF TOILET	7"-9" CL	7" - 9"	7" - 9"	7" - 9"	7" - 9"	7" - 9"
TOILET PAPER DISPENSER HEIGHT OUTLET ~~(CENTER)~~	19" MIN.	19" MIN.	17" - 19"	14" - 17"	14"	17"
NAPKIN DISPOSAL IN FRONT OF TOILET	~~12" MAX.~~	12" MAX.	12" MAX.	N/A	N/A	12"MAX
NAPKIN DISPOSAL HEIGHT (TO TOP)	~~25"-30"~~	25"-30"	25"-30"	N/A	N/A	25"-30"
MIRROR HEIGHT (TO REFLECTIVE SURFACE)	40" MAX.	40" MAX.	40" MAX.	36" MAX.	32" MAX.	36" MAX.
TOILET SEAT COVER DISPENSER HEIGHT	40" MAX	40" MAX	40" MAX	36" MAX	32" MAX	36" MAX
*SINK (TOP)	34" MAX.	34" MAX.	34" MAX.	31" MAX.	*24" MAX.	31" MAX.
*SINK (BOT)	29" MIN	29" MIN.	27" MIN.	24" MIN.	19" MIN.	27" MIN.
SOAP DISPENSER	40" MAX.	40" MAX.	40" MAX.	36" MAX.	32" MAX.	36" MAX.
HAND DRYER (TOP OF CONTROL)	40" MAX.	40" MAX.	40" MAX.	36" MAX.	32" MAX.	36" MAX.
NAPKIN DISPENSER HEIGHT (TOP OF DISP.)	40" MAX.	40" MAX.	40" MAX.	N/A	N/A	36" MAX
PAPER TOWEL DISPENSER HEIGHT	40" MAX.	40" MAX.	40" MAX.	36" MAX.	32" MAX.	36" MAX.

*SINK SHALL ACCOMMODATE SIDE APPROACH w/ 30x48 CLR SPACE
*SEE DETAIL THIS SHEET FOR DIMENSIONS AND NOTES ON KNEE AND TOE CLEARANCE

BETWEEN TOILET PAPER HOLDER AND BACK WALL
19" MINIMUM

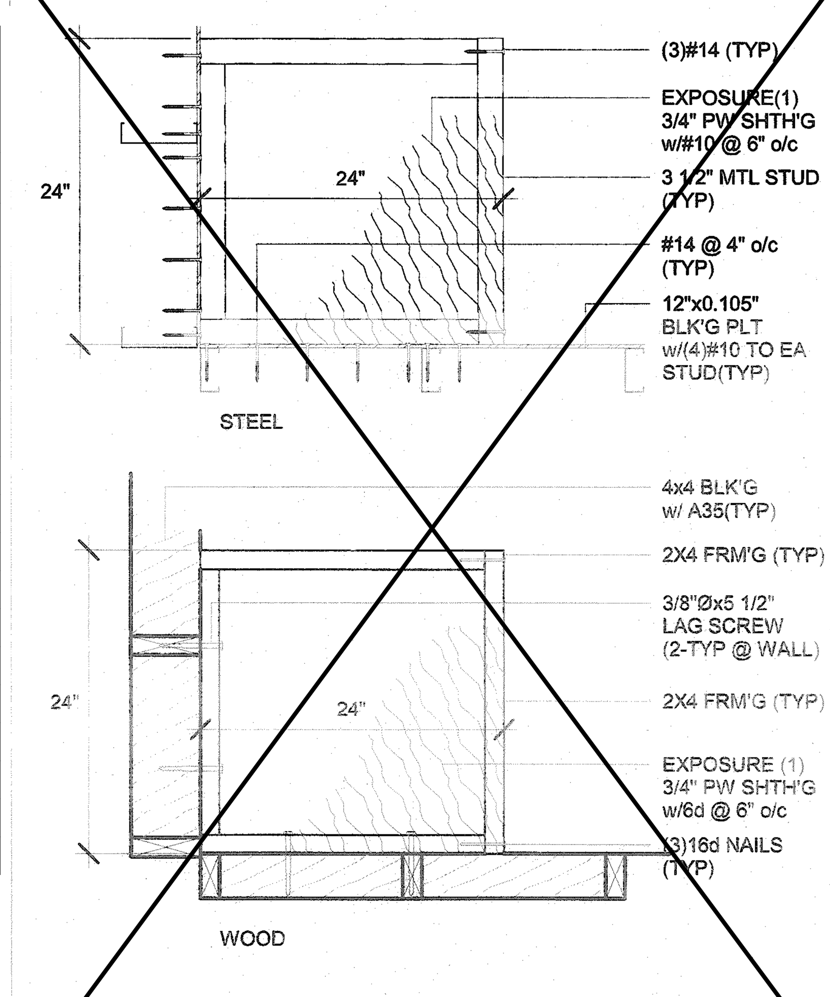

7 1" = 1'-0" *Water Heater Shelf Framing*

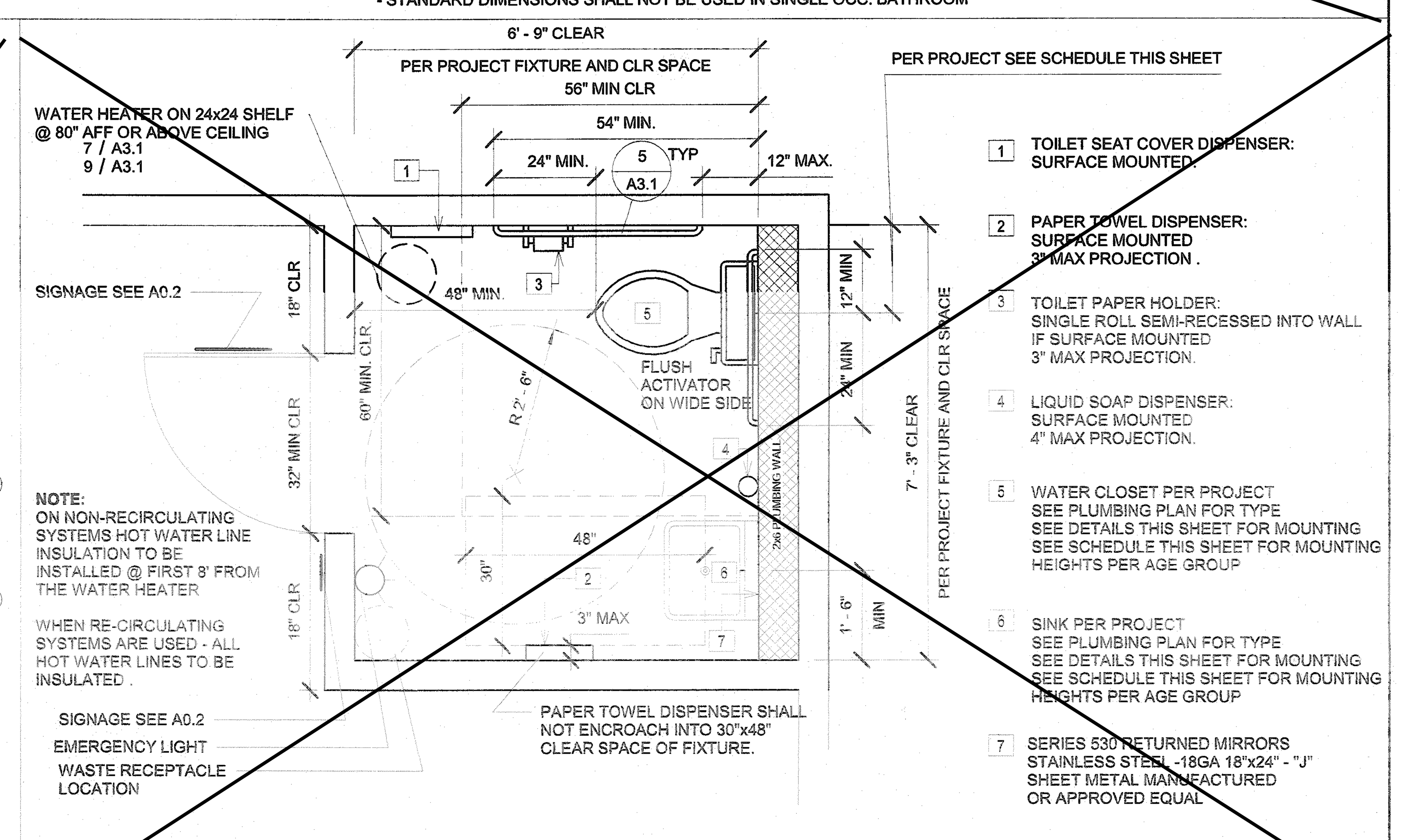

NOTE:
ON NON-RECIRCULATING SYSTEMS HOT WATER LINE INSULATION TO BE INSTALLED @ FIRST 8' FROM THE WATER HEATER

WHEN RE-CIRCULATING SYSTEMS ARE USED - ALL HOT WATER LINES TO BE INSULATED.

1. TOILET SEAT COVER DISPENSER: SURFACE MOUNTED
2. PAPER TOWEL DISPENSER: SURFACE MOUNTED 3" MAX PROJECTION.
3. TOILET PAPER HOLDER: SINGLE ROLL SEMI-RECESSED INTO WALL IF SURFACE MOUNTED 3" MAX PROJECTION.
4. LIQUID SOAP DISPENSER: SURFACE MOUNTED 4" MAX PROJECTION.
5. WATER CLOSET PER PROJECT SEE PLUMBING PLAN FOR TYPE SEE DETAILS THIS SHEET FOR MOUNTING SEE SCHEDULE THIS SHEET FOR MOUNTING HEIGHTS PER AGE GROUP
6. SINK PER PROJECT SEE PLUMBING PLAN FOR TYPE SEE DETAILS THIS SHEET FOR MOUNTING SEE SCHEDULE THIS SHEET FOR MOUNTING HEIGHTS PER AGE GROUP
7. SERIES 530 RETURNED MIRRORS STAINLESS STEEL -18GA 18"x24" - "J" SHEET METAL MANUFACTURED OR APPROVED EQUAL

1 1/2" = 1'-0" *Accessible Single Occ Bathroom Plan*

C:\Users\Lee\Documents\17016 - Aries, 24x40 PC - MainFile - Low Seismic_Lee.rvt
12/19/2017 1:12:35 PM

IDENTIFICATION STAMP
DIV. OF THE STATE ARCHITECT
APP: 01-119031 INC:
REVIEWED FOR
SS ☑ FLS ☑ ACS ☑
DATE: 10/22/2020

PROFESSIONAL STAMP
REGISTERED PROFESSIONAL ENGINEER MANNY D. FRANCO S4380 STRUCTURAL STATE OF CALIFORNIA
12/19/2017

THE PLANS, IDEAS & DESIGNS SHOWN ON THESE DRAWINGS ARE THE PROPERTY OF R&S TAVARES ASSOCIATES, INC. DEVISED SOLELY FOR THIS CONTRACT. THESE PLANS SHALL NOT BE USED, IN WHOLE OR IN PART, FOR ANY PURPOSE FOR WHICH THEY WERE NOT INTENDED WITHOUT THE EXPRESS WRITTEN CONSENT OF R&S TAVARES ASSOCIATES, INC. ©

CLIENT
CLASS LEASING LLC
1221 Harley Knox Boulevard
Perris, CA 92571

ORIGINAL PC STATE AGENCY APPROVAL
FILE NUMBER: PC-128
IDENTIFICATION STAMP
DIVISION OF THE STATE ARCHITECT
04 - 116504 INCR: 0
AC RM FLS EA SSR KER
DATE 07/19/2018

PROJECT TITLE
24' x 40' EXPANDABLE TO 120' x 40'

PRE-CHECK (PC) DOCUMENT
Code: 2016 CBC
A separate project application for construction is required.

PROJECT SPECIFIC STATE AGENCY APPROVAL

Revision Schedule

#	Description	Date

SHEET TITLE
SINGLE OCC. BATHROOM

PROJECT NUMBER 17016A
DRAWN BY rMc/SC
CHECKED BY JA/RT
DATE 2017/06/05
SHEET NO. A3.1

SEE ALT SHEETS FOR FLOOR CONFIGURATION

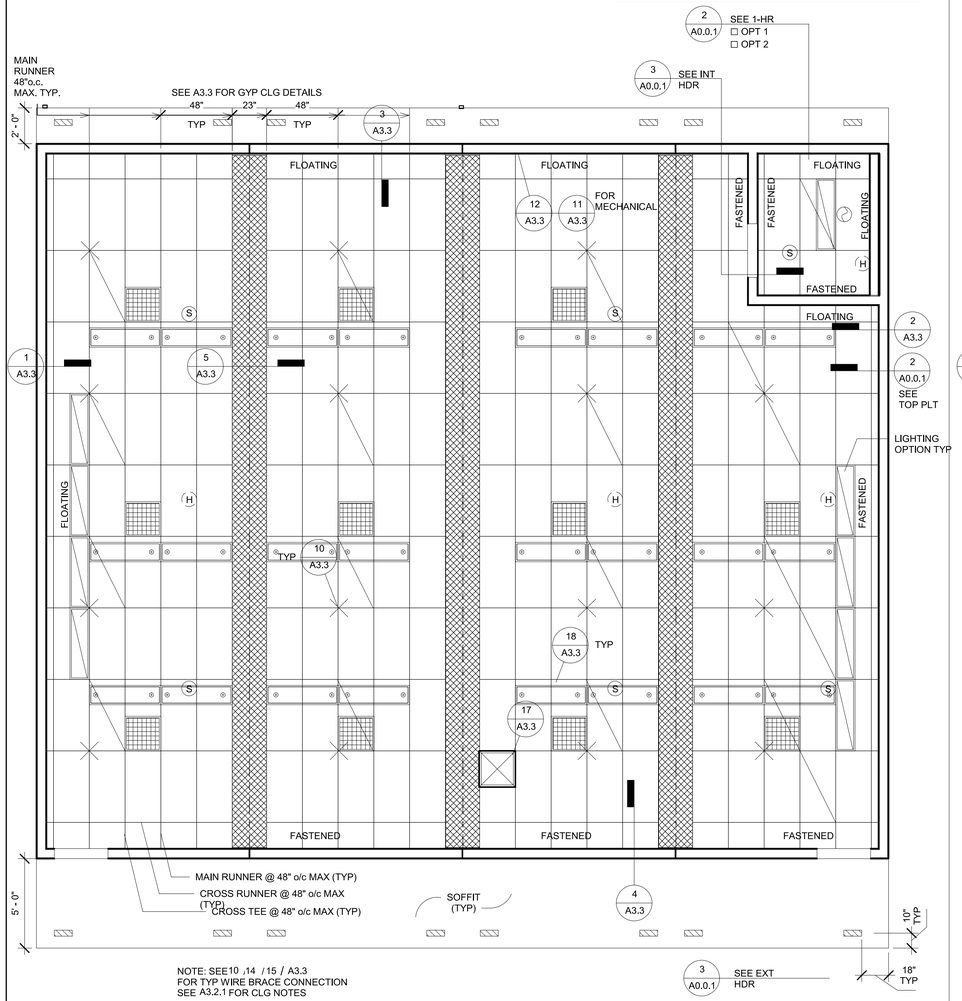

NOTE: SEE10 ,14 / 15 / A3.3
FOR TYP WIRE BRACE CONNECTION
SEE A3.2.1 FOR CLG NOTES

3 *1/4" = 1'-0"*
48x40 RCP(A)

SEE A3.3 FOR GYP CLG DETAILS

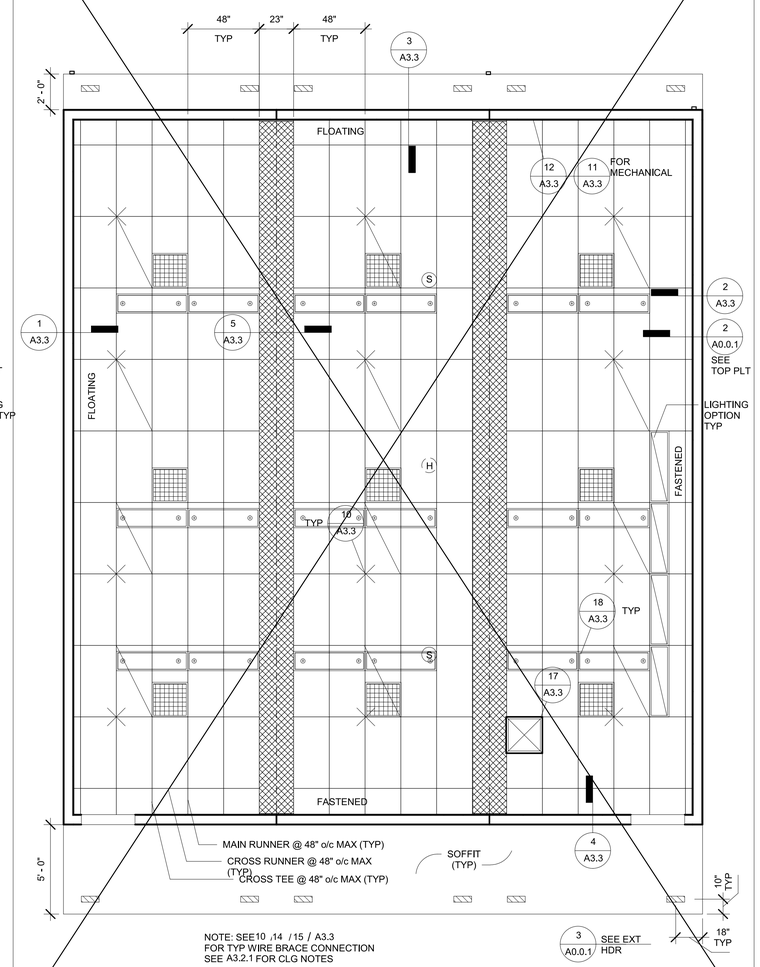

NOTE: SEE10 ,14 / 15 / A3.3
FOR TYP WIRE BRACE CONNECTION
SEE A3.2.1 FOR CLG NOTES

2 *1/4" = 1'-0"*
36x40 RCP(A)

SEE ALT SHEETS FOR FLOOR CONFIGURATION

SEE A3.3 FOR GYP CLG DETAILS

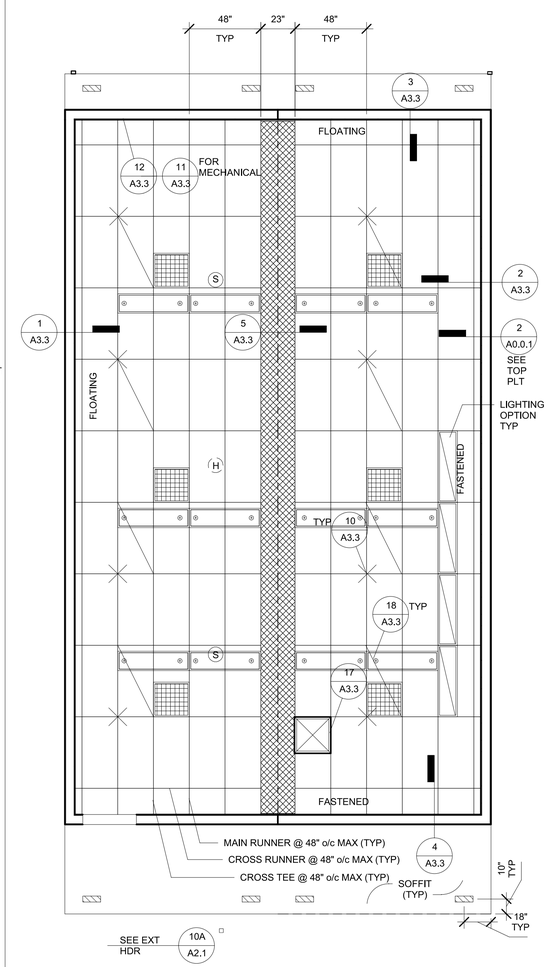

SPLAY WIRE MUST BE ON 8x12 GRID MAX
NOTE: SEE10 ,14 / 15 / A3.3
FOR TYP WIRE BRACE CONNECTION
SEE A3.2.1 FOR CLG NOTES

1 *1/4" = 1'-0"*
24x40 RCP(A)

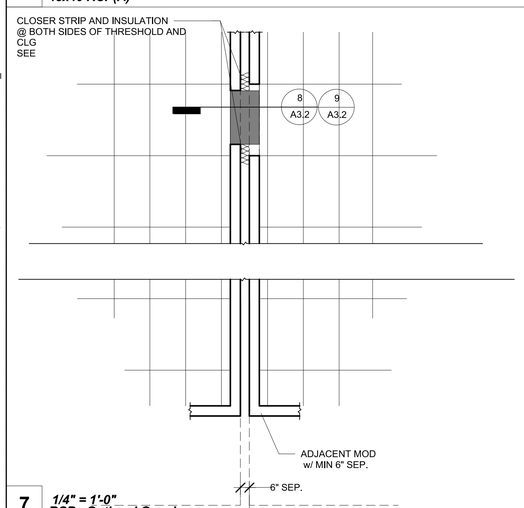

7 *1/4" = 1'-0"*
RCP - Optional Opening

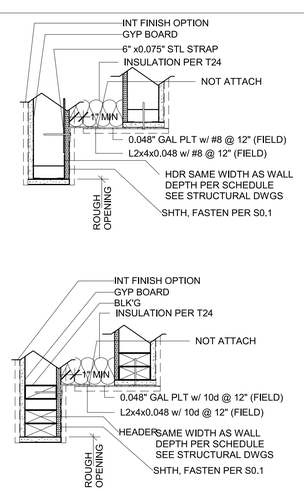

5 *1/4" = 1'-0"*
T-Bar Sched

ARMSTRONG #:
PA-041

MAIN RUNNER 7301
4' CROSS T #: XL7341
2' CROSS T #: XL7328

STANDARD 7/8" WALL ANGLE CLIP w/ BERC-2 CLIP (ICC #ESR-1308)
2" WALL ANGLE: 7810 (OPTIONAL)

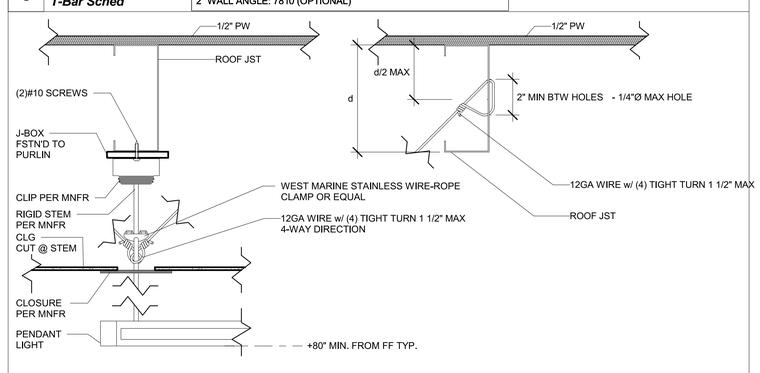

6 *3" = 1'-0"*
Section - Pendant Mounting Detail

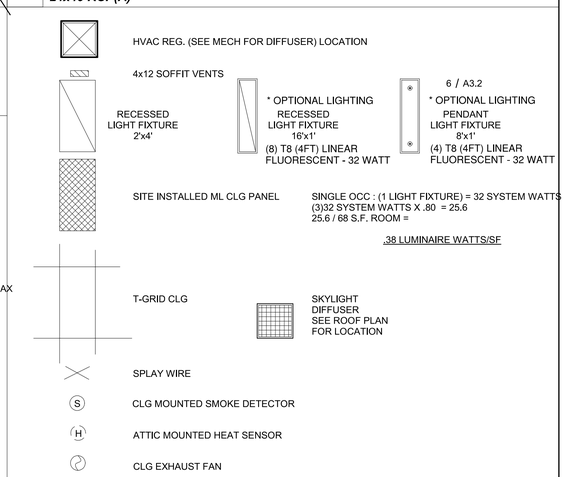

4 *1/4" = 1'-0"*
RCP Legend

IDENTIFICATION STAMP
DIV. OF THE STATE ARCHITECT
APP: 01-119031 INC:
REVIEWED FOR
SS ☑ FLS ☑ ACS ☑
DATE: 10/22/2020

PROFESSIONAL STAMP

REGISTERED PROFESSIONAL ENGINEER MANNY D. FRANCO C-43804 STRUCTURAL STATE OF CALIFORNIA

12/19/2017

THE PLANS, IDEAS & DESIGNS SHOWN ON THESE DRAWINGS ARE THE PROPERTY OF R&S TAVARES ASSOCIATES, INC. DEVISED SOLELY FOR THIS CONTRACT. THESE PLANS SHALL NOT BE USED, IN WHOLE OR IN PART, FOR ANY PURPOSE FOR WHICH THEY WERE NOT INTENDED WITHOUT THE EXPRESS WRITTEN CONSENT OF R&S TAVARES ASSOCIATES, INC. ©

CLIENT

CLASS LEASING LLC
1221 Harley Knox Boulevard
Perris, CA 92571

ORIGINAL PC STATE AGENCY APPROVAL
FILE NUMBER: PC-128
IDENTIFICATION STAMP
DIVISION OF THE STATE ARCHITECT
04 - 116504 INCR: 0
AC RM FLS EA SSR KER
DATE 07/19/2018

PROJECT TITLE
24' x 40'
EXPANDABLE TO
120' x 40'

PRE-CHECK (PC) DOCUMENT
Code: [2016] CBC
A separate project application for construction is required.

PROJECT SPECIFIC STATE AGENCY APPROVAL

Revision Schedule

#	Description	Date

SHEET TITLE
RCP

PROJECT NUMBER
17016A

DRAWN BY
rMc/SC

CHECKED BY
JA/RT

DATE
2017/06/05

SHEET NO.
A3.2

SHEET OF SHEETS

1/4/2018 12:17:26 PM C:\Users\Lee\Documents\17016 - Aries, 24x40 PC - MainFile - Low Seismic_Lee.rvt

1. CEILING SYSTEM GENERAL NOTES:

1.01 Ceiling system components shall comply with ASTM C635-07 and Section 5.1 of ASTM E580-10a.

1.02 The ceiling grid system must be rated heavy duty as defined by ASTM C635-08.

1.03 Ceiling systems. The following ceiling system(s) is/are part of the scope of this project: ***[For each system used, the RDP shall indicate in the construction documents, the information that follows]***

Manufacturer's Name ARMSTRONG.
Product Evaluation Report Type and Number PA-041.
Manufacturer's Model Number - main runner 7301. (SEE A3.2)
Manufacturer's catalog number - cross runner 4' CROSS T #: XL7341.
2' CROSS T #: XL7328

1.04 Seismic Wall Clip: ***[RDP to specify if used]***
STANDARD 7/8" WALL ANGLE CLIP w/ BERC-2 CLIP (ICC #ESR-1308)
Manufacturer's Model 2" WALL ANGLE: 7810 (OPTIONAL)

1.05 Ceiling panels shall not support any light fixtures, air terminals or devices.

1.06 For ceiling installations utilizing acoustical tile panels of mineral or glass fiber, it is not mandatory to provide ¾" clearance between the acoustical tile panels and the wall on the sides of the ceiling which are free to slip. For all other ceiling panel types, provide ¾" clearance between the ceiling panel and the wall on the sides of the ceiling free to slip.

2. MATERIALS:

2.01 Ceiling wire shall be Class 1 zinc coated (galvanized) carbon steel conforming to ASTM A641-09a. Wire shall be #12 gage (0.106" diameter) with soft temper and minimum tensile strength = 70 ksi.

2.02 Galvanized sheet steel (including that used for metal stud and track compression struts/post) shall conform to ASTM A653-11, or other equivalent sheet steel listed in Section A2.1 of the North American Specification for the Design of Cold-Formed Steel Structural Members 2007, including supplement 2 dated 2010 (AISI S100-07/S2-10). Material 43 mil (18 gage) and lighter shall have minimum yield strength of 33 ksi. Material 54 mil (16 gage) and heavier shall have a minimum yield strength of 50 ksi.

2.03 Electrical metallic tube (EMT) shall be ANSI C80.3/UL 797 carbon steel with G90 galvanizing. EMT shall have minimum yield strength (Fy) of 30 ksi and minimum ultimate strength (Fu) of 48 ksi.

Basis Document: DSA IR 25-2.13			Sheet No:
Sheet Title: Ceiling Notes	rev.	09-21-15	1.00

3. ATTACHMENT OF HANGER AND BRACING WIRES:

3.01 Separate all ceiling hanger and bracing wires at least six (6) inches from all unbraced ducts, pipes, conduit, etc.

3.02 Hanger and bracing wires shall not attach to or bend around obstructions including but not limited to: piping, ductwork, conduit and equipment.

3.03 Hanger wires that are more than one (horizontal) in six (vertical) out of plumb shall have counter-sloping wires.

3.04 Slack safety wires shall be considered hanger wires for installation and testing requirements.

3.05 Hanger and bracing wire anchorage to the structure shall be installed in such a manner that the direction of the anchorage aligns closely with the direction of the wire. (e.g. bracing wire ceiling clips must be bent as shown in the details and rotated as required to align closely with the direction of the wire, screw eyes in wood must be installed so they align closely with the direction of the wire, etc.)

4. FASTENERS AND WELDING:

4.01 Sheet metal screws shall comply with ASTM C1513-10, ASME B18.6.4-89 (R2005). Penetration of screws through joined material shall not be less than three exposed threads.

4.02 Expansion anchors shall be not applicable.

4.03 Power-Actuated Fasteners shall be not applicable.

4.04 If not otherwise specified in the evaluation report, power-actuated fasteners installed in steel shall be installed so the entire pointed end of the fastener is driven through the steel member.

4.05 Power-actuated fasteners in concrete are not permitted for bracing wires.

4.06 Concrete reinforcement and prestressing tendons shall be located by non-destructive means prior to installing post - installed anchor.

4.07 Welding shall be in accordance with AWS D1.3 using E60XX series electrodes.

5. TESTING: All field testing must be performed in the presence of the project inspector.

5.01 Post-installed anchors in concrete used to support hanger wires shall be tested at a frequency of 10 percent. Power actuated fasteners in concrete shall be field tested for 200 lbs. in tension. All other post-installed anchors in concrete shall be tested in accordance with CBC Section 1913A.7.

5.02 Post-installed anchors in concrete used to attach bracing wires shall be tested at a frequency of 50 percent in accordance with CBC Section 1913A.7.

Basis Document: DSA IR 25-2.13			Sheet No:
Sheet Title: Ceiling Notes	rev.	09-21-15	1.01

6. LIGHT FIXTURES:

6.01 All light fixtures shall be positively attached to the ceiling suspension systems by mechanical means to resist a horizontal force equal to the weight of the fixture. A minimum of two screws or approved fasteners are required at each light fixture, per ASTM E580, Section 5.3.1.

6.02 Surface-mounted light fixtures shall be attached to the main runner with at least two positive clamping devices. The clamping device shall completely surround the supporting ceiling runner and be made of steel with a minimum thickness of #14 gage. Rotational spring catches do not comply. A #12 gage slack safety wire shall be connected from each clamping device to the structure above. Provide additional supports when light fixtures are eight (8) feet or longer or exceed 56 lb. Maximum spacing between supports shall not exceed eight (8) feet.

6.03 Light fixtures weighing less than or equal to 10 lb. shall have a minimum of one (1) #12 gage slack safety wire connected from the fixture housing to the structure above.

6.04 Light fixtures weighing less than or equal to 10 lb. shall have a minimum of one (1) #12 gage slack safety wire connected from the fixture housing to the structure above.

6.05 Light fixtures weighing greater than 10 lb. but less than or equal to 56 lbs. may be supported directly on the ceiling runners, but they shall have a minimum of two (2) #12 gage slack safety wires connected from the fixture housing at diagonal corners to the structure above.

Exception: All light fixtures greater than two by four feet weighing less than 56 lbs. shall have a #12 gage slack safety wire at each corner.

6.06 All Light fixtures weighing greater than 56 lb. shall be independently supported by not less than four (4) taut #12 gage hanger wires (one at each corner) attached from the fixture housing to the structure above or other approved hangers. The four (4) taut #12 gage wires or other approved hangers, including their attachment to the structure above, shall be capable of supporting four (4) times the weight of the fixture.

7. SERVICES WITHIN THE CEILING:

7.01 All flexible sprinkler hose fitting mounting brackets, ceiling-mounted air terminals or other services shall be positively attached to the ceiling suspension systems by mechanical means. Screws or approved fasteners are required. A minimum of two attachments are required at each component.

7.02 Ceiling-mounted air terminals or other services weighing less than or equal to 20 lb. shall have one (1) #12 gage slack safety wire attached from the terminal or service to the structure above.

7.03 Flexible sprinkler hose fittings, ceiling-mounted air terminals or other services weighing more than 20 lb. but less than or equal to 56 lb. shall have two (2) #12 gage slack safety wires (at diagonal corners) connected from the terminal or service to the structure above.

7.04 Flexible sprinkler hose fittings, ceiling-mounted air terminals or other services weighing more than 56 lb. shall be supported directly from the structure above by not less than four (4) taut #12 gage hanger wires attached from the terminal or service to the structure above or other approved hangers.

Basis Document: DSA IR 25-2.13			Sheet No:
Sheet Title: Ceiling Notes	rev.	09-21-15	1.02

8. OTHER DEVICES WITHIN THE CEILING:

8.01 All lightweight miscellaneous devices, such as strobe lights, occupancy sensors, speakers, exit signs, etc., shall be attached to the ceiling grid. In addition, devices weighing more than 10 lbs. shall have a #12 gage slack safety wire anchored to the structure above. Devices weighing more than 20 lb. shall be supported independently from the structure above.

Basis Document: DSA IR 25-2.13			Sheet No:
Sheet Title: Ceiling Notes	rev.	09-21-15	1.03

IDENTIFICATION STAMP
DIV. OF THE STATE ARCHITECT
APP: 01-119031 INC:
REVIEWED FOR
SS ☑ FLS ☑ ACS ☑
DATE: 10/22/2020

PROFESSIONAL STAMP

REGISTERED PROFESSIONAL ENGINEER
MANNY D. FRISHER
No. S3380
STRUCTURAL
STATE OF CALIFORNIA

12/19/2017

THE PLANS, IDEAS & DESIGNS SHOWN ON THESE DRAWINGS ARE THE PROPERTY OF R&S TAVARES ASSOCIATES, INC. DEVISED SOLELY FOR THIS CONTRACT. THESE PLANS SHALL NOT BE USED, IN WHOLE OR IN PART, FOR ANY PURPOSE FOR WHICH THEY WERE NOT INTENDED WITHOUT THE EXPRESS WRITTEN CONSENT OF R&S TAVARES ASSOCIATES, INC. ©

CLIENT

CLASS LEASING LLC
1221 Harley Knox Boulevard
Perris, CA 92571

ORIGINAL PC STATE AGENCY APPROVAL

FILE NUMBER: PC-128
IDENTIFICATION STAMP
DIVISION OF THE STATE ARCHITECT
04 - 116504 INCR: 0
AC RM FLS EA SSR KER
DATE 07/19/2018

PROJECT TITLE

24' x 40'
EXPANDABLE TO
120' x 40'

PRE-CHECK (PC) DOCUMENT
Code: [2016] CBC
A separate project application for construction is required.

PROJECT SPECIFIC STATE AGENCY APPROVAL

Revision Schedule

#	Description	Date

SHEET TITLE
CEILING NOTES

PROJECT NUMBER
17016A

DRAWN BY
rMc/SC

CHECKED BY
JA/RT

DATE
2017/06/05

SHEET NO.
A3.2.1

SHEET OF SHEETS

12/18/2017 3:37:36 PM C:\Users\Sarah\Documents\17016 - Aries, 24x40 PC - MainFile - Low Seismic_Sarah.rvt

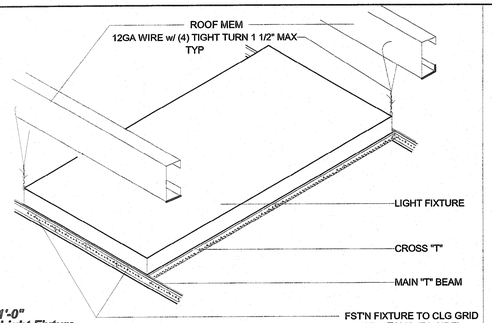

18 1" = 1'-0"
ISO - Light Fixture

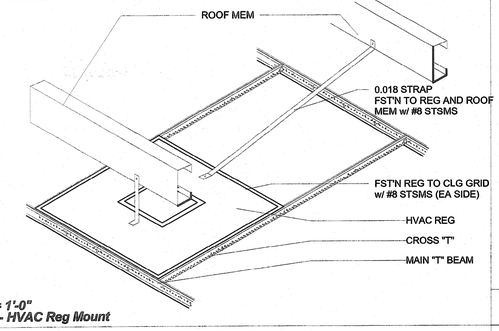

17 1" = 1'-0"
ISO - HVAC Reg Mount

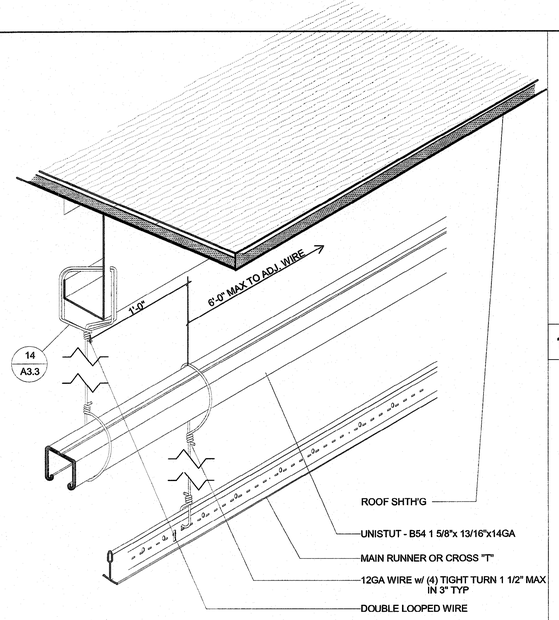

12 3" = 1'-0"
ISO - Trapeze Condition

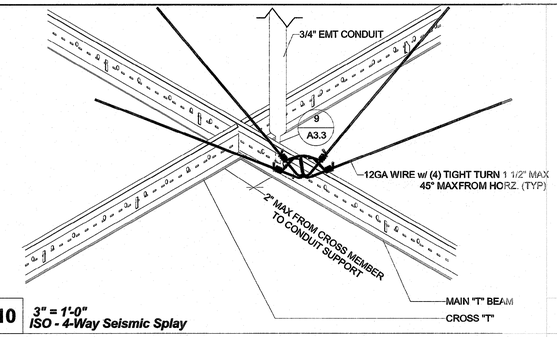

10 3" = 1'-0"
ISO - 4-Way Seismic Splay

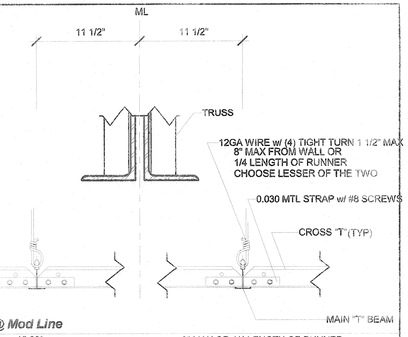

5 3" = 1'-0"
Section - "T" Grid @ Mod Line

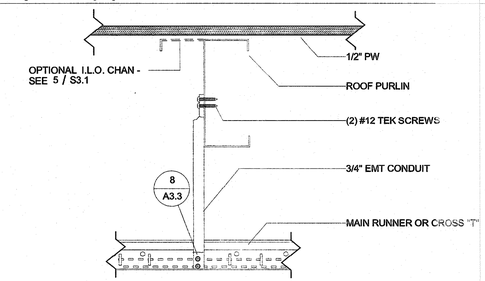

9 3" = 1'-0"
Elevation - Compression Strut

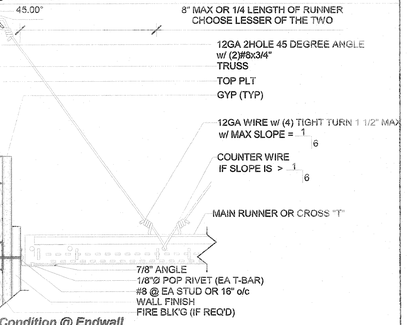

4 3" = 1'-0"
Section - Fastened Condition @ Endwall

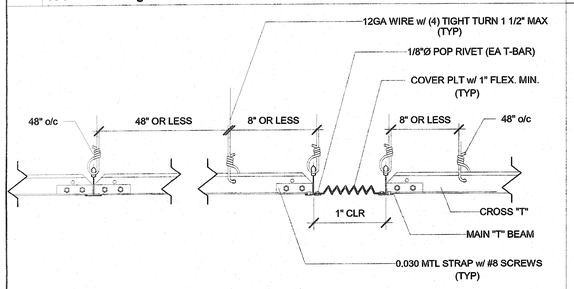

16 3" = 1'-0"
Section - "T" Grid @ Mod Line

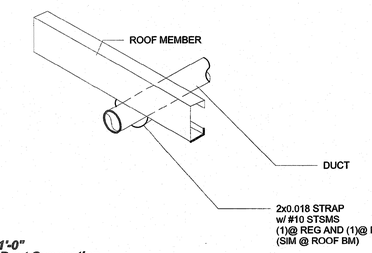

11 1" = 1'-0"
ISO - Duct Connection

NOTE:
CRIMP CONDUIT AND ATTACH TO MAIN RUNNER WITHIN 2" OF CROSS RUNNER

CONDUIT MAY BE CRIMPED AND ATTACHED ON EITHER SIDE OF "T" BAR PER CONDITION AND LOCATION

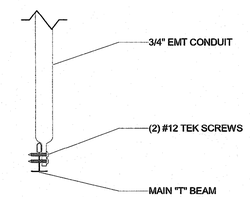

8 3" = 1'-0"
Section - Compression Strut

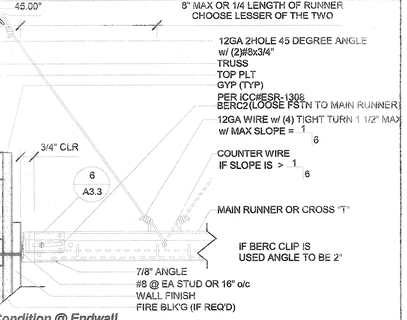

3 3" = 1'-0"
Section - Floating Condition @ Endwall

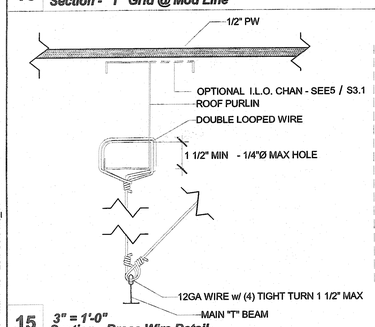

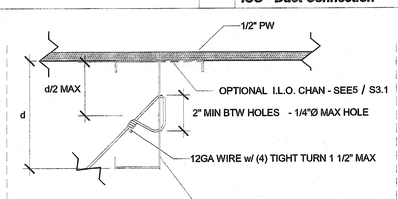

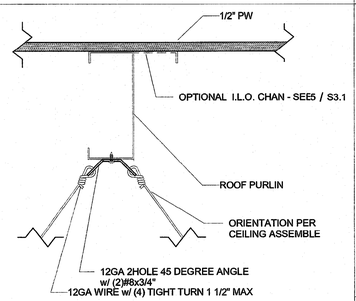

15 3" = 1'-0"
Section - Brace Wire Detail

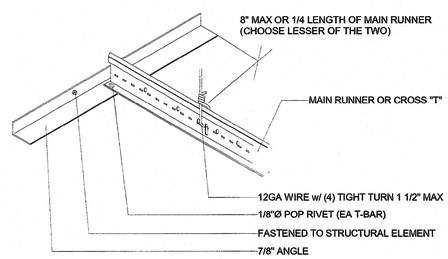

7 3" = 1'-0"
Fixed Condition w/ 2" Angle

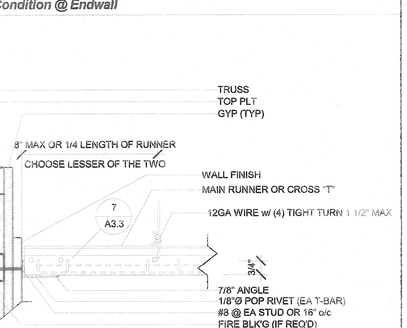

2 3" = 1'-0"
Section - Fastened Condition @ Sidewall

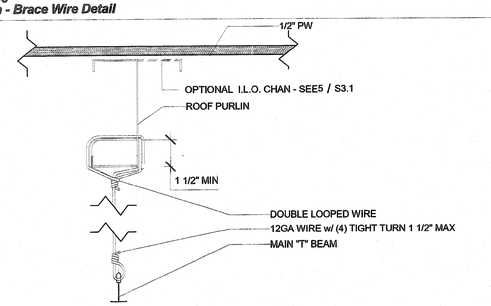

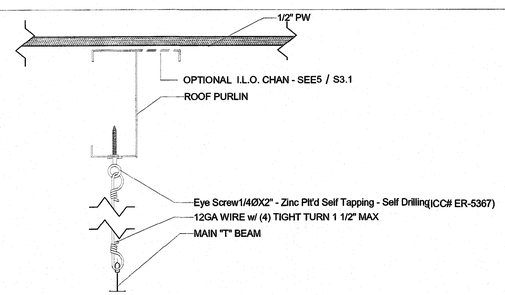

14 3" = 1'-0"
Section - Hanger Wire Detail

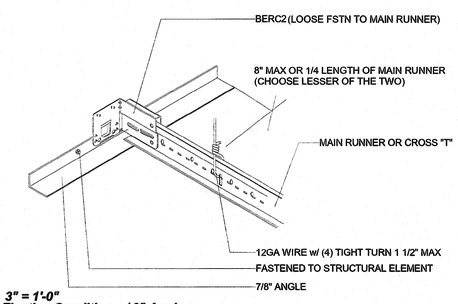

6 3" = 1'-0"
Floating Condition w/ 2" Angle

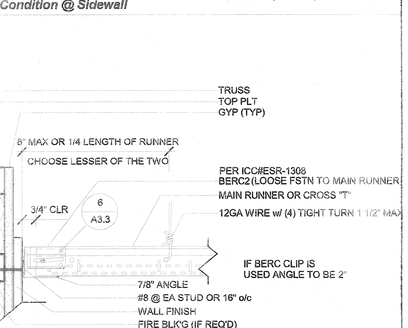

1 3" = 1'-0"
Section - Floating Condition @ Sidewall

IDENTIFICATION STAMP
DIV. OF THE STATE ARCHITECT
APP: 01-119031 INC:
REVIEWED FOR
SS ☑ FLS ☑ ACS ☑
DATE: 10/22/2020

PROFESSIONAL STAMP

12/19/2017

THE PLANS, IDEAS & DESIGNS SHOWN ON THESE DRAWINGS ARE THE PROPERTY OF R&S TAVARES ASSOCIATES, INC. DEVISED SOLELY FOR THIS CONTRACT. THESE PLANS SHALL NOT BE USED, IN WHOLE OR IN PART, FOR ANY PURPOSE FOR WHICH THEY WERE NOT INTENDED WITHOUT THE EXPRESS WRITTEN CONSENT OF R&S TAVARES ASSOCIATES, INC. ©

CLIENT
CLASS LEASING LLC
1221 Harley Knox Boulevard
Perris, CA 92571

ORIGINAL PC STATE AGENCY APPROVAL
FILE NUMBER: PC-128
IDENTIFICATION STAMP
DIVISION OF THE STATE ARCHITECT
04 - 116504 INCR: 0
AC RM FLS EA SSR KER
DATE 07/19/2018

PROJECT TITLE
24' x 40'
EXPANDABLE TO
120' x 40'

PRE-CHECK (PC) DOCUMENT
Code: [2016] CBC
A separate project application for construction is required.

PROJECT SPECIFIC STATE AGENCY APPROVAL

Revision Schedule

#	Description	Date

SHEET TITLE
CEILING DETAILS
(T-GRID)

PROJECT NUMBER
17016A

DRAWN BY
rMc/SC

CHECKED BY
JA/RT

DATE
2017/06/05

SHEET NO.
A3.3

SHEET OF SHEETS

12/18/2017 3:37:41 PM C:\Users\Sarah\Documents\17016 - Aries, 24x40 PC - MainFile - Low Seismic_Sarah.rvt

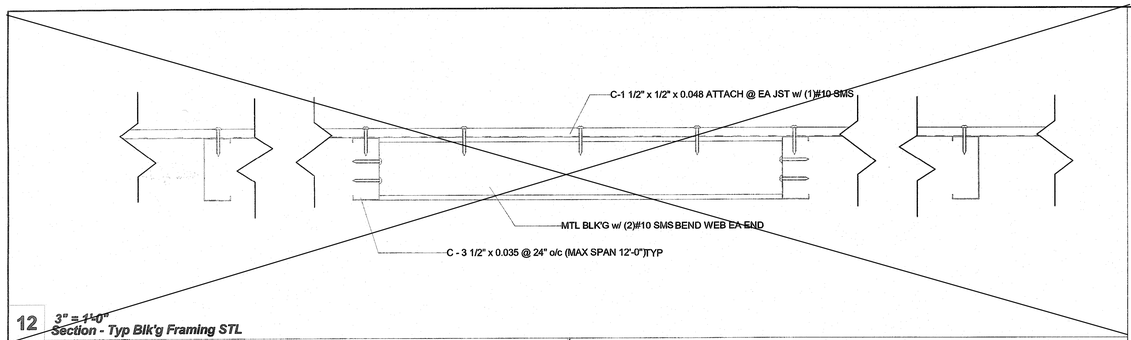

12 3" = 1'-0"
Section - Typ Blk'g Framing STL

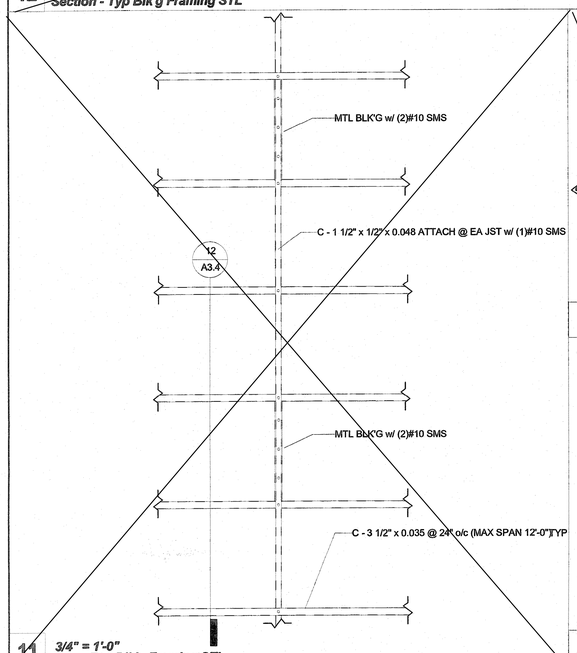

11 3/4" = 1'-0"
Plan - Typ Blk'g Framing STL

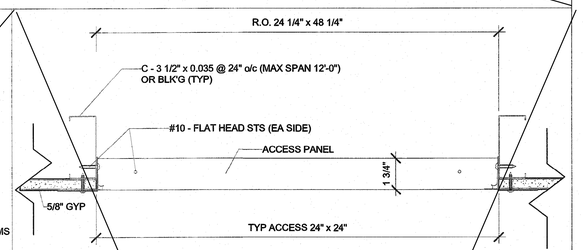

9 3" = 1'-0"
Section @ Gyp Board Ceiling @ Access STL

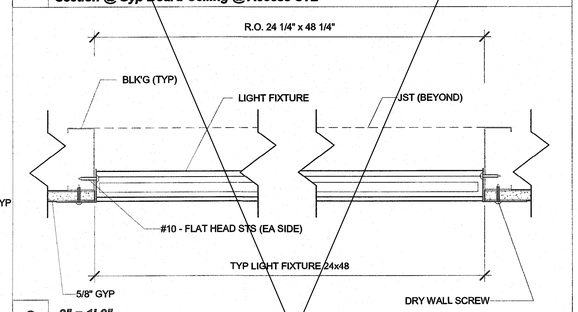

8 3" = 1'-0"
Section - Recessed Lighting Fixture Conn STL

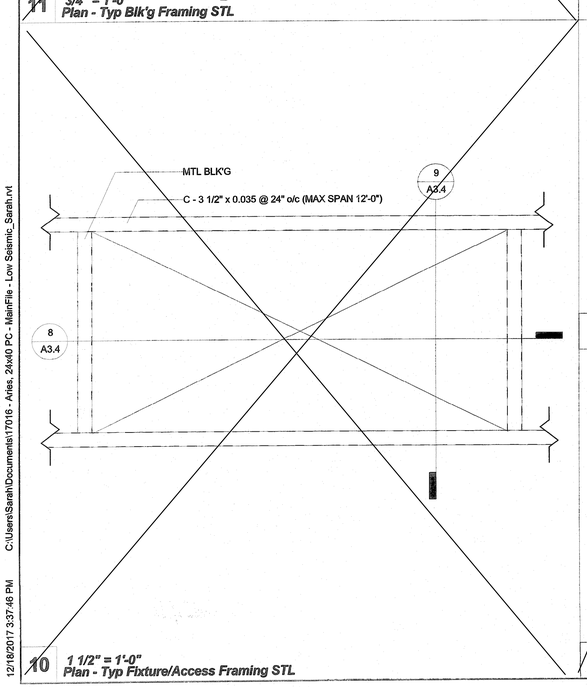

10 1 1/2" = 1'-0"
Plan - Typ Fixture/Access Framing STL

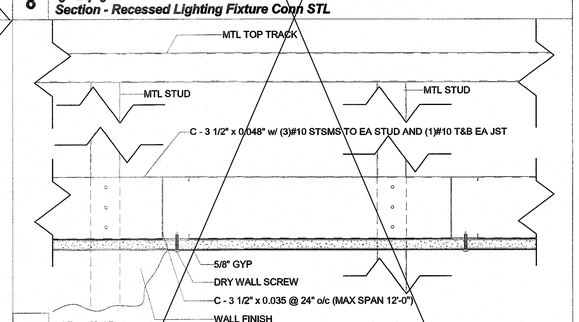

7 3" = 1'-0"
Section @ Gyp Board Ceiling Connection STL

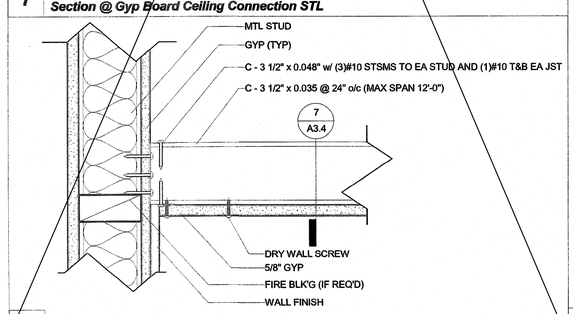

6 3" = 1'-0"
Section - Gyp Board Ceiling Connection STL

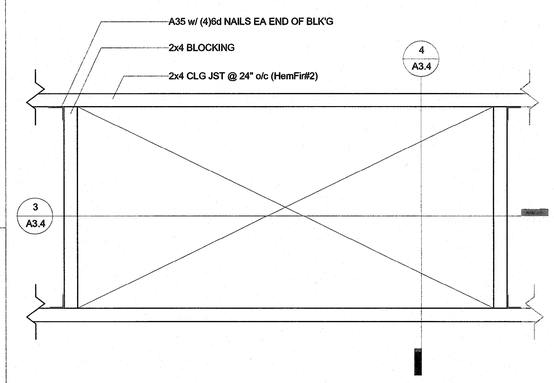

5 1 1/2" = 1'-0"
Plan - Typ Fixture/Access Framing

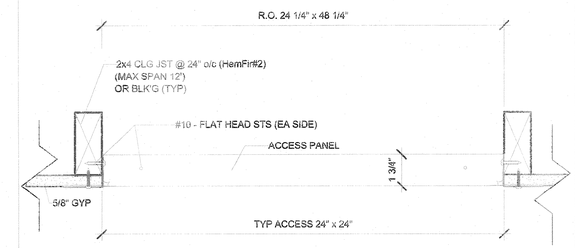

4 3" = 1'-0"
Section @ Gyp Board Ceiling @ Access

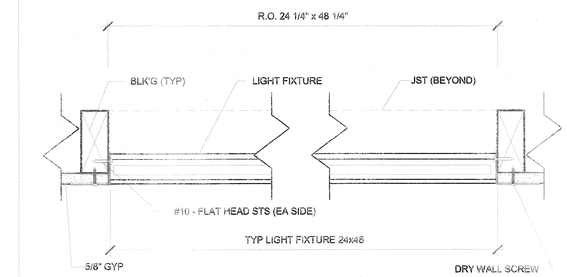

3 3" = 1'-0"
Section - Recessed Lighting Fixture Conn

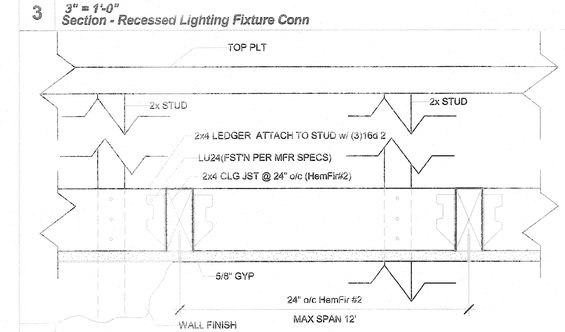

2 3" = 1'-0"
Section @ Gyp Board Ceiling Connection

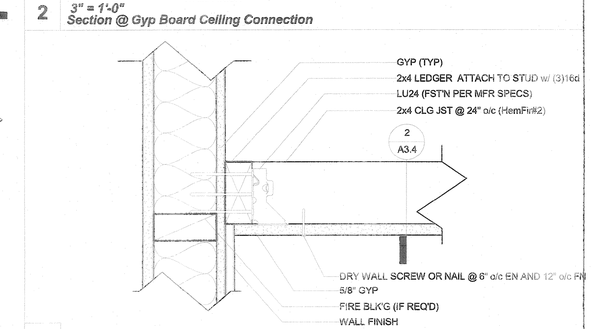

1 3" = 1'-0"
Section - Gyp Board Ceiling Connection

12/18/2017 3:37:46 PM C:\Users\Sarah\Documents\17016 - Aries, 24x40 PC - MainFile - Low Seismic_Sarah.rvt

IDENTIFICATION STAMP
DIV. OF THE STATE ARCHITECT
APP: 01-119031 INC:
REVIEWED FOR
SS ☑ FLS ☑ ACS ☑
DATE: 10/22/2020

PROFESSIONAL STAMP

REGISTERED PROFESSIONAL ENGINEER MANDY D. FRANSEN C-36350 STRUCTURAL STATE OF CALIFORNIA

12/19/2017

THE PLANS, IDEAS & DESIGNS SHOWN ON THESE DRAWINGS ARE THE PROPERTY OF R&S TAVARES ASSOCIATES, INC. DEVISED SOLELY FOR THIS CONTRACT. THESE PLANS SHALL NOT BE USED, IN WHOLE OR IN PART, FOR ANY PURPOSE FOR WHICH THEY WERE NOT INTENDED WITHOUT THE EXPRESS WRITTEN CONSENT OF R&S TAVARES ASSOCIATES, INC. ©

CLIENT

CLASS LEASING LLC
1221 Harley Knox Boulevard
Perris, CA 92571

ORIGINAL PC STATE AGENCY APPROVAL

FILE NUMBER: PC-128
IDENTIFICATION STAMP
DIVISION OF THE STATE ARCHITECT
04 - 116504 INCR: 0
AC RM FLS EA SSR KER
DATE 07/19/2018

PROJECT TITLE
24' x 40'
EXPANDABLE TO
120' x 40'

PRE-CHECK (PC) DOCUMENT
Code: [2016] CBC
A separate project application for construction is required.

PROJECT SPECIFIC STATE AGENCY APPROVAL

Revision Schedule

#	Description	Date

SHEET TITLE
CEILING DETAILS
(GYP BOARD)

PROJECT NUMBER
17016A

DRAWN BY
rMc/SC

CHECKED BY
JA/RT

DATE
2017/06/05

SHEET NO.
A3.4

SHEET OF SHEETS

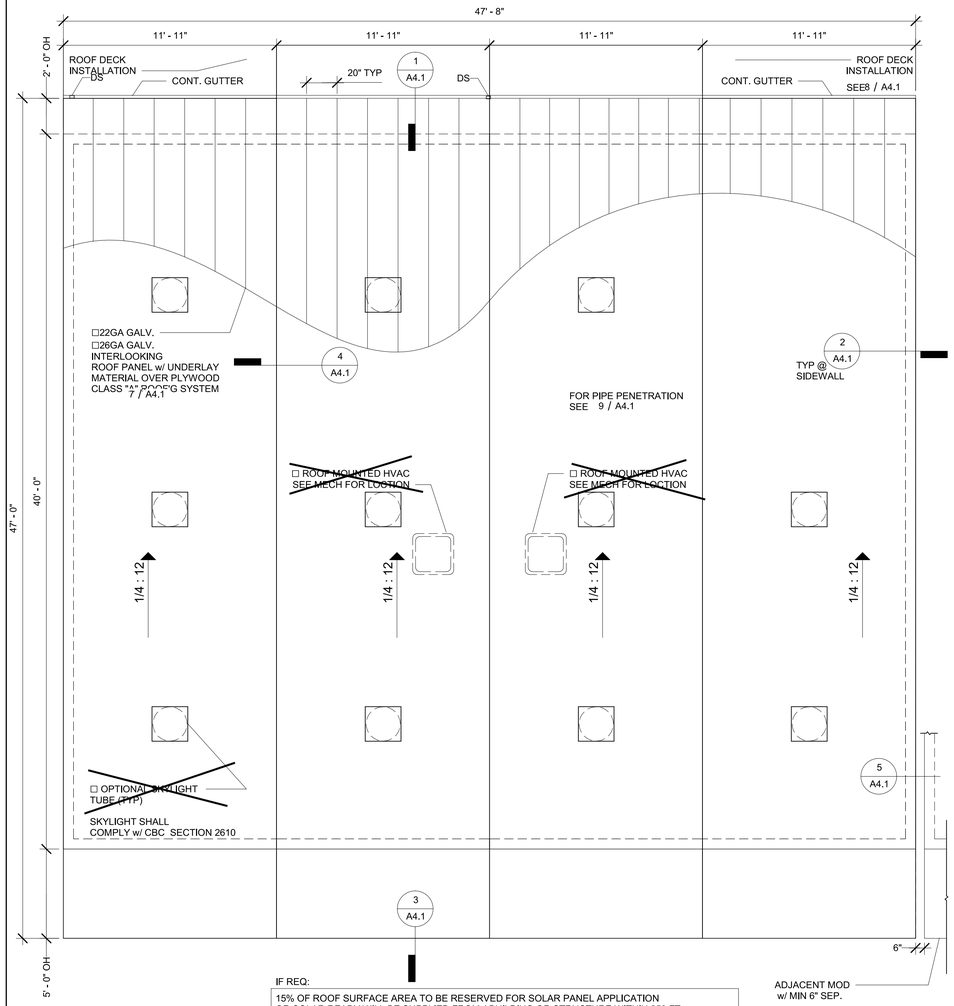

IF REQ:

15% OF ROOF SURFACE AREA TO BE RESERVED FOR SOLAR PANEL APPLICATION
OR SOLAR READY WILL BE SUPPLIED FROM ABUILDING OR STRUCTURE WITHIN 250 FT
OF PC BUILDING

ENTIRE ROOF SURFACE IS DESIGNED STRUCTURALLY TO ACCOMMODATE SOLAR PANELS = 3PSF

3 *1/4" = 1'-0"*
48x40 Roof Plan (Mt Mono)

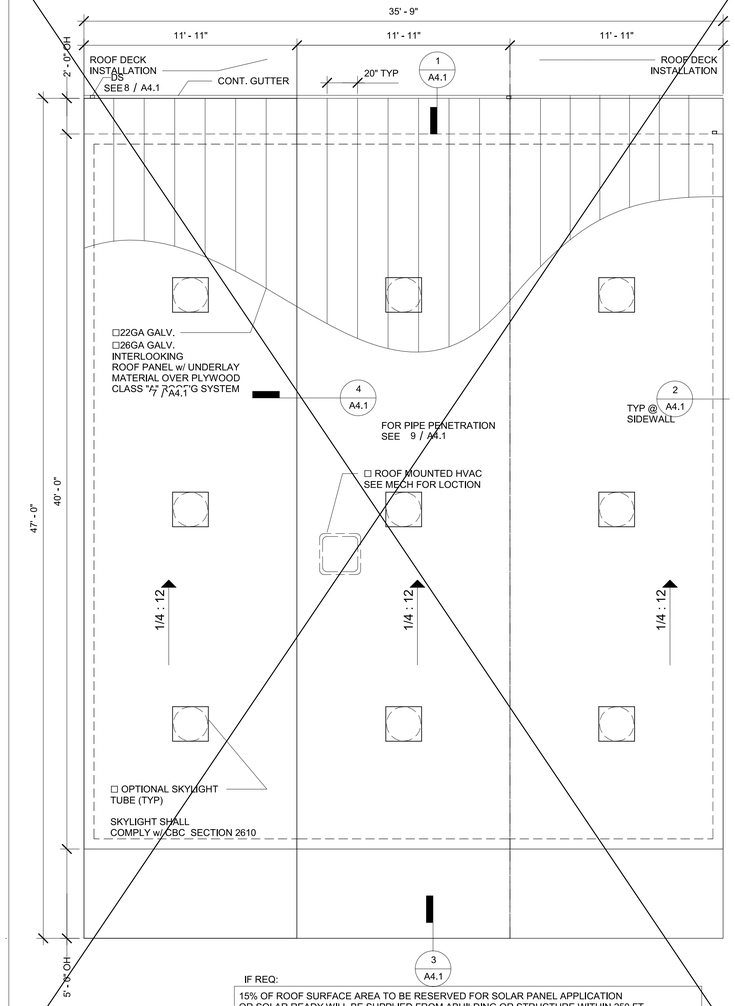

IF REQ:

15% OF ROOF SURFACE AREA TO BE RESERVED FOR SOLAR PANEL APPLICATION
OR SOLAR READY WILL BE SUPPLIED FROM ABUILDING OR STRUCTURE WITHIN 250 FT
OF PC BUILDING

ENTIRE ROOF SURFACE IS DESIGNED STRUCTURALLY TO ACCOMMODATE SOLAR PANELS = 3PSF

2 *1/4" = 1'-0"*
36x40 Roof Plan (Mlt Mono)

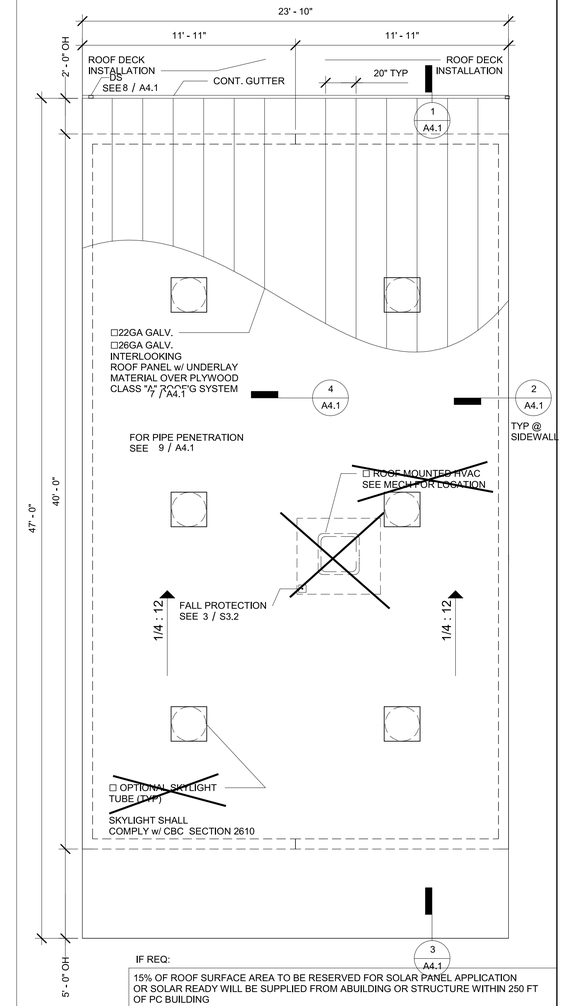

IF REQ:

15% OF ROOF SURFACE AREA TO BE RESERVED FOR SOLAR PANEL APPLICATION
OR SOLAR READY WILL BE SUPPLIED FROM ABUILDING OR STRUCTURE WITHIN 250 FT
OF PC BUILDING

ENTIRE ROOF SURFACE IS DESIGNED STRUCTURALLY TO ACCOMMODATE SOLAR
PANELS = 3PSF

1 *1/4" = 1'-0"*
24x40 Roof Plan (Mtl Mono)

NOTE: PER CBC 1015.6. - EXCEPTION, GUARDRAILS ARE NOT REQUIRED WHERE PERMANENT FALL RESTRAINT ANCHORAGE DEVICES ARE AFFIXED & SHALL BE PLACED NOT MORE THAN 10FT FROM THE ROOF EDGE.

PV AREA FOR FIRE ACCESS REQ'T (PER IR 16-8)

3.2.1 General Requirements: A PV System shall be typically considered equipment. There is typically not an occupancy group classification, building area limitation, or type of construction assignment to a PV system.
a) PV equipment supported by non-combustible framing installed in locations dedicated for building frontage used for area increases per California Building Code (CBC), Chapter 5, Section 506, shall be limited in size and may be allowed on a case by case basis. Maximum area that may be allowed for such systems shall not exceed 1/3 of the horizontal projected area of each frontage.
b) Open sided PV systems and framing that are non-combustible and without use underneath may be considered equipment and may be placed next to DSA IR 16-8 Solar Photovoltaic and Thermal
(updated 01-25-17) Systems Review and Approval Requirements Page 11 of 19 property lines. Signs may be required on or near the system prohibiting any use or storage underneath the equipment.
c) Combustible PV systems and framing and those with use underneath such as for assembly or parking, may need to comply with 2010 CBC, Table 602. These structures may include those that do and that do not have a roof underneath the PV system.
d) PV systems (both the frame and the array) shall not be placed in fire department access roads. (Per Title 24 CCR, Division 1, Chapter 1, Section 3.05 and 2010 CFC Chapter 5, Section 503.)
e) Access to a public way or safe dispersal area shall not be obstructed by the system or system framing. (CBC 1027.6 and 442.3)
f) PV systems that cover a lunch area or similar (occupant load less than 50), that are not used for assembly purposes shall be considered equipment. Playgrounds would also fall into this category regardless of total occupant load.
g) Any PV system that is installed above an assembly use (i.e. Group A-3 or A-5 occupancy classification) shall be considered an open sided building structure and all or portions of CBC provisions apply on a case by case basis. Such areas might include an outdoor amphitheater, bleacher or grandstand seating with concentrated occupant loads and heavy use.
h) Fire Department concern for the installation of roof mounted PV systems will be addressed by DSA review to the State Fire Marshal Solar Photovoltaic Installation Guideline available at:
http://osfm.fire.ca.gov/pdf/reports/solarphotovoltaicguideline.pdf
i) When a PV system, without riser framework, is installed directly on a rated roof assembly with a required classification greater than "Class C" found in CBC, Chapter 15, and f

IDENTIFICATION STAMP
DIV. OF THE STATE ARCHITECT
APP: 01-119031 INC:
REVIEWED FOR
SS ☑ FLS ☑ ACS ☑
DATE: 10/22/2020

PROFESSIONAL STAMP

REGISTERED PROFESSIONAL ENGINEER
MANAN D. FRANCIS
C-34380
STRUCTURAL
STATE OF CALIFORNIA

12/19/2017

THE PLANS, IDEAS & DESIGNS SHOWN ON THESE DRAWINGS ARE THE PROPERTY OF R&S TAVARES ASSOCIATES, INC. DEVISED SOLELY FOR THIS CONTRACT. THESE PLANS SHALL NOT BE USED, IN WHOLE OR IN PART, FOR ANY PURPOSE FOR WHICH THEY WERE NOT INTENDED WITHOUT THE EXPRESS WRITTEN CONSENT OF R&S TAVARES ASSOCIATES, INC. ©

CLIENT

CLASS LEASING LLC
1221 Harley Knox Boulevard
Perris, CA 92571

ORIGINAL PC STATE AGENCY APPROVAL
FILE NUMBER: PC-128
IDENTIFICATION STAMP
DIVISION OF THE STATE ARCHITECT
04 - 116504 INCR: 0
AC RM FLS EA SSR KER
DATE 07/19/2018

PROJECT TITLE

24' x 40' EXPANDABLE TO 120' x 40'

PRE-CHECK (PC) DOCUMENT
Code: [2016] CBC
A separate project application for construction is required.

PROJECT SPECIFIC STATE AGENCY APPROVAL

Revision Schedule

#	Description	Date

SHEET TITLE

ROOF PLAN MONO SLOPE (STANDING SEAM)

PROJECT NUMBER
17016A

DRAWN BY
rMc/SC

CHECKED BY
JA/RT

DATE
2017/06/05

SHEET NO.
A4.0.1

SHEET OF SHEETS

1/10/2018 11:44:14 AM C:\Users\Lee\Documents\17016 - Aries, 24x40 PC - MainFile - Low Seismic_Lee.rvt

Metal Inside Closure

DESCRIPTION						PRICED PER EACH
PART #	MR SYSTEM	WIDTH	GAUGE	FINISH	WEIGHT EACH	PRICE
HW-426	UD & DL	1/2"	18	Galvalume®	22#	✓

Clip - 2" Siding (Low)

Note:
- Specify for SSR Systems
- Clip fasteners must be installed separately
- 1½" movement in each direction

DESCRIPTION				PRICED PER EACH
PART #	MR SYSTEM	HEIGHT	WEIGHT EACH	PRICE
HW-2102	Ultra-Dek®	2½"	50#	✓
HW-2122	Double-Lok®	2½"	50#	✓

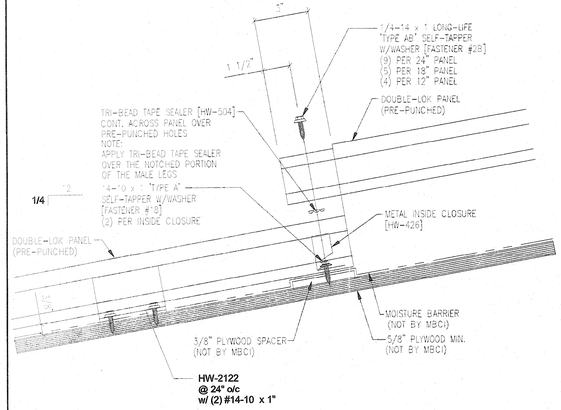

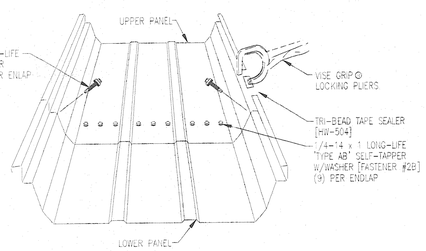

PANEL INSTALLATION SEQUENCE

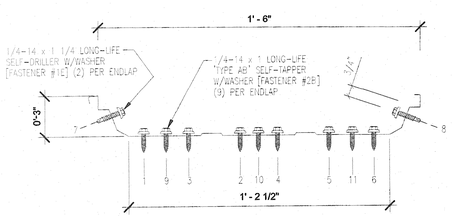

FASTENER SEQUENCE @ ENDLAP

18" DOUBLE-LOK 22GA STANDING SEAM PANEL BY MBCI

NEG		POS	
t	= 0.0299"	t	= 0.0299"
S_x	= 0.1846 IN^3	S_x	= 0.2154 IN^3
I_x	= 0.2718 IN^4	I_x	= 0.4968 IN^4
F_y	= 50 KSI	F_y	= 50 KSI

18" 26GA STANDING SEAM PANEL

NEG		POS	
t	= 0.018"	t	= 0.018"
S_x	= 0.1383 IN^3	S_x	= 0.7560 IN^3
I_x	= 0.351 IN^4	I_x	= 0.351 IN^4
F_y	= 33 KSI	F_y	= 33 KSI

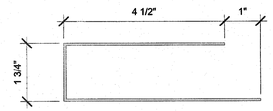

14 6" = 1'-0" **FLASHING @ ROOF HIGH SIDE**

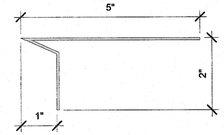

13 6" = 1'-0" **FLASHING @ ROOF LOW SIDE**

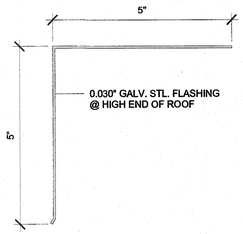

12 6" = 1'-0" **ROOF FLASHING**

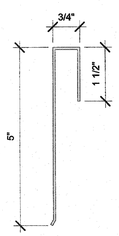

11 6" = 1'-0" **ROOF FLASHING @ SIDEWALL**

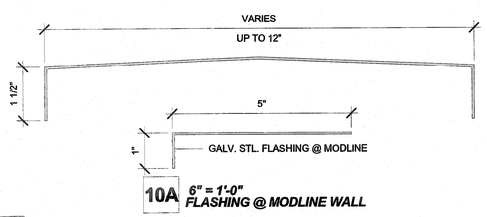

10A 6" = 1'-0" **FLASHING @ MODLINE WALL**

10 6" = 1'-0" **ROOF CAP @ MODLINE**

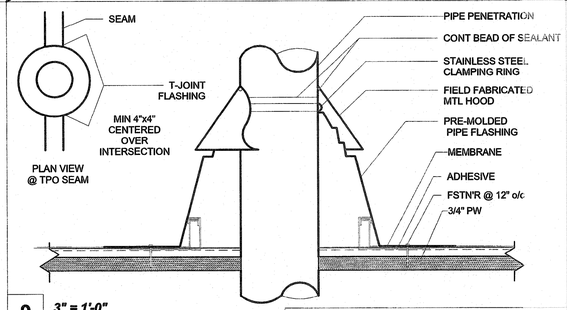

9 3" = 1'-0" **Pipe Penetration Standing Seam** | ALL FSTN'G & WATER PROOF'G/FLASHING PER MNFR SPECS

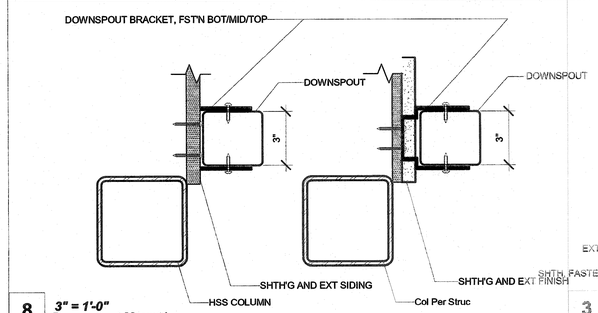

8 3" = 1'-0" **Downspout Mount1**

ROOF COVERING: (CBC SECTION 705A) 26 GA. GALV. STEEL (NON - COMBUSTIABLE) INTERLOCKED STANDING SEAM ROOF PANELS W/ NO SPACE BETWEEN ROOF PANELS AND ROOF DECKING. STANDING SEAM ROOF OVER LAYER #15 ROOF FELT (CBC 705A.2)

1

ROOF GUTTERS: (CBC SECTION 705.4) SHALL BE SCREENED WITH A CORROSION RESTISTANT NONCOMBUSTIBLE WIRE MESH WITH 1/4" (6MM) OPENINGS OR EQUAL

1

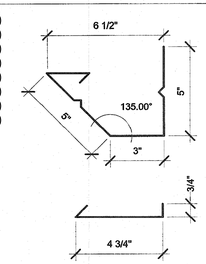

6 3" = 1'-0" **Gutter and Strap1**

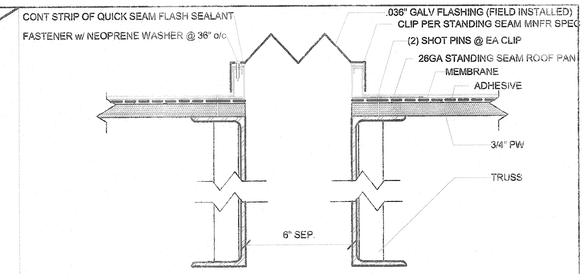

5 3" = 1'-0" **Roof @ Mateline Std'g Seam w/ 6" Sep** | ALL FSTN'G & WATER PROOF'G/FLASHING PER MNFR SPECS

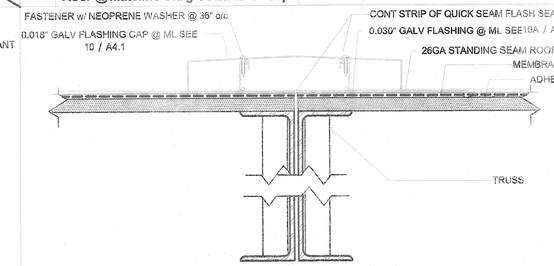

4 3" = 1'-0" **Roof @ Standing Seam Mateline** | ALL FSTN'G & WATER PROOF'G/FLASHING PER MNFR SPECS

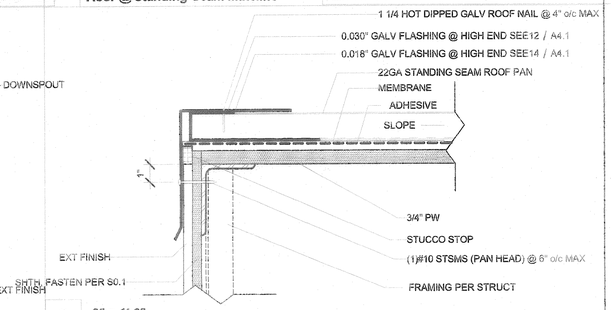

3 3" = 1'-0" **Roof @ Endwall Std'g Seam (High End)** | ALL FSTN'G & WATER PROOF'G/FLASHING PER MNFR SPECS

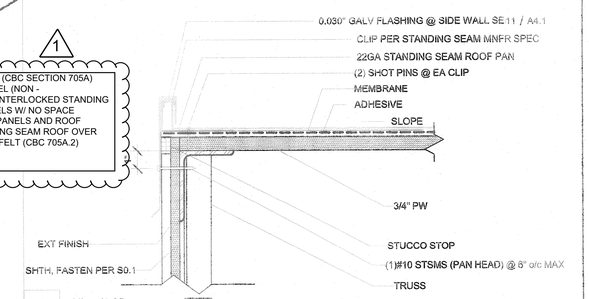

2 3" = 1'-0" **Roof @ Standing Seam Sidwall** | ALL FSTN'G & WATER PROOF'G/FLASHING PER MNFR SPECS

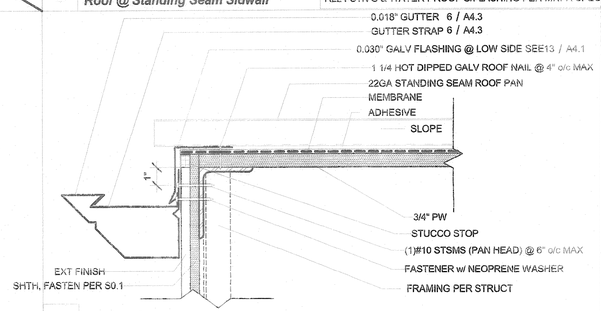

1 3" = 1'-0" **Roof @ Endwall Std'g Seam (Low End)** | ALL FSTN'G & WATER PROOF'G/FLASHING PER MNFR SPECS

IDENTIFICATION STAMP
DIV. OF THE STATE ARCHITECT
APP: 01-119031 INC:
REVIEWED FOR
SS ☑ FLS ☑ ACS ☑
DATE: 10/22/2020

PROFESSIONAL STAMP

12/19/2017

THE PLANS, IDEAS & DESIGNS SHOWN ON THESE DRAWINGS ARE THE PROPERTY OF R&S TAVARES ASSOCIATES, INC. DEVISED SOLELY FOR THIS CONTRACT. THESE PLANS SHALL NOT BE USED, IN WHOLE OR IN PART, FOR ANY PURPOSE FOR WHICH THEY WERE NOT INTENDED WITHOUT THE EXPRESS WRITTEN CONSENT OF R&S TAVARES ASSOCIATES, INC. ©

CLIENT

CLASS LEASING LLC
1221 Harley Knox Boulevard
Perris, CA 92571

ORIGINAL PC STATE AGENCY APPROVAL

FILE NUMBER: PC-128

IDENTIFICATION STAMP
DIVISION OF THE STATE ARCHITECT
04 - 116504 INCR: 0
AC RM FLS EA SSR KER
DATE 07/19/2018

PROJECT TITLE

24' x 40'
EXPANDABLE TO
120' x 40'

PRE-CHECK (PC) DOCUMENT
Code: [2016] CBC
A separate project application for construction is required.

PROJECT SPECIFIC STATE AGENCY APPROVAL

Revision Schedule

#	Description	Date

SHEET TITLE

ROOF DETAILS (STANDING SEAM)

PROJECT NUMBER 17016A

DRAWN BY rMc/SC

CHECKED BY JA/RT

DATE 2017/06/05

SHEET NO. A4.1

SHEET OF SHEETS

12/18/2017 3:37:53 PM C:\Users\Sarah\Documents\17016 - Arles, 24x40 PC - MainFile - Low Seismic_Sarah.rvt

Ext. Finish Schedule

	Finishes	Sheet	Notes
☒	SIDING OVER WD STUDS	A2.1	
☐	PLASTER OVER 1/2" OSB OR 1/2" CDX PLY w/ WD STUDS	A2.2	
☐	SIDING OVER STL STUDS	A2.3	
☐	PLASTER OVER 1/2" OSB OR 1/2" CDX PLY w/ STL STUDS	A2.4	

9 *1/4" = 1'-0"*
Ext. Finish Scedule

Fire Rating Schedule

	Rating	Sheet	Notes
☐	1 HOUR - SIDING OVER WD STUDS	A2.5	
☐	1 HOUR - PLASTER OVER 1/2" OSB OR 1/2" CDX PLY w/ WD STUDS	A2.6	
☐	1 HOUR - SIDING OVER STL STUDS	A2.7	
☐	1 HOUR - PLASTER OVER 1/2" OSB OR 1/2" CDX PLY w/ STL STUDS	A2.8	

SEE A3.0 FOR ADDITIONAL FIRE ASSEMBLY NOTES AND DETAILS

10 *1/4" = 1'-0"*
Fire Rating Scedule

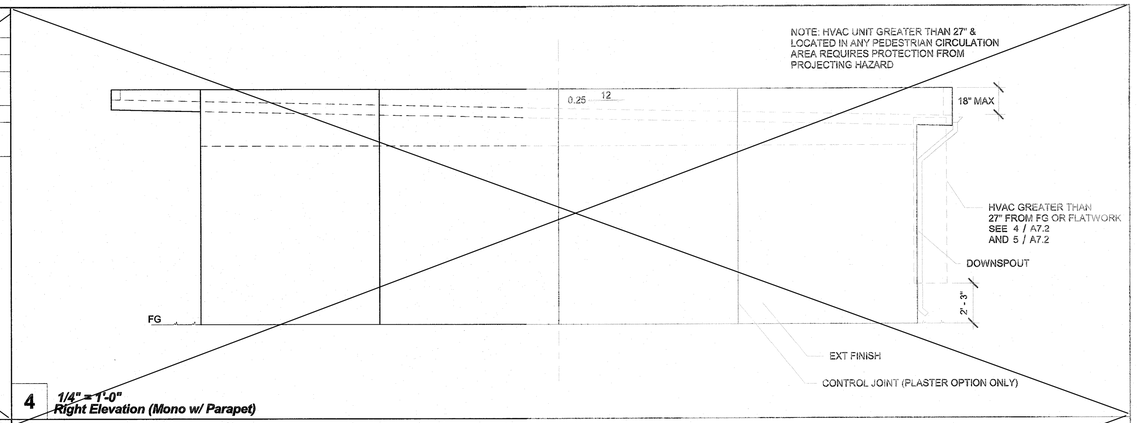

4 *1/4" = 1'-0"*
Right Elevation (Mono w/ Parapet)

SEE A0.1 FOR GENERAL NOTES

7 *3" = 1'-0"*
Notes A5.0

Wall Schedule

	Stud Size	Sheet	Notes
☒	Wood Wall Stud	S4.5	
☐	Mtl Wall Stud	S4.5	CONTINUOUS EXT R-4 INSULATION

8 *1/4" = 1'-0"*
Wall Schedule

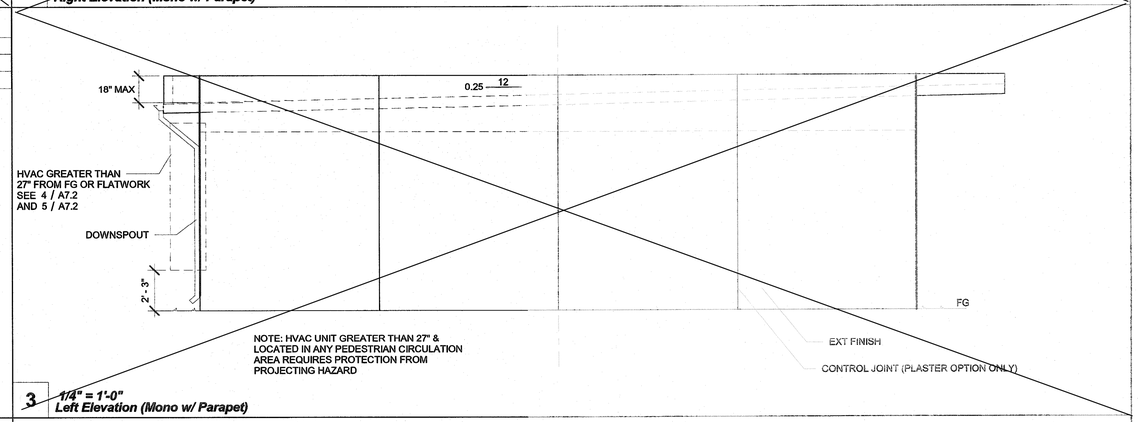

3 *1/4" = 1'-0"*
Left Elevation (Mono w/ Parapet)

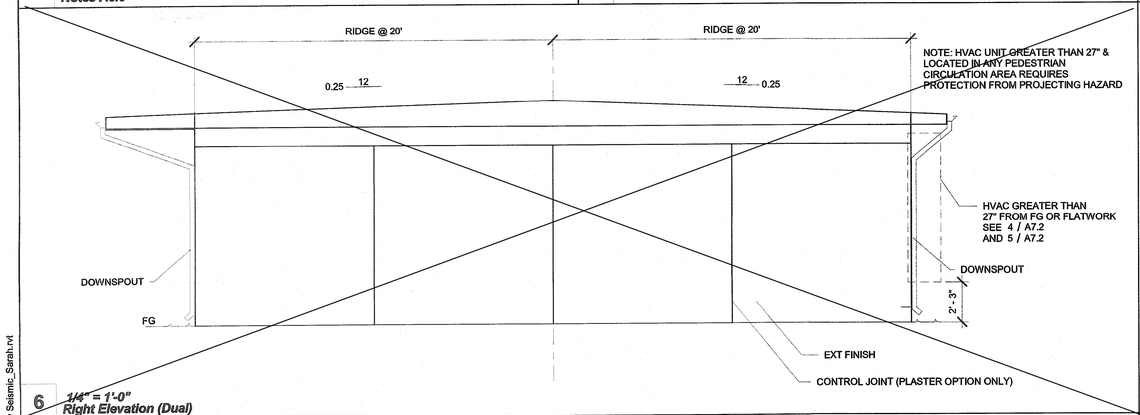

6 *1/4" = 1'-0"*
Right Elevation (Dual)

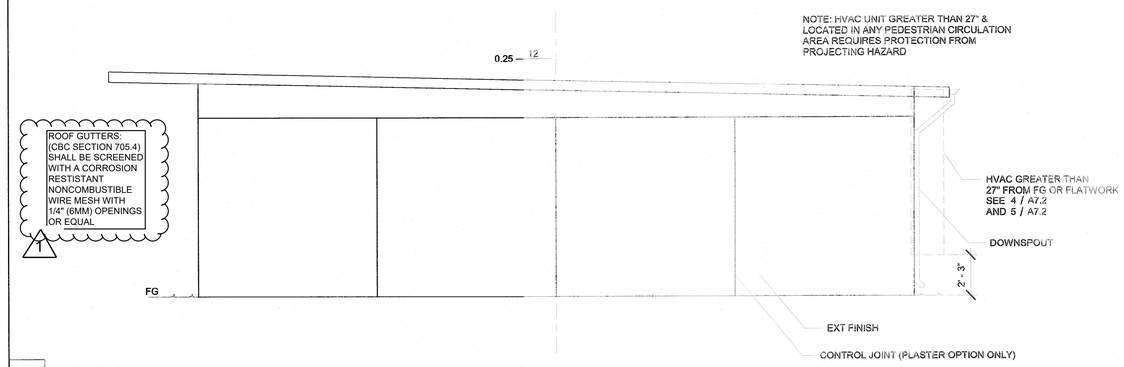

2 *1/4" = 1'-0"*
Right Elevation (Mono)

SEE ALT SHEETS FOR FLOOR CONFIGURATION

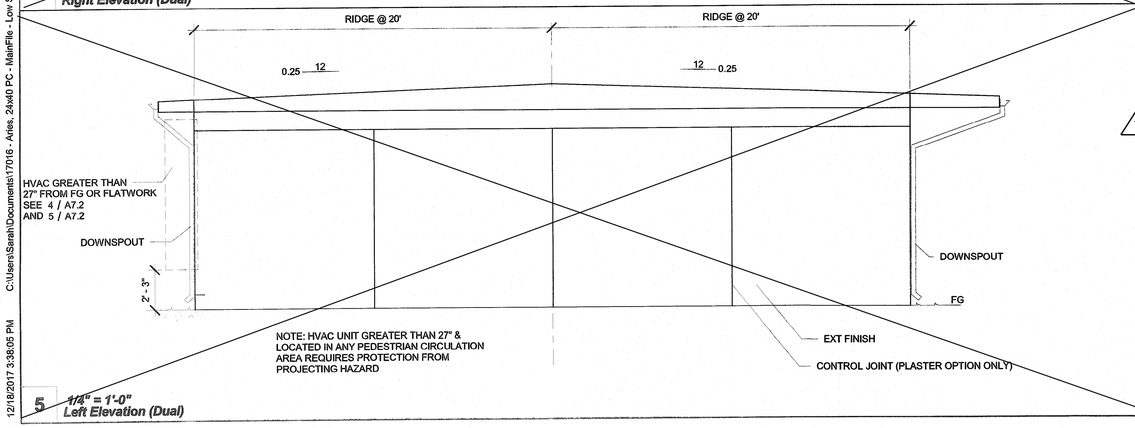

5 *1/4" = 1'-0"*
Left Elevation (Dual)

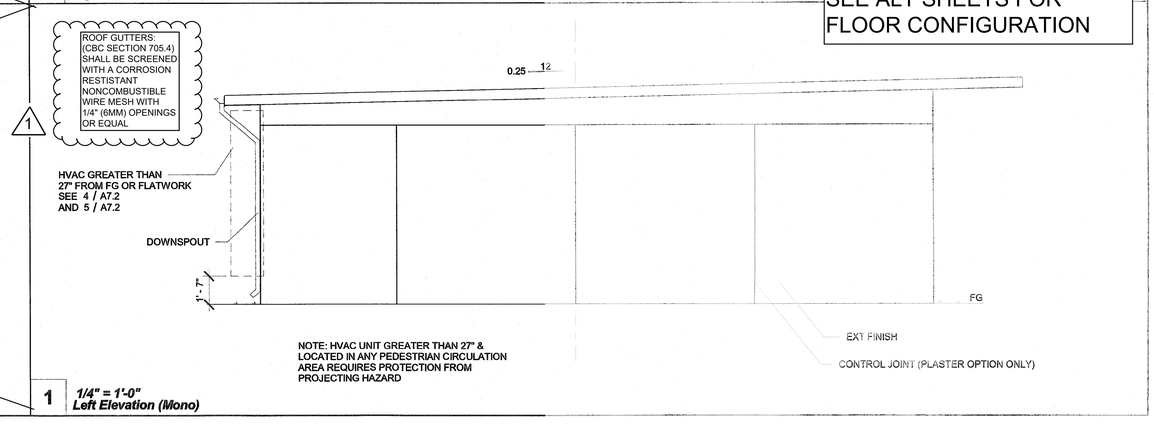

1 *1/4" = 1'-0"*
Left Elevation (Mono)

IDENTIFICATION STAMP
DIV. OF THE STATE ARCHITECT
APP: 01-119031 INC: A
REVIEWED FOR
SS ☑ FLS ☑ ACS ☑
DATE: 10/22/2020

PROFESSIONAL STAMP

REGISTERED PROFESSIONAL ENGINEER MANNY D. FARAH No. 15000 STRUCTURAL STATE OF CALIFORNIA

12/19/2017

THE PLANS, IDEAS & DESIGNS SHOWN ON THESE DRAWINGS ARE THE PROPERTY OF R&S TAVARES ASSOCIATES, INC. DEVISED SOLELY FOR THIS CONTRACT. THESE PLANS SHALL NOT BE USED, IN WHOLE OR IN PART, FOR ANY PURPOSE FOR WHICH THEY WERE NOT INTENDED WITHOUT THE EXPRESS WRITTEN CONSENT OF R&S TAVARES ASSOCIATES, INC. ©

CLIENT

CLASS LEASING LLC
1221 Harley Knox Boulevard
Perris, CA 92571

ORIGINAL PC STATE AGENCY APPROVAL

FILE NUMBER: PC-128
IDENTIFICATION STAMP
DIVISION OF THE STATE ARCHITECT
04 - 116504 INCR: 0
AC RM FLS EA SSR KER
DATE 07/19/2018

PROJECT TITLE
24' x 40'
EXPANDABLE TO
120' x 40'

PRE-CHECK (PC) DOCUMENT
Code: [2016] CBC
A separate project application for construction is required.

PROJECT SPECIFIC STATE AGENCY APPROVAL

Revision Schedule

#	Description	Date

SHEET TITLE
SIDEWALL ELEVATION

PROJECT NUMBER
17016A

DRAWN BY
rMc/SC

CHECKED BY
JA/RT

DATE
2017/06/05

SHEET NO.
A5.0

SHEET OF SHEETS

12/18/2017 3:38:05 PM C:\Users\Sarah\Documents\17016 - Aries, 24x40 PC - MainFile - Low Seismic_Sarah.rvt

SEE ALT SHEETS FOR FLOOR CONFIGURATION

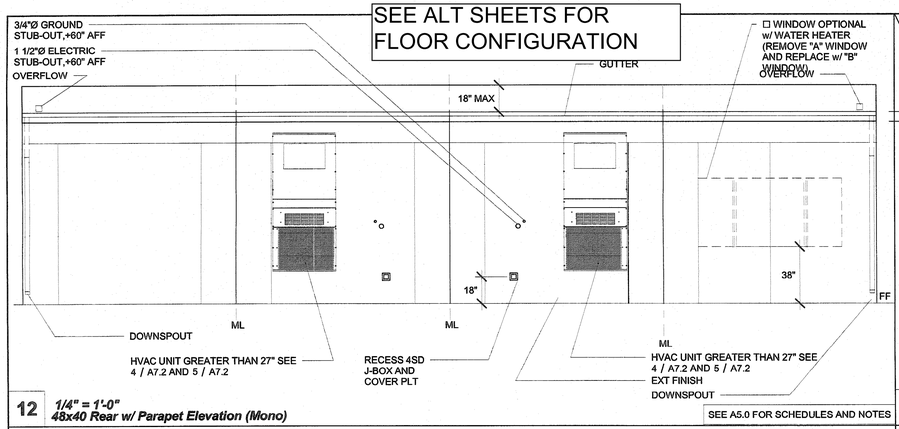

12 1/4" = 1'-0"
48x40 Rear w/ Parapet Elevation (Mono)

SEE A5.0 FOR SCHEDULES AND NOTES

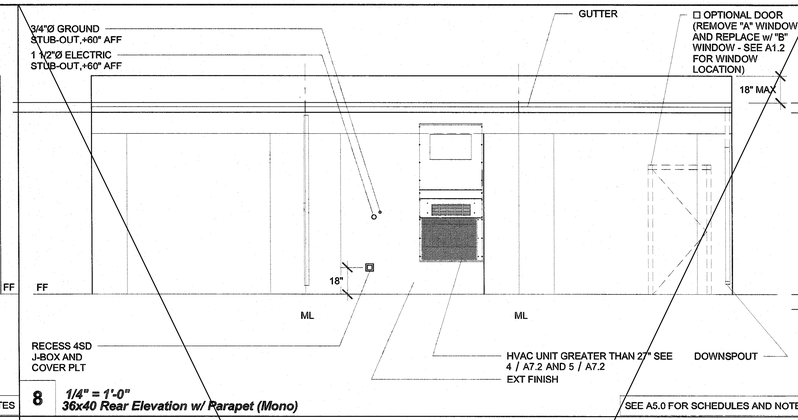

8 1/4" = 1'-0"
36x40 Rear Elevation w/ Parapet (Mono)

SEE A5.0 FOR SCHEDULES AND NOTES

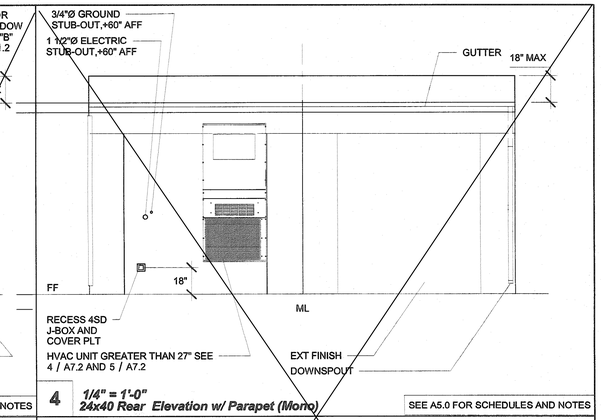

4 1/4" = 1'-0"
24x40 Rear Elevation w/ Parapet (Mono)

SEE A5.0 FOR SCHEDULES AND NOTES

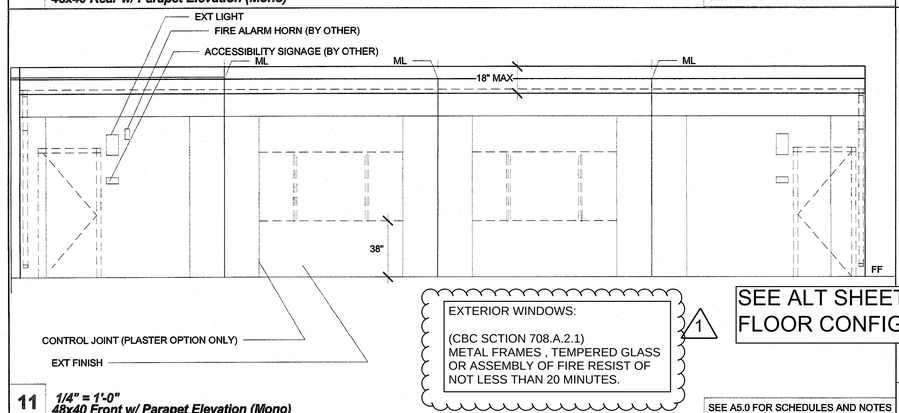

11 1/4" = 1'-0"
48x40 Front w/ Parapet Elevation (Mono)

SEE A5.0 FOR SCHEDULES AND NOTES

EXTERIOR WINDOWS:

(CBC SCTION 708.A.2.1)
METAL FRAMES , TEMPERED GLASS OR ASSEMBLY OF FIRE RESIST OF NOT LESS THAN 20 MINUTES.

1

SEE ALT SHEETS FOR FLOOR CONFIGURATION

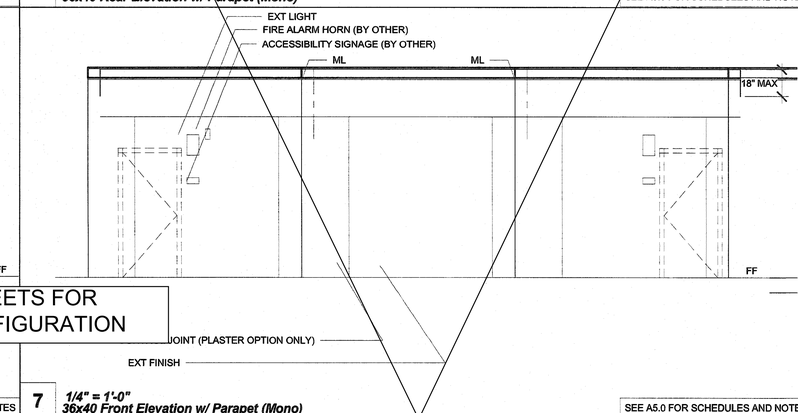

7 1/4" = 1'-0"
36x40 Front Elevation w/ Parapet (Mono)

SEE A5.0 FOR SCHEDULES AND NOTES

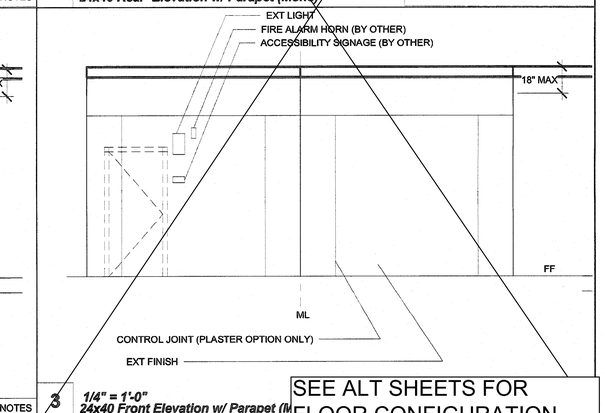

3 1/4" = 1'-0"
24x40 Front Elevation w/ Parapet (M

SEE ALT SHEETS FOR FLOOR CONFIGURATION

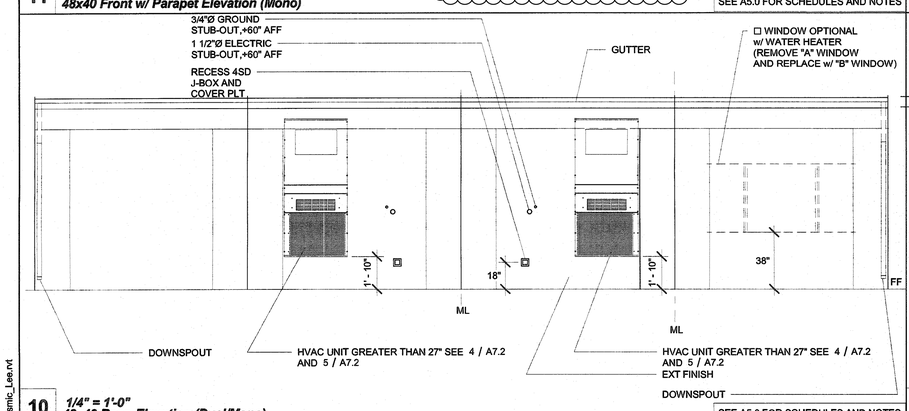

10 1/4" = 1'-0"
48x40 Rear Elevation (Dual/Mono)

SEE A5.0 FOR SCHEDULES AND NOTES

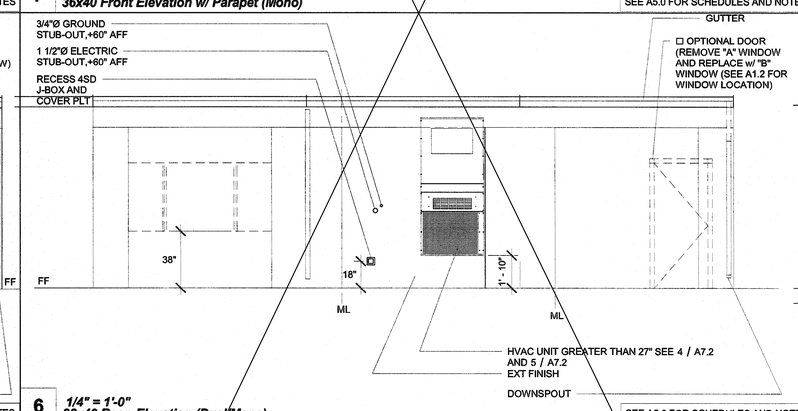

6 1/4" = 1'-0"
36x40 Rear Elevation (Dual/Mono)

SEE A5.0 FOR SCHEDULES AND NOTES

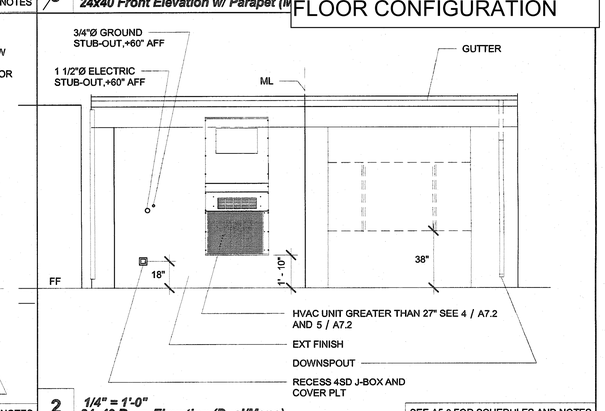

2 1/4" = 1'-0"
24x40 Rear Elevation (Dual/Mono)

SEE A5.0 FOR SCHEDULES AND NOTES

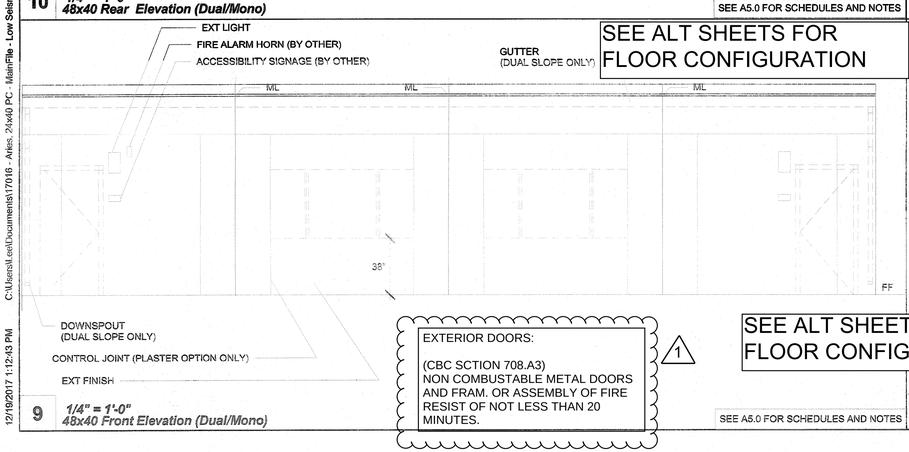

9 1/4" = 1'-0"
48x40 Front Elevation (Dual/Mono)

SEE A5.0 FOR SCHEDULES AND NOTES

EXTERIOR DOORS:

(CBC SCTION 708.A3)
NON COMBUSTABLE METAL DOORS AND FRAM. OR ASSEMBLY OF FIRE RESIST OF NOT LESS THAN 20 MINUTES.

1

SEE ALT SHEETS FOR FLOOR CONFIGURATION

SEE ALT SHEETS FOR FLOOR CONFIGURATION

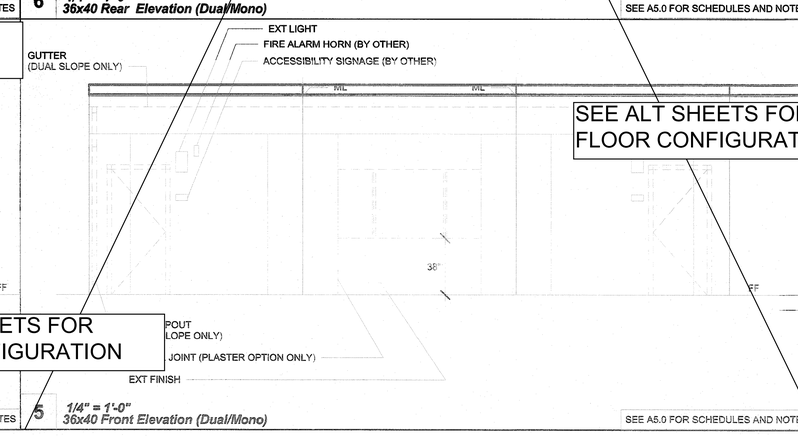

5 1/4" = 1'-0"
36x40 Front Elevation (Dual/Mono)

SEE A5.0 FOR SCHEDULES AND NOTES

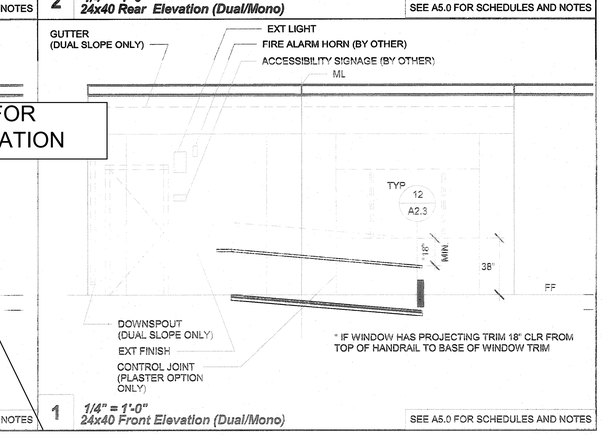

1 1/4" = 1'-0"
24x40 Front Elevation (Dual/Mono)

SEE A5.0 FOR SCHEDULES AND NOTES

IDENTIFICATION STAMP
DIV. OF THE STATE ARCHITECT
APP: 01-119031 INC:
REVIEWED FOR
SS ☑ FLS ☑ ACS ☑
DATE: 10/22/2020

PROFESSIONAL STAMP

REGISTERED PROFESSIONAL ENGINEER
JAMMY D. FRANSEN
C-63380
STRUCTURAL
STATE OF CALIFORNIA

12/19/2017

THE PLANS, IDEAS & DESIGNS SHOWN ON THESE DRAWINGS ARE THE PROPERTY OF R&S TAVARES ASSOCIATES, INC. DEVISED SOLELY FOR THIS CONTRACT. THESE PLANS SHALL NOT BE USED, IN WHOLE OR IN PART, FOR ANY PURPOSE FOR WHICH THEY WERE NOT INTENDED WITHOUT THE EXPRESS WRITTEN CONSENT OF R&S TAVARES ASSOCIATES, INC. ©

CLIENT

CLASS LEASING LLC
1221 Harley Knox Boulevard
Perris, CA 92571

ORIGINAL PC STATE AGENCY APPROVAL

FILE NUMBER: PC-128
IDENTIFICATION STAMP
DIVISION OF THE STATE ARCHITECT
04 - 116504 INCR: 0
AC RM FLS EA SSR KER
DATE 07/19/2018

PROJECT TITLE

24' x 40'
EXPANDABLE TO
120' x 40'

PRE-CHECK (PC) DOCUMENT
Code: [2016] CBC
A separate project application for construction is required.

PROJECT SPECIFIC STATE AGENCY APPROVAL

Revision Schedule

#	Description	Date

SHEET TITLE

ENDWALL ELEVATIONS

PROJECT NUMBER
17016A

DRAWN BY
rMc/SC

CHECKED BY
JA/RT

DATE
2017/06/05

SHEET NO.
A5.1

SHEET OF SHEETS

C:\Users\rfcelt\Documents\17016 - Aries, 24x40 PC - MainFile - Low Seismic_Lee.rvt
12/19/2017 1:12:43 PM

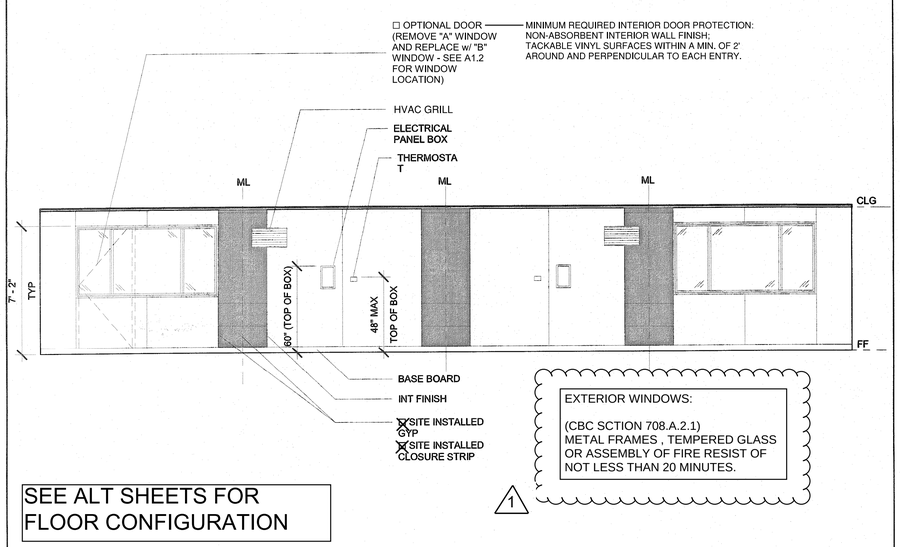

7 *1/4" = 1'-0"*
48x40 Rear Interior Elevation

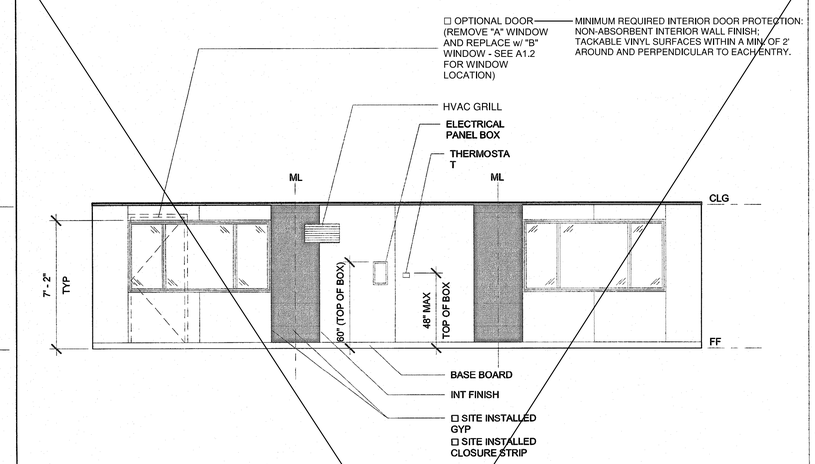

6 *1/4" = 1'-0"*
36x40 Rear Interior Elevation

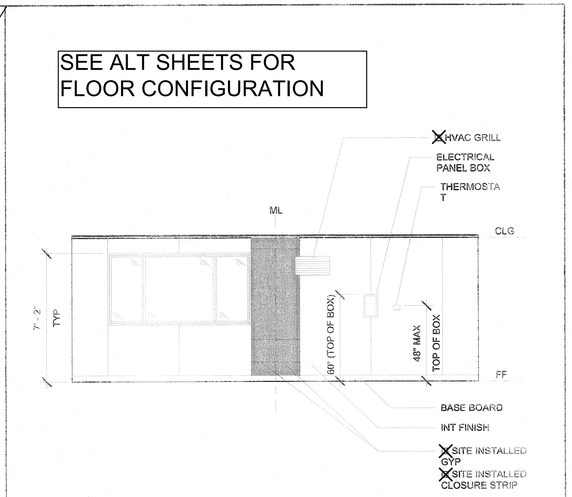

4 *1/4" = 1'-0"*
24x40 Rear Interior Elevation

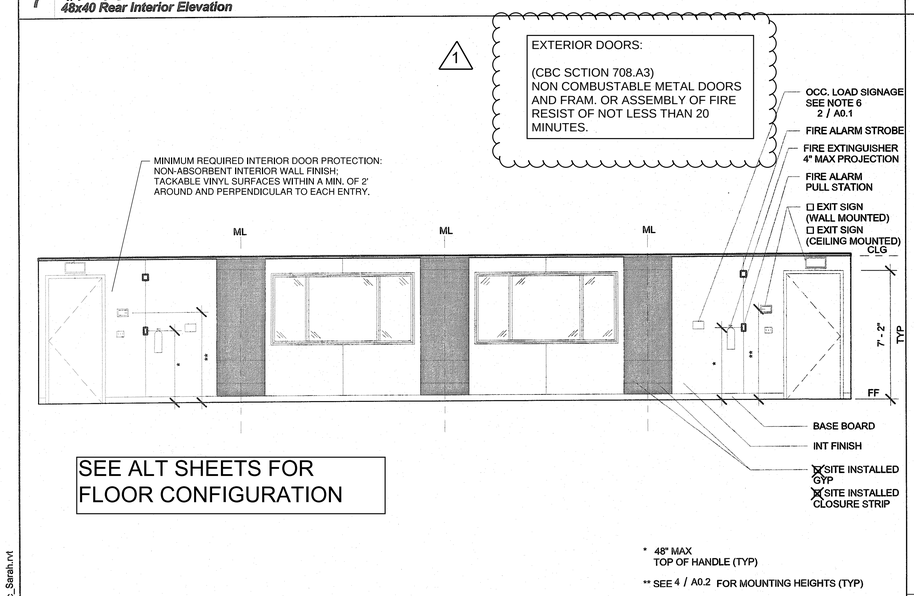

8 *1/4" = 1'-0"*
48x40 Front Interior Elevation

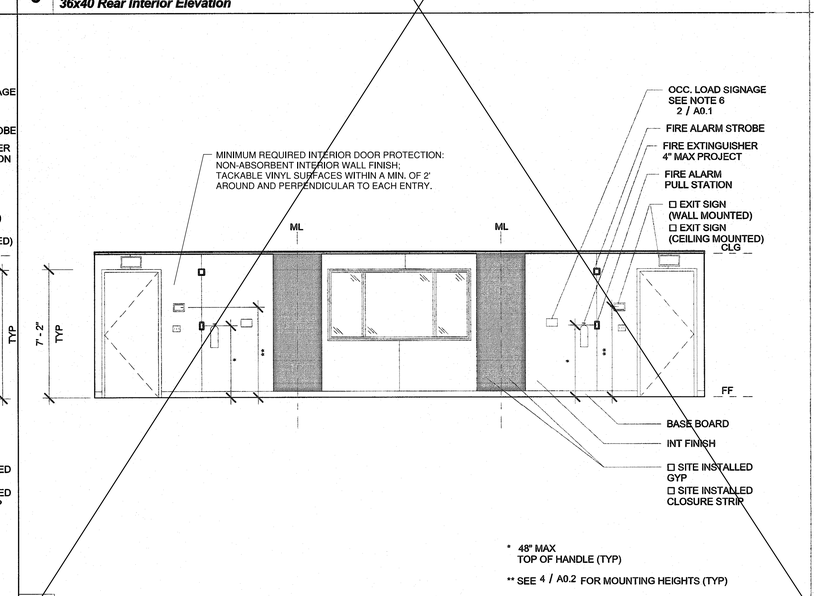

5 *1/4" = 1'-0"*
36x40 Front Interior Elevation

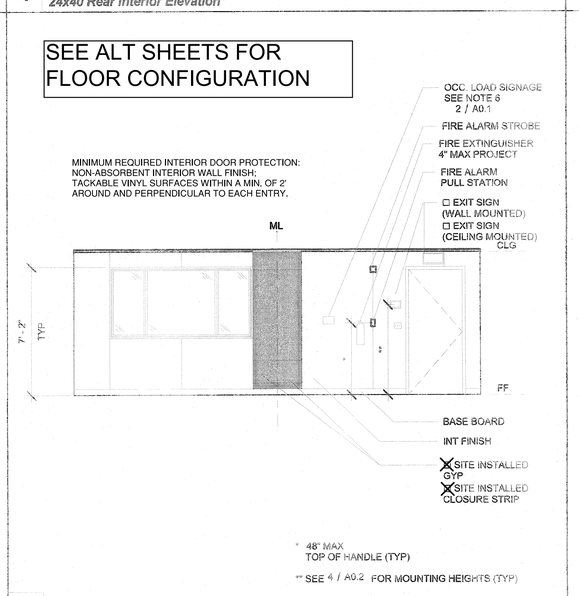

3 *1/4" = 1'-0"*
24x40 Front Interior Elevation

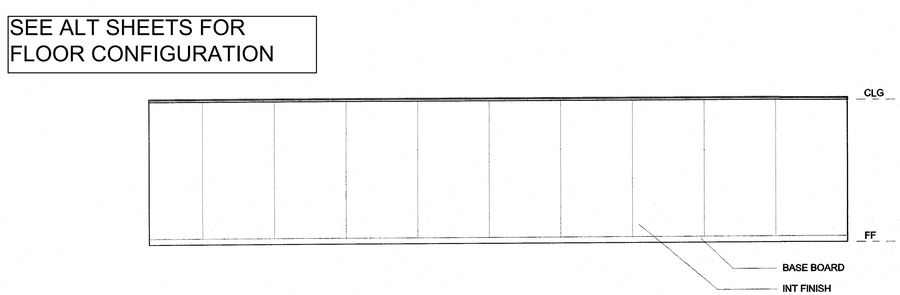

1 *1/4" = 1'-0"*
Interior Elevation (Left)

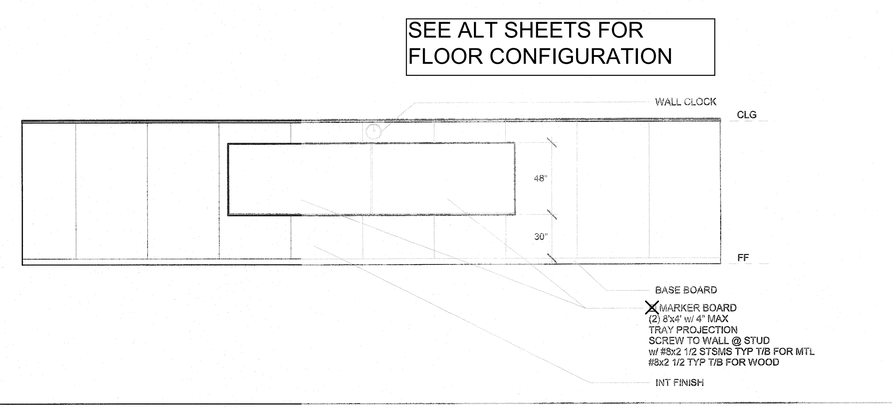

2 *1/4" = 1'-0"*
Interior Elevation (Right)

IDENTIFICATION STAMP
DIV. OF THE STATE ARCHITECT
APP: 01-119031 INC:
REVIEWED FOR
SS ☑ FLS ☑ ACS ☑
DATE: 10/22/2020

PROFESSIONAL STAMP

12/19/2017

THE PLANS, IDEAS & DESIGNS SHOWN ON THESE DRAWINGS ARE THE PROPERTY OF R&S TAVARES ASSOCIATES, INC. DEVISED SOLELY FOR THIS CONTRACT. THESE PLANS SHALL NOT BE USED, IN WHOLE OR IN PART, FOR ANY PURPOSE FOR WHICH THEY WERE NOT INTENDED WITHOUT THE EXPRESS WRITTEN CONSENT OF R&S TAVARES ASSOCIATES, INC. ©

CLIENT

CLASS LEASING LLC
1221 Harley Knox Boulevard
Perris, CA 92571

ORIGINAL PC STATE AGENCY APPROVAL

FILE NUMBER: PC-128
IDENTIFICATION STAMP
DIVISION OF THE STATE ARCHITECT
04 - 116504 INCR: 0
AC RM FLS EA SSR KER
DATE 07/19/2018

PROJECT TITLE
24' x 40'
EXPANDABLE TO
120' x 40'

PRE-CHECK (PC) DOCUMENT
Code: [2016] CBC
A separate project application for construction is required.

PROJECT SPECIFIC STATE AGENCY APPROVAL

Revision Schedule

#	Description	Date

SHEET TITLE
INTERIOR ELEVATIONS

PROJECT NUMBER
17016A

DRAWN BY
rMc/SC

CHECKED BY
JA/RT

DATE
2017/06/05

SHEET NO.
A5.2

SHEET OF SHEETS

12/18/2017 3:38:16 PM C:\Users\Sarah\Documents\17016 - Aries, 24x40 PC - MainFile - Low Seismic_Sarah.rvt

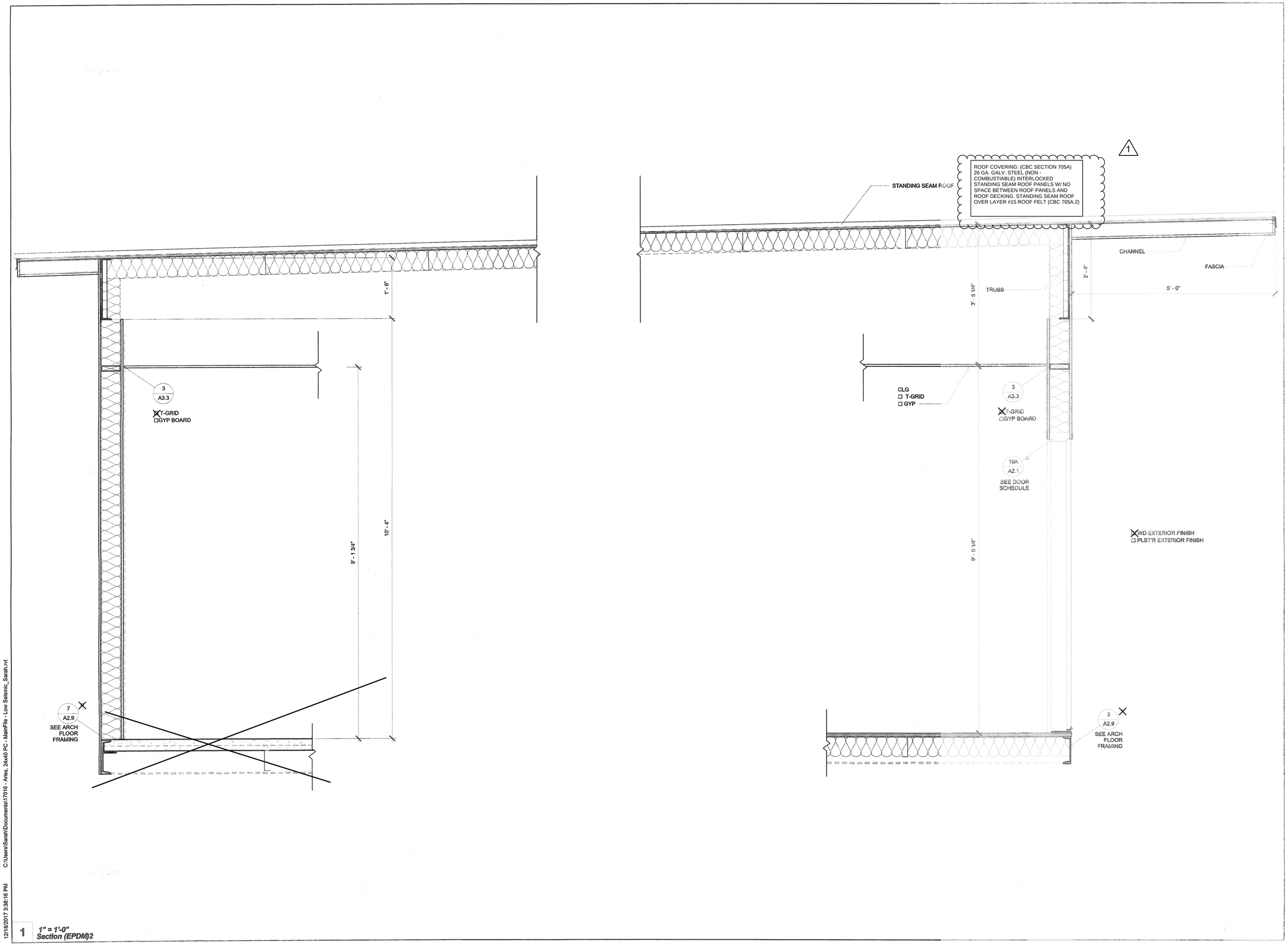

1 1" = 1'-0"
Section (EPDM)2

12/19/2017 3:38:16 PM C:\Users\Sarah\Documents\17016 - Aries, 24x40 PC - MainFile - Low Seismic_Sarah.rvt

IDENTIFICATION STAMP
DIV. OF THE STATE ARCHITECT
APP: 01-119031 INC:
REVIEWED FOR
SS ☑ FLS ☑ ACS ☑
DATE: 10/22/2020

PROFESSIONAL STAMP

REGISTERED PROFESSIONAL ENGINEER
MANUEL D. FRANCO
No. 3 STRUCTURAL
STATE OF CALIFORNIA

12/19/2017

THE PLANS, IDEAS & DESIGNS SHOWN ON THESE DRAWINGS ARE THE PROPERTY OF R&S TAVARES ASSOCIATES, INC. DEVISED SOLELY FOR THIS CONTRACT. THESE PLANS SHALL NOT BE USED, IN WHOLE OR IN PART, FOR ANY PURPOSE FOR WHICH THEY WERE NOT INTENDED WITHOUT THE EXPRESS WRITTEN CONSENT OF R&S TAVARES ASSOCIATES, INC. ©

CLIENT
CLASS LEASING LLC
1221 Harley Knox Boulevard
Perris, CA 92571

ORIGINAL PC STATE AGENCY APPROVAL
FILE NUMBER: PC-128
IDENTIFICATION STAMP
DIVISION OF THE STATE ARCHITECT
04 - 116504 INCR: 0
AC RM FLS EA SSR KER
DATE 07/19/2018

PROJECT TITLE
24' x 40'
EXPANDABLE TO
120' x 40'

PRE-CHECK (PC) DOCUMENT
Code: [2016] CBC
A separate project application for construction is required.

PROJECT SPECIFIC STATE AGENCY APPROVAL

Revision Schedule

#	Description	Date

SHEET TITLE
SECTION - STANDING SEAM (MONO)

PROJECT NUMBER
17016A

DRAWN BY
rMc/SC

CHECKED BY
JA/RT

DATE
2017/06/05

SHEET NO.
A6.0

SHEET OF SHEETS

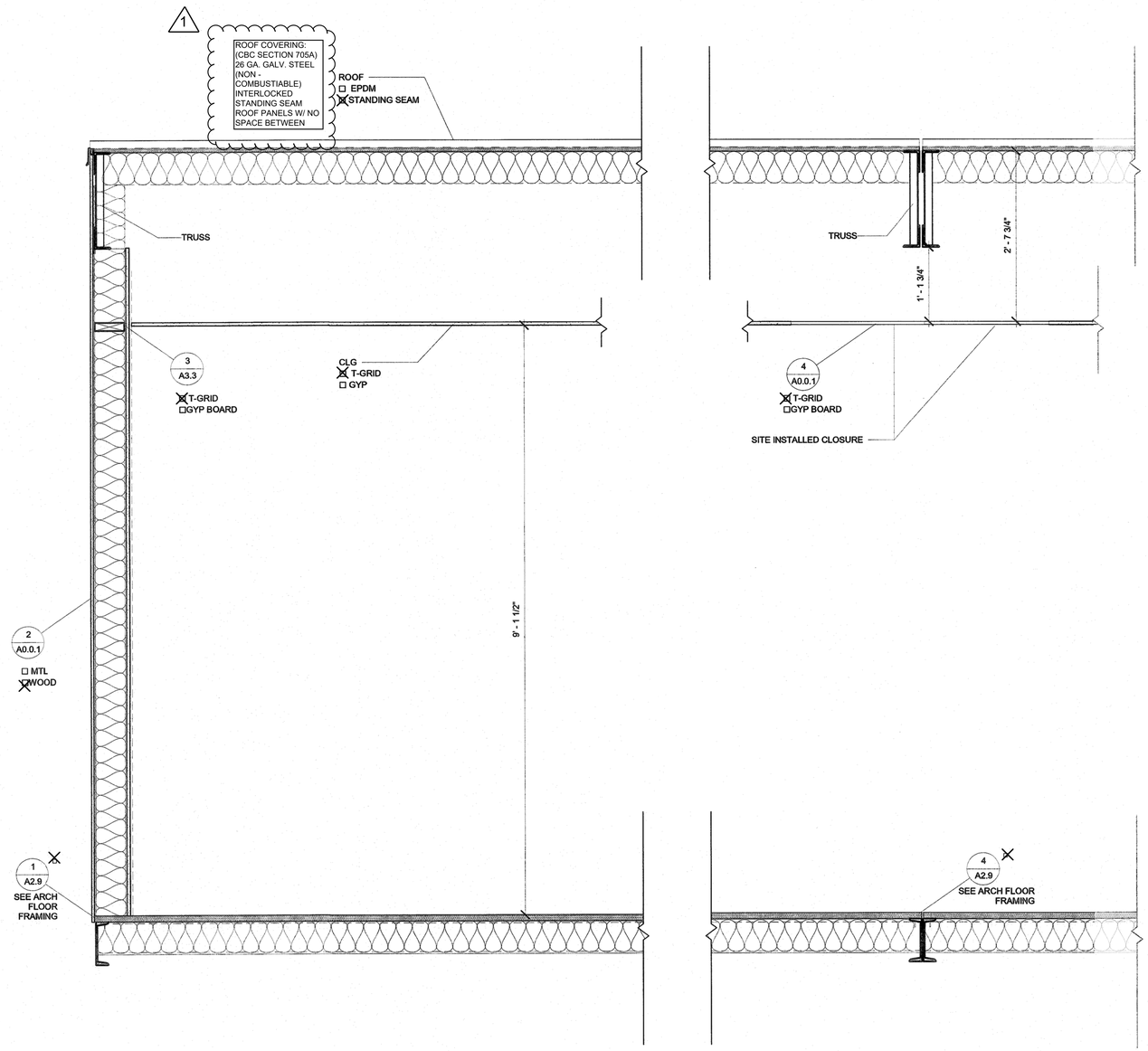

1 1" = 1'-0"
Latitudinal Section

12/18/2017 3:38:17 PM C:\Users\Sarah\Documents\17016 - Aries, 24x40 PC - MainFile - Low Seismic_Sarah.rvt

IDENTIFICATION STAMP
DIV. OF THE STATE ARCHITECT
APP: 01-119031 INC:
REVIEWED FOR
SS ☑ FLS ☑ ACS ☑
DATE: 10/22/2020

PROFESSIONAL STAMP

REGISTERED PROFESSIONAL ENGINEER MARVIN D. ROSS No. 5382 STRUCTURAL STATE OF CALIFORNIA

12/19/2017

THE PLANS, IDEAS & DESIGNS SHOWN ON THESE DRAWINGS ARE THE PROPERTY OF R&S TAVARES ASSOCIATES, INC. DEVISED SOLELY FOR THIS CONTRACT. THESE PLANS SHALL NOT BE USED, IN WHOLE OR IN PART, FOR ANY PURPOSE FOR WHICH THEY WERE NOT INTENDED WITHOUT THE EXPRESS WRITTEN CONSENT OF R&S TAVARES ASSOCIATES, INC. ©

CLIENT

CLASS LEASING LLC
1221 Harley Knox Boulevard
Perris, CA 92571

ORIGINAL PC STATE AGENCY APPROVAL

FILE NUMBER: PC-128
IDENTIFICATION STAMP
DIVISION OF THE STATE ARCHITECT
04 - 116504 INCR: 0
AC RM FLS EA SSR KER
DATE 07/19/2018

PROJECT TITLE

24' x 40'
EXPANDABLE TO
120' x 40'

PRE-CHECK (PC) DOCUMENT
Code: [2016] CBC
A separate project application for construction is required.

PROJECT SPECIFIC STATE AGENCY APPROVAL

Revision Schedule

#	Description	Date

SHEET TITLE
SECTION

PROJECT NUMBER
17016A

DRAWN BY
rMc/SC

CHECKED BY
JA/RT

DATE
2017/06/05

SHEET NO.
A6.2

SHEET OF SHEETS

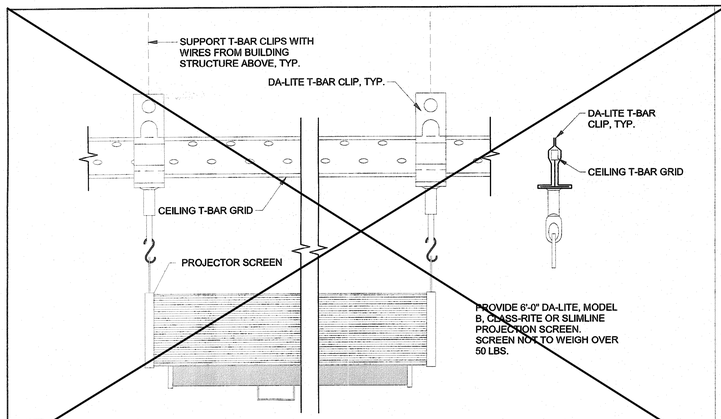

7 1 1/2" = 1'-0"
Projection Screen Mounting

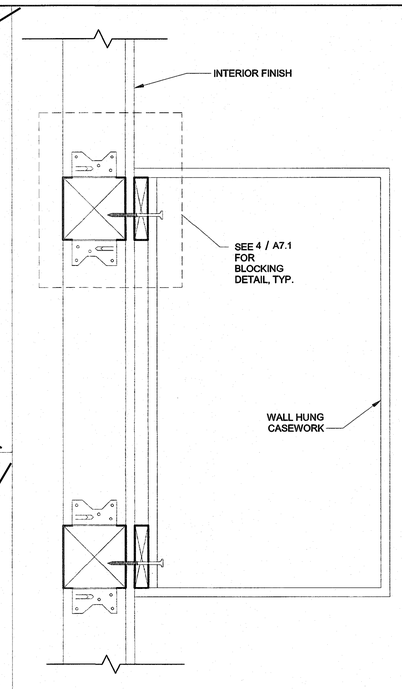

5 3" = 1'-0"
Wall Hung Anchorage Cabinet at Wood Stud

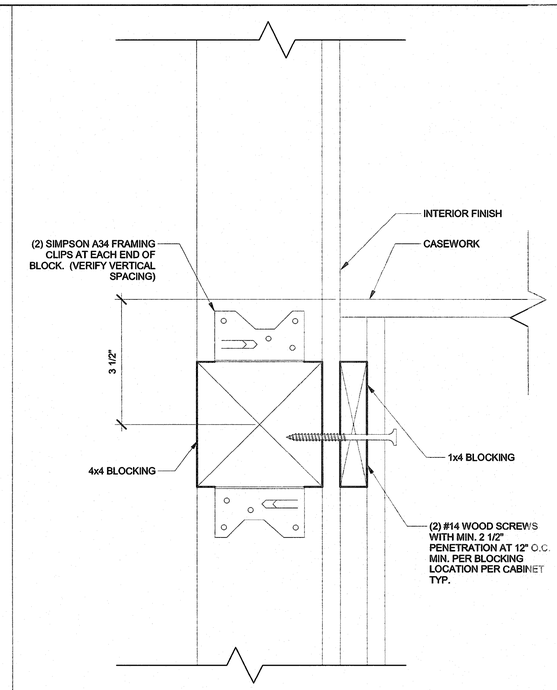

4 6" = 1'-0"
Attachment to Blocking at Wood Stud

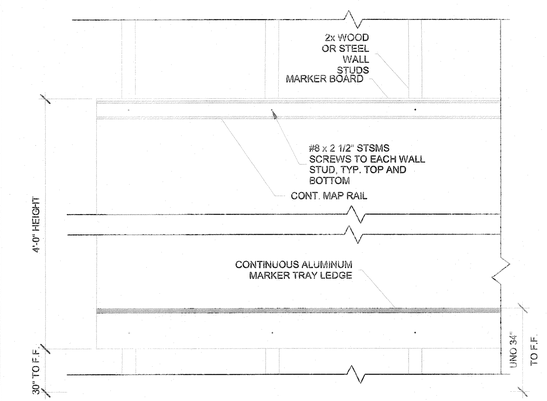

3 1 1/2" = 1'-0"
Marker Board Attachment

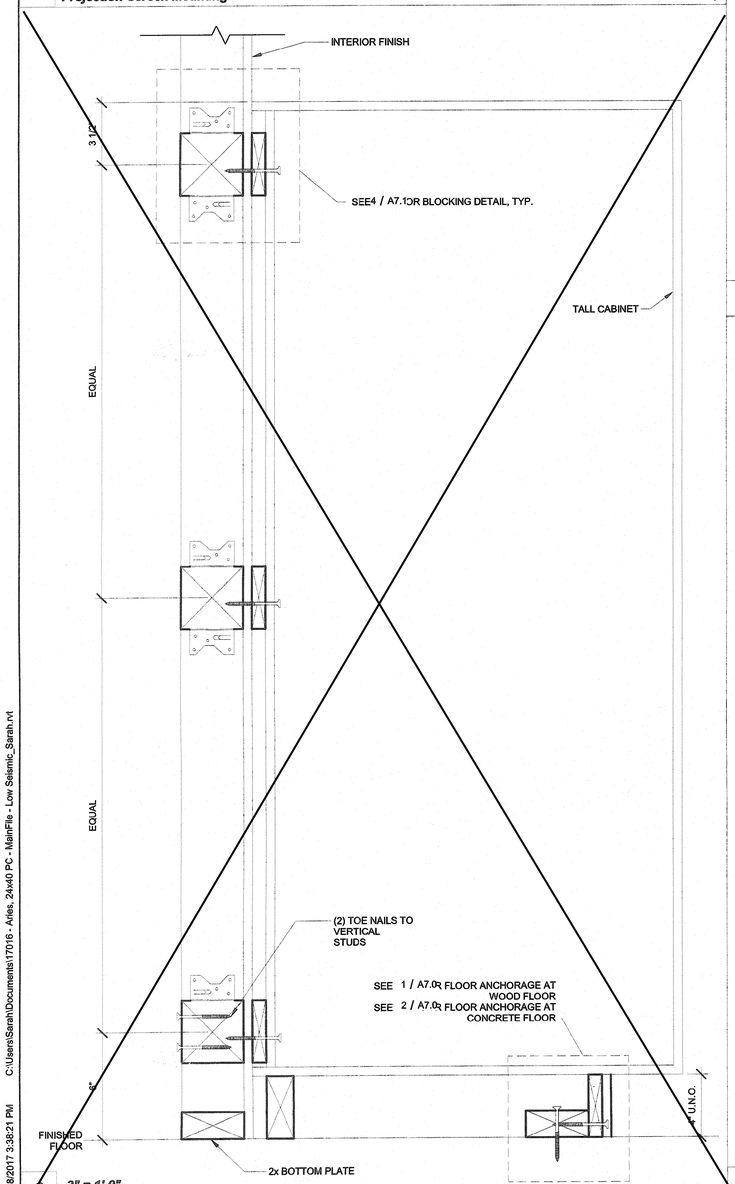

6 3" = 1'-0"
Tall Cabinet Wall Anchorage at Wood Stud

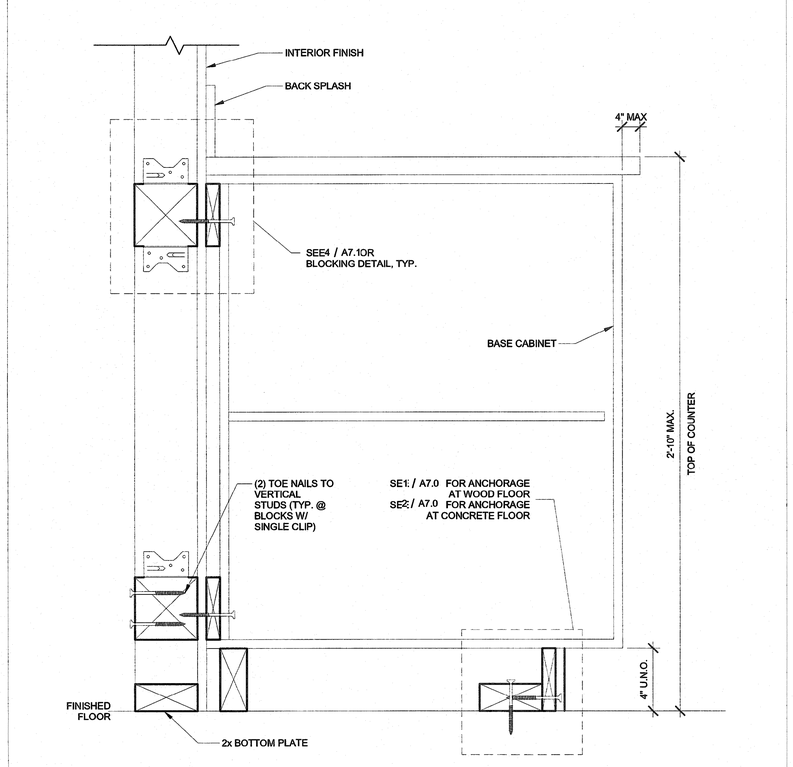

2 3" = 1'-0"
Base Cabinet Wall Anchorage at Wood Stud

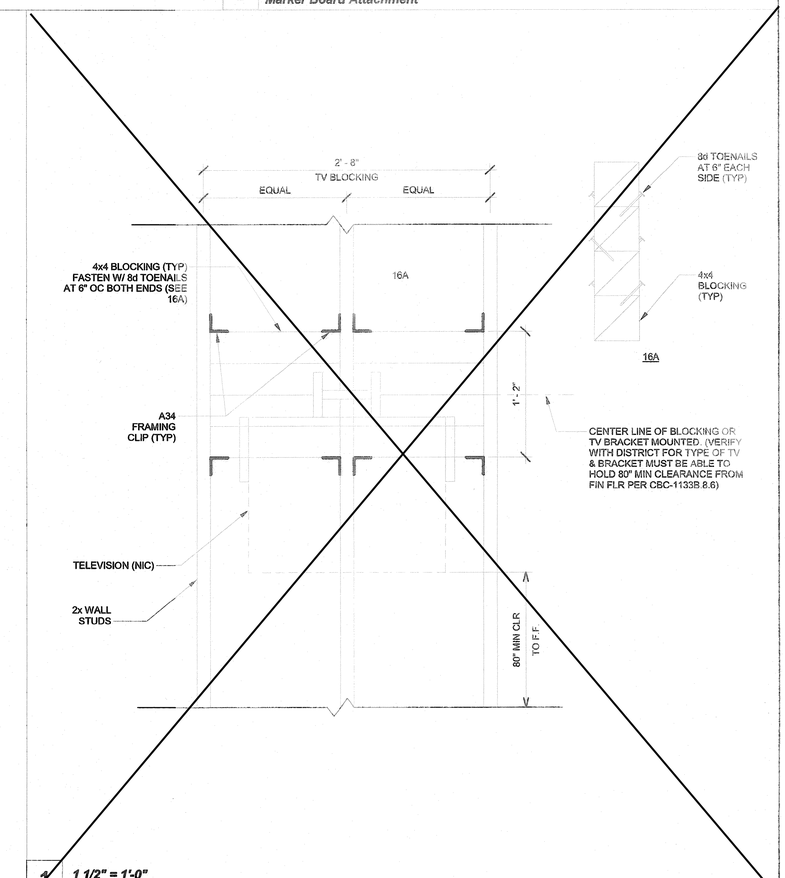

1 1 1/2" = 1'-0"
T.V. Blocking Attachment at Wood Stud

12/18/2017 3:38:21 PM C:\Users\Sarah\Documents\17016 - Aries, 24x40 PC - MainFile - Low Seismic_Sarah.rvt

IDENTIFICATION STAMP
DIV. OF THE STATE ARCHITECT
APP: 01-119031 INC:
REVIEWED FOR
SS ☑ FLS ☑ ACS ☑
DATE: 10/22/2020

PROFESSIONAL STAMP

REGISTERED PROFESSIONAL ENGINEER MANDY D. FRANSEN C 56-35821 STRUCTURAL STATE OF CALIFORNIA

12/19/2017

THE PLANS, IDEAS & DESIGNS SHOWN ON THESE DRAWINGS ARE THE PROPERTY OF R&S TAVARES ASSOCIATES, INC. DEVISED SOLELY FOR THIS CONTRACT. THESE PLANS SHALL NOT BE USED, IN WHOLE OR IN PART, FOR ANY PURPOSE FOR WHICH THEY WERE NOT INTENDED WITHOUT THE EXPRESS WRITTEN CONSENT OF R&S TAVARES ASSOCIATES, INC. ©

CLIENT

CLASS LEASING LLC
1221 Hartley Knox Boulevard
Perris, CA 92571

ORIGINAL PC STATE AGENCY APPROVAL

FILE NUMBER: PC-128
IDENTIFICATION STAMP
DIVISION OF THE STATE ARCHITECT
04 - 116504 INCR: 0
AC RM FLS EA SSR KER
DATE 07/19/2018

PROJECT TITLE
24' x 40'
EXPANDABLE TO
120' x 40'

PRE-CHECK (PC) DOCUMENT
Code: [2016] CBC
A separate project application for construction is required.

PROJECT SPECIFIC STATE AGENCY APPROVAL

Revision Schedule

#	Description	Date

SHEET TITLE
ADDITIONAL OPTION DETAILS

PROJECT NUMBER
17016A

DRAWN BY
rMc/SC

CHECKED BY
JA/RT

DATE
2017/06/05

SHEET NO.
A7.1

SHEET OF SHEETS

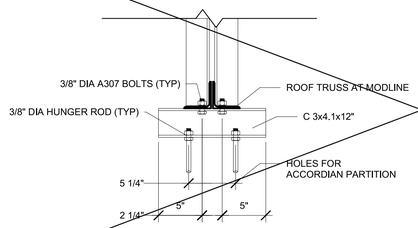

2 *1 1/2" = 1'-0"*
ACCORDIAN DOOR - TOP CONN AT TRUSS

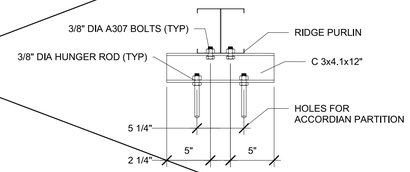

1 *1 1/2" = 1'-0"*
ACCORDIAN DOOR - TOP CONN AT PURLIN

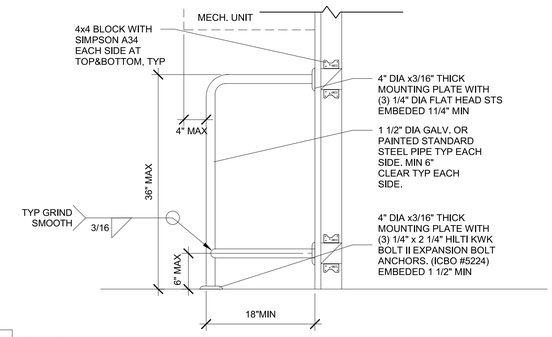

5 *1" = 1'-0"*
HVAC BARRIER at wood stud

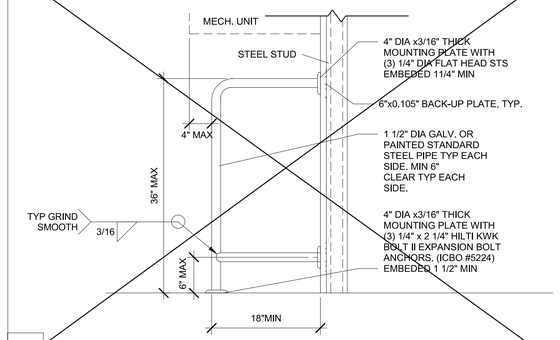

4 *1" = 1'-0"*
HVAC BARRIER at steel stud

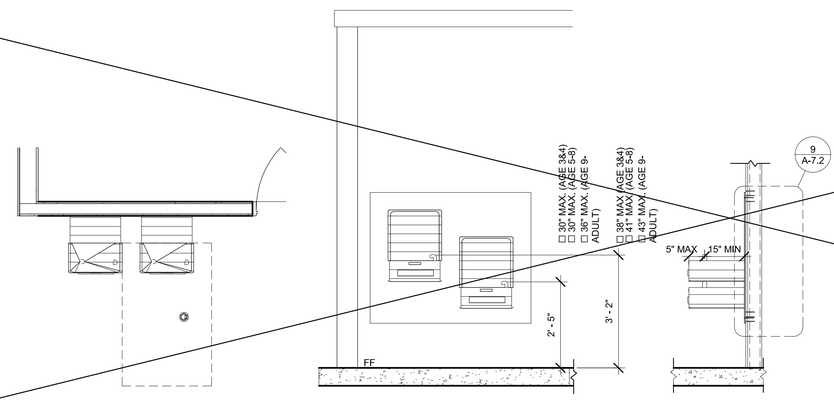

6 *1/2" = 1'-0"*
Drinking Fountain Blocking Detail steel stud

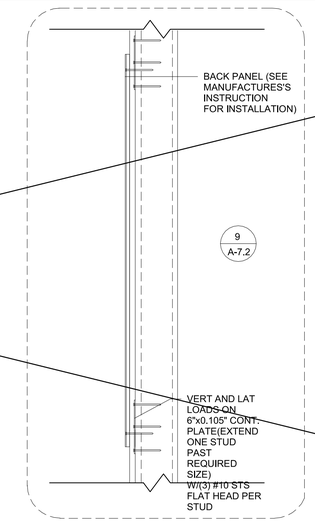

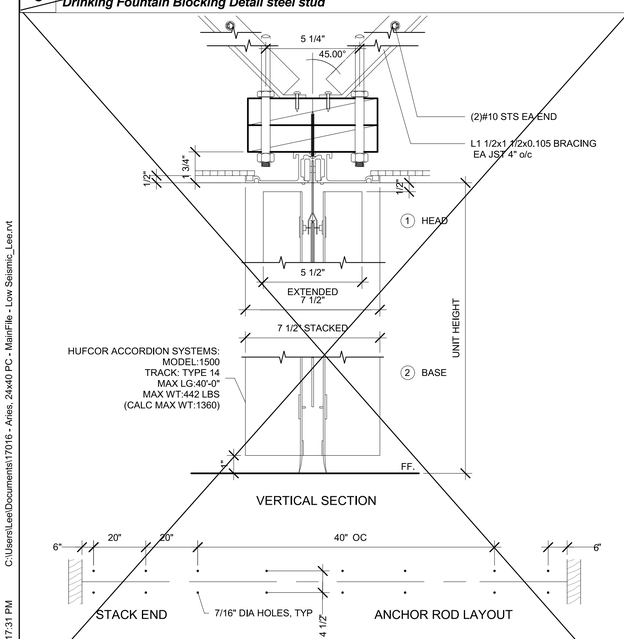

3 *3" = 1'-0"*
ACCORDION PARTITION ATTACHMENT

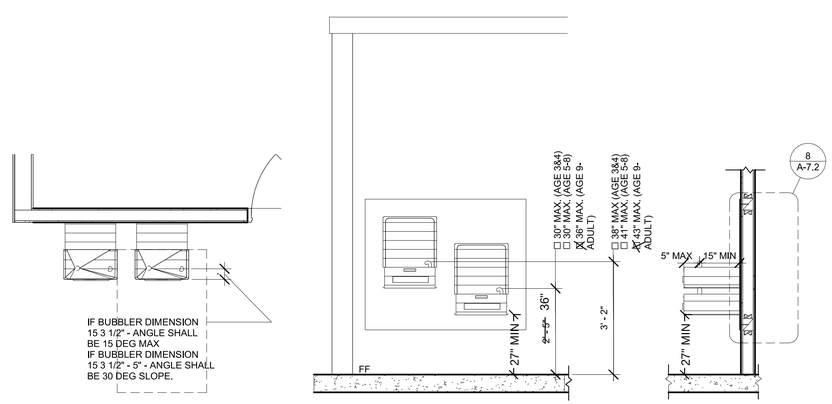

7 *1/2" = 1'-0"*
Drinking Fountain Blocking Detail wood stud

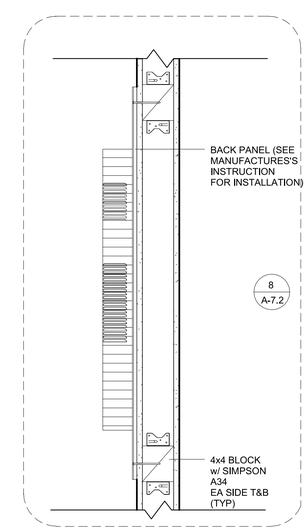

IDENTIFICATION STAMP
DIV. OF THE STATE ARCHITECT
APP: 01-119031 INC:
REVIEWED FOR
SS ☑ FLS ☑ ACS ☑
DATE: 10/22/2020

PROFESSIONAL STAMP

REGISTERED PROFESSIONAL ENGINEER
MANNY D. FRANCO
C-43804
STRUCTURAL
STATE OF CALIFORNIA

12/19/2017

THE PLANS, IDEAS & DESIGNS SHOWN ON THESE DRAWINGS ARE THE PROPERTY OF R&S TAVARES ASSOCIATES, INC. DEVISED SOLELY FOR THIS CONTRACT. THESE PLANS SHALL NOT BE USED, IN WHOLE OR IN PART, FOR ANY PURPOSE FOR WHICH THEY WERE NOT INTENDED WITHOUT THE EXPRESS WRITTEN CONSENT OF R&S TAVARES ASSOCIATES, INC. ©

CLIENT

CLASS LEASING LLC
1221 Harley Knox Boulevard
Perris, CA 92571

ORIGINAL PC STATE AGENCY APPROVAL
FILE NUMBER: PC-128
IDENTIFICATION STAMP
DIVISION OF THE STATE ARCHITECT
04 - 116504 INCR: 0
AC RM FLS EA SSR KER
DATE 07/19/2018

PROJECT TITLE
24' x 40'
EXPANDABLE TO
120' x 40'

PRE-CHECK (PC) DOCUMENT
Code: [2016] **CBC**
A separate project application for construction is required.

PROJECT SPECIFIC STATE AGENCY APPROVAL

Revision Schedule

#	Description	Date

SHEET TITLE
ADDITIONAL OPTION DETAILS

PROJECT NUMBER
17016A

DRAWN BY
rMc/SC

CHECKED BY
JA/RT

DATE
2017/06/05

SHEET NO.
A7.2

SHEET OF SHEETS

C:\Users\Lee\Documents\17016 - Aries, 24x40 PC - MainFile - Low Seismic_Lee.rvt
1/4/2018 12:17:31 PM

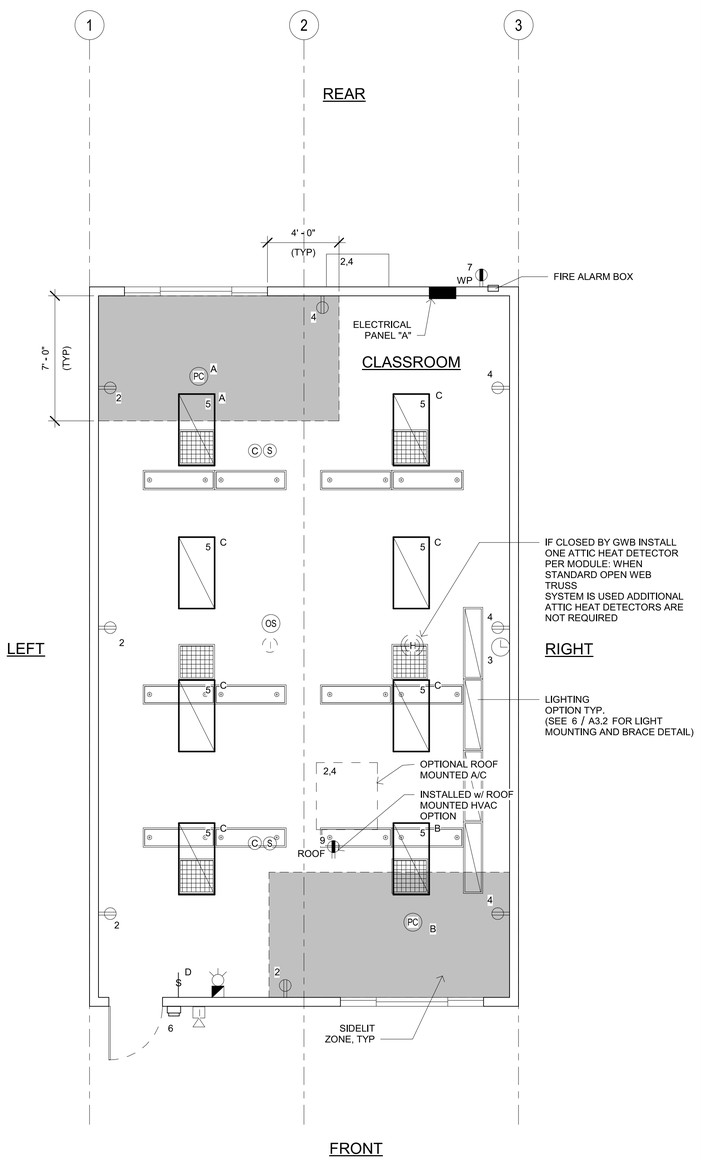

SEE ALT SHEETS FOR
FLOOR CONFIGURATION

NOTE: PROVIDE A MINIMUM OF 72 SF SOLAR READY AREA PER MODULE. AREA TO BE A MINIMUM OF 5' IN ANY DIRECTION WITH A MINIMUM SPACE OF 80 SF PER BUILDING.

1 *1/4" = 1'-0"*
ELECTRICAL PLAN

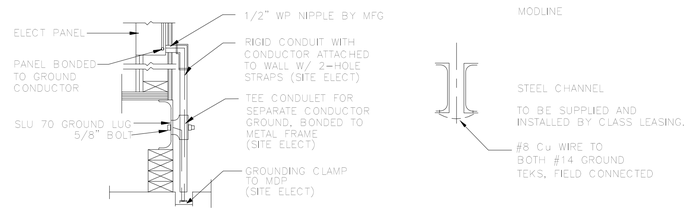

NOTES:

1. BOND SEPARATE CONDUCTORS FROM GROUND ROD TO ELEC'L. PANEL & TO METAL BUILDING FRAME (CEC 250.52) IN ADDITION TO THE DETAIL SHOWN ABOVE. BOND THE ELECTRICAL GROUND TO METAL UNDERGROUND WATER PIPE IN DIRECT CONTACT WITH THE EARTH FOR 10 FT. OR MORE, IF AVAILABLE (CEC 250.52)

2. CHECK RESISTANT TO GROUND ROD. IF RESISTANCE EXCEEDS 25 OHMS, INSTALL ADDITIONAL GROUND RODS WITH CONDUCTORS AS SHOWN SEPARATED AT LEAST 6'-0" UNTIL RESISTANCE IS REDUCED TO 25 OHMS OR LESS (CEC 250.56).

3. ELEC. TRADE SHALL CHECK AREA FOR EXISTING CONDUITS, SEWER, GAS & WATER PIPING BEFORE DRIVING GROUND RODS.

4. ALL MODULES OF STEEL FRAME BLDGS. SHALL BE ELECTRICALLY BONDED TOGETHER (BOLTING ONLY IS NOT ACCEPTABLE BONDING). BONDING SHALL INCLUDE METAL RAMP & STAIRS.

5. SIZE OF CONDUCTORS SHALL COMPLY WITH CEC TABLE 250.66

2 *1 1/2" = 1'-0"*
TYPICAL GROUNDING DETAIL

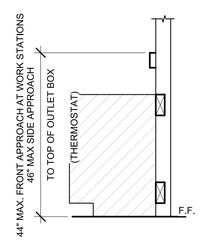

3 *1" = 1'-0"*
ELEV. @ WORKSTATION

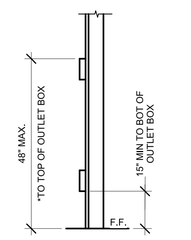

* 30"x48" MIN CLR FLOOR SPACE
AT EACH LOCATION FOR
PERPENDICULAR APPROACH

4 *1" = 1'-0"*
MOUTING ELEV.

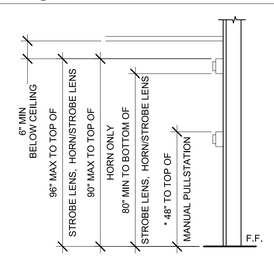

* PROVIDE MIN 30"x48" CLR
FLOOR SPACE FOR
PERPENDICULAR APPROACH
AT EACH LOCATION

THE SWITCH OR SWITCHES INSTALLED IN EMERGENCY LIGHTING CIRCUITS SHALL BE SO ARRANGED THAT ONLY AUTHORIZED PERSONNEL WILL HAVE CONTROL OF EMERGENCY LIGHTING. (CEC art. 700.20)

5 *1" = 1'-0"*
FIRE ALARM MOUNTING HEIGHTS

GENERAL GROUNDING NOTES

EACH BUILDING SHALL BE GROUNDED SEPARARELY WITH A ¾" ROUND X 8 FEET COPPERCLAD STEEL GROUND ROD. WHERE ROCK BOTOOM IS FOUND, DRIVE ROD AT 45 DEGREES MAXIMUM FROM THE VERTICAL OR HAVE IT BURIED IN A TRENCH 30" DEEP MINIMUM.

TESTING FOR RESISTANCE TO GROUND, IF RESISTANCE EXCEEDS 25 OHMS INSTALL ADDITIONAL GROUND RODS SEPARATED AT LEAST 6 FEET, UNTIL RESISTANCE REDUCES TO 25 OHMS OR LESS. GROUND TEST MUST BE DONE IN THE PRESENCE OF THE PROJECT INSPECTOR AND ALL GROUNDING SHALL BE IN ACCORDANCE WITH CEC ARTICLE 250

EQUIPMENT ANCHORAGE

ALL MECHANICAL, PLUMBING AND ELECTRICAL COMPONENTS SHALL BE ANCHORED AND INSTALLED PER THE DETAILS ON THE DSA APPROVED CONSTRUCTION DOCUMENTS. WHERE NO DETAIL IS INDICATED, THE FOLLOWING COMPONENTS SHALL BE ANCHORED OR BRACED TO MEET THE FORCE AND DISPLACEMENT REQUIREMENTS PRESCRIBED IN THE 2013 CBC, SECTIONS 1616A.1.18 THROUGH 1616A.1.26 AND ASCE 7-10 CHAPTER 13, 26 AND 30.

1. ALL PERMANENT EQUIPMENT AND COMPONENTS.
2. TEMPORARY OR MOVABLE EQUIPMENT THAT IS PERMANENTLY ATTACHED (E.G. HARD WIRED) TO THE BUILDING UTILITY SERVICES SUCH AS ELECTRICITY, GAS OR WATER.
3. MOVABLE EQUIPMENT WHICH IS STATIONED IN ONE PLACE FOR MORE THAN 8 HOURS AND HEAVIER THAN 400 POUNDS ARE REQUIRED TO BE ANCHORED WITH TEMPORARY ATTACHMENTS.

THE ATTACHMENT OF THE FOLLOWING MECHANICAL AND ELECTRICAL COMPONENTS SHALL BE POSITIVELY ATTACHED TO THE STRUCTURE, BUT NEED NOT BE DETAILED ON THE PLANS. THESE COMPONENTS SHALL HAVE FLEXIBLE CONNECTIONS PROVIDED BETWEEN THE COMPONENT AND ASSOCIATED DUCTWORK, PIPING, AND CONDUIT.

A. COMPONENTS WEIGHING LESS THAN 400 POUNDS AND HAVE A CENTER OF MASS LOCATED 4 FEET OR LESS ABOVE THE ADJACENT FLOOR OR ROOF LEVEL THAT DIRECTLY SUPPORT THE COMPONENT.
B. COMPONENTS WEIGHING LESS THAN 20 POUNDS, OR IN THE CASE OF DISTRIBUTED SYSTEMS, LESS THAN 5 POUNDS PER FOOT, WHICH ARE SUSPENDED FROM A ROOF OR FLOOR OR HUNG FROM A WALL.

FOR THOSE ELEMENTS THAT DO NOT REQUIRE DETAILS ON THE APPROVED DRAWINGS, THE INSTALLATION SHALL BE SUBJECT TO THE APPROVAL OF THE STRUCTURAL ENGINEER OF RECORD AND THE DSA DISTRICT STRUCTURAL ENGINEER. THE PROJECT INSPECTOR WILL VERIFY THAT ALL COMPONENTS AND EQUIPMENT HAVE BEEN ANCHORED IN ACCORDANCE WITH ABOVE REQUIREMENTS.

PIPING, DUCTWORK AND ELECTRICAL SYSTEM BRACING OF

PIPING, DUCTWORK AND ELECTRICAL DISTRIBUTION SYSTEMS SHALL BE BRACED TO COMPLY WITH THE FORCES AND DISPLACEMENTS PRESCRIBED IN ASCE 7-10 SECTION 13.3 AS DEFINED IN ASCE 7-10 SECTION 13.6.8, 13.6.7, 13.6.5.6 AND 2013 CBC SECTIONS 1616A.1.23, 1616A.1.24, 1616A.1.25 AND 1616A.1.26

THE BRACING AND ATTACHMENTS TO THE STRUCTURE SHALL BE DETAILED ON THE APPROVED DRAWINGS OR THEY SHALL COMPLY WITH ONE OF THE OSHPD PRE-APPROVALS (OPA #) AS MODIFIED TO SATISFY ANCHORAGE REQUIREMENTS OF ACI 318, APPENDIX D.

COPIES OF THE MANUAL SHALL BE AVAILABLE ON THE JOBSITE PRIOR TO THE START OF HANGING AN BRACING OF THE PIPE, DUCTWORK AND ELECTRICAL DISTRIBUTION SYSTEMS.

THE STRUCTURAL ENGINEER OF RECORD SHALL VERIFY THE ADEQUACY OF THE STRUCTURE TO SUPPORT THE HANGER AND BRACE LOADS.

FIRE ALARM NOTES

PROVIDE SPACE ON ELECTRICAL PANEL FOR LOCK-ON BREAKER, IDENTIFIED WITH RED MARKING, FOR 120 VOLTS FIRE ALARM CIRCUIT, WITH BREAKER LABELED AS FIRE ALARM CIRCUIT, CEC 760.41 (B).
BREAKER AND CIRCUIT PROVIDED AND INSTALLED ON SITE BY OTHERS.

SMOKE AND HEAT DETECTOR CONDUIT AND DEVICES TO BE PROVIDED AND INTERCONNECTED TO THE FIRE ALARM SYSTEMS ON SITE BY OTHERS

APPROVAL OF THIS PLAN DOES NOT CONSTITUTE APPROVAL OF THIS FIRE ALARM SYSTEM FOR ALL SITES, THE FIRE ALARM SYSTEM AND COMPONENTS MAYBE REQUIRED TO BE CHANGED DUE TO EXISTING CONDITIONS OR INCOMPATIBLE COMPONENTS.

CONDUIT FILL AND CONDUCTOR CAPACITY TABLE

(ALL CONDUCTORS SHALL BE TYPE THHN/THWN 75 DEG. C. COPPER)

WIRE SIZE	CAPACITY	WIRE TYPE	NO. OF CONDUCTOR 1/2" C	3/4" C	1" C	1 1/4" C
#12	20A	THHN	9	16	25	45
#10	30A	THHN	5	10	16	28
#8	45A	THHN	2	5	8	14
#6	65A	THHN	1	3	5	10
#4	85A	THHN	1	2	4	7

JUNCTION BOX SIZE TABLE

BOX	SIZE	CU. IN.	MAX NO. OF CONDUCTORS #12	#10	#8	#6
4SS	1 1/4"x4" SQ	18.0	8	7	6	0
4S	1 1/2"x4" SQ	21.0	9	8	7	0
4SD	2 1/8"x4" SQ	30.3	13	12	10	6
4SX	2 7/8"x4" SQ	43.5	23	21	17	10
5SD	2 1/8"x4-11/16" SQ	42.0	18	16	14	6
5SX	3 7/8"x4-11/16" SQ	86.0	38	34	28	17
664	4"x6" SQ	144.0	64	57	48	28

* DEDUCT ONE CONDUCTOR FOR (1) OR MORE GROUNDING CONDUCTORS ENTERING THE BOX

IDENTIFICATION STAMP
DIV. OF THE STATE ARCHITECT
APP: 01-119031 INC:
REVIEWED FOR
SS ☑ FLS ☑ ACS ☑
DATE: 10/22/2020

PROFESSIONAL STAMP

REGISTERED PROFESSIONAL ENGINEER
MANNY D. FRANCISCO
C-34380
STRUCTURAL
STATE OF CALIFORNIA

12/19/2017

THE PLANS, IDEAS & DESIGNS SHOWN ON THESE DRAWINGS ARE THE PROPERTY OF R&S TAVARES ASSOCIATES, INC. DEVISED SOLELY FOR THIS CONTRACT. THESE PLANS SHALL NOT BE USED, IN WHOLE OR IN PART, FOR ANY PURPOSE FOR WHICH THEY WERE NOT INTENDED WITHOUT THE EXPRESS WRITTEN CONSENT OF R&S TAVARES ASSOCIATES, INC. ©

CLIENT

CLASS LEASING LLC
1221 Harley Knox Boulevard
Perris, CA 92571

ORIGINAL PC STATE AGENCY APPROVAL
FILE NUMBER: PC-128
IDENTIFICATION STAMP
DIVISION OF THE STATE ARCHITECT
04 - 116504 INCR: 0
AC RM FLS EA SSR KER
DATE 07/19/2018

PROJECT TITLE
24' x 40'
EXPANDABLE TO
120' x 40'

PRE-CHECK (PC) DOCUMENT
Code: [2016] CBC
A separate project application for construction is required.

PROJECT SPECIFIC STATE AGENCY APPROVAL

Revision Schedule

#	Description	Date

SHEET TITLE
ELECTRICAL PLAN
24x40

PROJECT NUMBER
17016A

DRAWN BY
rMc/SC

CHECKED BY
JA/RT

DATE
2017/06/05

SHEET NO.
E1.0

SHEET OF SHEETS

1/4/2018 2:43:42 PM C:\Users\Lee\Documents\17016 - Aries, 24x40 PC - MainFile - Low Seismic_Lee.rvt

PANEL A 24" x40"	120/208 VOLTS, 1 ϕ, 3 WIRE							MAIN LUGS ONLY	PANEL BOX= 100A	
	LOADCENTER	RECESSED MOUNTED						GRD & NEUTRAL BARS		AMP BUS
	VOLTAMPS		10000 AIC					VOLTAMPS		
DESCRIPTION	ϕ A	ϕ B	C/B	CKT	ϕ	CKT	C/B	ϕA	ϕ B	DESCRIPTION
AC WALL MOUNTED	6670		30	1	A	2	20	720		OUTLETS
		6670	30	3	B	4	20		720	OUTLETS
GENERAL LIGHTING	768		20	5	A	6	20	40		EXTERIOR LIGHT
EXTERIOR GFI/WP		180	20	7	B	8	20			
			20	9	A	10	20	40		FIRE ALARM
SUBTOTAL	ϕ A 7390	ϕ B 6850						ϕA 800	ϕ B 720	SUBTOTAL
TOTAL	8190	7570	8190 /120 VOLTS= 68.25 76.25 AMPS + .94= 77.19 AMPS							

1 1" = 1'-0"
ELECTRICAL PANEL_WALL MOUNTED

PANEL A 24" x40"	120/208 VOLTS, 3 ϕ, 3 WIRE							MAIN LUGS ONLY	PANEL BOX= 100A	
	LOADCENTER	SURFACE MOUNTED						GRD & NEUTRAL BARS		AMP BUS
	VOLTAMPS		10000 AIC					VOLTAMPS		
DESCRIPTION	ϕ A	ϕ B	C/B	CKT	ϕ	CKT	C/B	ϕA	ϕ B	DESCRIPTION
AC Roof Mounted	7360		30	1	A	2	20	720		OUTLETS
		7360	30	3	B	4	20		720	OUTLETS
GENERAL LIGHTING	768		20	5	A	6	20	40		EXTERIOR LIGHT
EXTERIOR GFI/WP		180	20	7	B	8	20			
			20	9	A	10	20	40		FIRE ALARM
SUBTOTAL	ϕ A 8080	ϕ B 7540						ϕA 800	ϕ B 720	SUBTOTAL
TOTAL	8880	8260	8880 /120 VOLTS= 74 74 AMPS + 18.5= 92.5 AMPS							

2 1" = 1'-0"
ELECTRICAL PANEL_ROOF MOUNTED

LEGEND

ELECTRICAL PANEL AT +80" AFF TO TOP OF ELECTRICAL PANEL WITH 1 1/2" DIA POWER STUB OUT

ROOF MOUNTED HVAC UNIT-SEE MECHANICAL DWGS

WALL MOUNTED HVAC UNIT, SEE MECHANICAL DWGS

100 CFM CEILING MOUNTED EXHAUST FAN. INTERLOCKED WITH LIGHT SWITCH

HM — 4SD J-BOX FOR WATER HEATER LOCATE ABOVE CEILING W/ COVER PLATE, HARD WIRE TO UNIT

4SD J-BOX IN ATTIC FOR ATTIC MOUNTED HEAT DETECTOR (DEVICE BY OTHERS). MAXIMUM 35'-0" FROM ANY POINT IN ATTIC AND 50'-0" BETWEEN THEM. PROVIDE A 6'-0" CONDUIT FROM EACH J-BOX TO HEAT DETECTOR LOCATION. CONDUIT & CONNECTION TO CEILING DEVICE & DEVICE BY OTHERS (ALARM NOTE #1)

S — 4SD J-BOX IN ATTIC FOR CEILING MOUNTED SMOKE DETECTOR (DEVICE BY OTHERS). MAXIMUM 21'-0" FROM ANY POINT IN ROOM BUT NOT MORE THAN 15'-0" TO A PERPENDICULAR WALL AND 30'-0" BETWEEN THEM. PROVIDE A 6'-0" CONDUIT FROM EACH J-BOX TO SMOKE DETECTOR LOCATION. CONDUIT & CONNECTION TO CEILING DEVICE & DEVICE BY OTHERS (ALARM NOTE #1)

RECESSED 4SD J-BOX W/ COVER PLATE FOR FUTURE FIRE ALARM SYSTEM BY OTHERS. MOUNT AT +18" AFF U.O.N. TO CENTERLINE OF BOX AND PROVIDE 1" CO STUB TO ATTIC SPACE WITH PULLSTRING

4SD J-BOX FOR EXTERIOR FIRE ALARM HORN (DEVICE BY OTHERS). MOUNT AT +90" AFF TO TOP OF DEVICE WITH 3/4" CONDUIT STUBBED TO ATTIC WITH PULLSTRING

4SD J-BOX FOR FIRE ALARM STROBE (DEVICE BY OTHERS). BOTTOM OF LENS 80" MIN TOP OF LENS 96" MAX AFF WITH 3/4"CONDUIT TO EXTERIOR FIRE ALARM HORN WITH PULLSTRING

4SD J-BOX FOR FIRE ALARM PULLSTATION (DEVICE BY OTHERS). MOUNT AT +48" AFF TO TOP OF CONTROL BOX WITH 3/4" CONDUIT TO FIRE ALARM STROBE WITH PULLSTRING

EXIT — EXIT SIGN WITH BATTERY BACK UP. EXIT SIGN REQUIRED FOR CLASSROOMS WITH TWO OR MORE EXTERIOR DOORS. CLASSROOMS WITH ONE EXTERIOR DOOR-OPTIONAL.

CLOCK OUTLET AT +90" AFF TO CENTERLINE OF DEVICE

EXTERIOR LED LIGHT FIXTURE. 30w MAX WITH . 90 MIN BACKUP BATTERY MOUNT AT +93" AFF

ROOF — ROOF MOUNTED WEATHER PROOF GFI RECEPTACLE

GFI — GROUND FAULT CIRCUIT INTERRUPT RECEPTACLE WITHIN 6'-0" OF ALL SINKS

WP — EXTERIOR WEATHER PROOF GFI RECEPTACLE AT +24" AFF FOR A/C SERVICES (MAX 25'-0" FROM UNITS)

DUPLEX (WALL MOUNTED) RECEPTACLE 15A-125V-3 WIRE. MOUNT AT +15" AFF U.O.N. TO BOTTOM OF OUTLET BOX

MIN. + 15" TO BOTTOM OF BOX

$3 — 3-WAY LIGHT SWITCH. MOUNT AT+48" AFF TO TOP OF SWITCH BOX

$ — LIGHT SWITCH. MOUNT AT+48" AFF TO TOP OF SWTICH BOX

$D — SINGLE BUTTON DIMMER SWITCH, AT +48" AFF, TO TOP OF SWITCH BOX, WATTSTOPPER #LMDM-101 OR EQUAL

WS-1 — SINGLE SWITCH WALL OCCUPANCY SENSOR. WATTSTOPPER PW-100 OR EQUAL. SENSOR TO BE MOUNTED AT +44" AFF AND USE FOR OPEN ROOM (OR RESTROOM) LESS THAN 100 SQ FT W/ (1) CIRCUIT.

US — ULTRASONIC CEILING OCCUPANCY SENSOR. WATTSTOPPER W-500A OR EQUAL. SENSOR TO BE CONNECTED TO KEYED LIGHT SWITCHES FOR MANUAL OVERRIDE AND USE FOR RESTROOM W/ PARTITIONS.

PC — CEILING MOUNTED PHOTOCELL, WATTSTOPPER #LMLS-500 OR EQUAL

OS — CEILING MOUNTED OCCUPANCY SENSOR. WATTSTOPPER #LMPC-100 OR EQUAL.

C — CARBON MONOXIDE PER CBC SECTION 915

2x4 CEILING LIGHT WITH (3) T-8 LAMPS, LAY-IN FLUORESCENT LIGHT FIXTURE WITH DIMMABLE BALLAST
ORACLE LIGHTING MODEL: 24-OT-3-32-T8-A12-L41K-C4
WATTAGE: 96W (3 LAMPS/32W/T8) OR EQUAL

2x4 CEILING LIGHT WITH (3) T-8 LAMPS, LAY-IN FLUORESCENT LIGHT FIXTURE WITH DIMMABLE BALLAST
ORACLE LIGHTING MODEL: 24-OT-3-32-T8-EMG-T8-BX-600-A12-L41K-C4
WATTAGE: 96W (3 LAMPS/32W/T8) OR EQUAL
EACH LIGHT FIXTURE WHICH IS INDICATED AS BEING AN EMERGENCY LIGHT SHALL HAVE A BALLAST BATTERY PACK INSTALLED ON THE FIXTURE. THE BATTERY PACK SHALL PROVIDE POWER TO A SINGLE LAMP WITHIN THE FIXTURE FOR NO LESS THAN 90 MINUTES. ANY LIGHT FIXTURE Equipped WITH A BATTERY PACK SHALL BE WIRED IN SUCH A MANNER THAT THE BATTERY WILL BE ACTIVATED IMMEDIATELY UPON LOSS OF POWER TO THE FIXTURE. ADDITIONALLY THE BATTERY PACK SHALL BE OPERATED USING BATTERY POWER LIGHTING CONTROL SWITCHES AND SENSORS SHALL NOT BE ABLE TO SHUT THE FIXTURE OFF.
SHALL COMPLY W/ CEC 700.12

NOTE: SEE 4/A3.2 FOR PHOTOMETRIC DATA

3 1" = 1'-0"
LEGEND

IDENTIFICATION STAMP
DIV. OF THE STATE ARCHITECT
APP: 01-119031 INC:
REVIEWED FOR
SS ☑ FLS ☑ ACS ☑
DATE: 10/22/2020

PROFESSIONAL STAMP

REGISTERED PROFESSIONAL ENGINEER MANNY D. FRANCISCO No.38347 STRUCTURAL STATE OF CALIFORNIA

12/19/2017

THE PLANS, IDEAS & DESIGNS SHOWN ON THESE DRAWINGS ARE THE PROPERTY OF R&S TAVARES ASSOCIATES, INC. DEVISED SOLELY FOR THIS CONTRACT. THESE PLANS SHALL NOT BE USED, IN WHOLE OR IN PART, FOR ANY PURPOSE FOR WHICH THEY WERE NOT INTENDED WITHOUT THE EXPRESS WRITTEN CONSENT OF R&S TAVARES ASSOCIATES, INC. ©

CLIENT

CLASS LEASING LLC
1221 Harley Knox Boulevard
Perris, CA 92571

ORIGINAL PC STATE AGENCY APPROVAL

FILE NUMBER: PC-128
IDENTIFICATION STAMP
DIVISION OF THE STATE ARCHITECT
04 - 116504 INCR: 0
AC RM FLS EA SSR KER
DATE 07/19/2018

PROJECT TITLE
24' x 40'
EXPANDABLE TO
120' x 40'

PRE-CHECK (PC) DOCUMENT
Code: [2016] CBC
A separate project application for construction is required.

PROJECT SPECIFIC STATE AGENCY APPROVAL

Revision Schedule

#	Description	Date

SHEET TITLE
ELECTRICAL SCHEDULES 24x40

PROJECT NUMBER
17016A

DRAWN BY
rMc/SC

CHECKED BY
JA/RT

DATE
2017/06/05

SHEET NO.
E1.1

SHEET OF SHEETS

12/18/2017 3:38:26 PM C:\Users\Sarah\Documents\17016 - Aries, 24x40 PC - MainFile - Low Seismic_Sarah.rvt

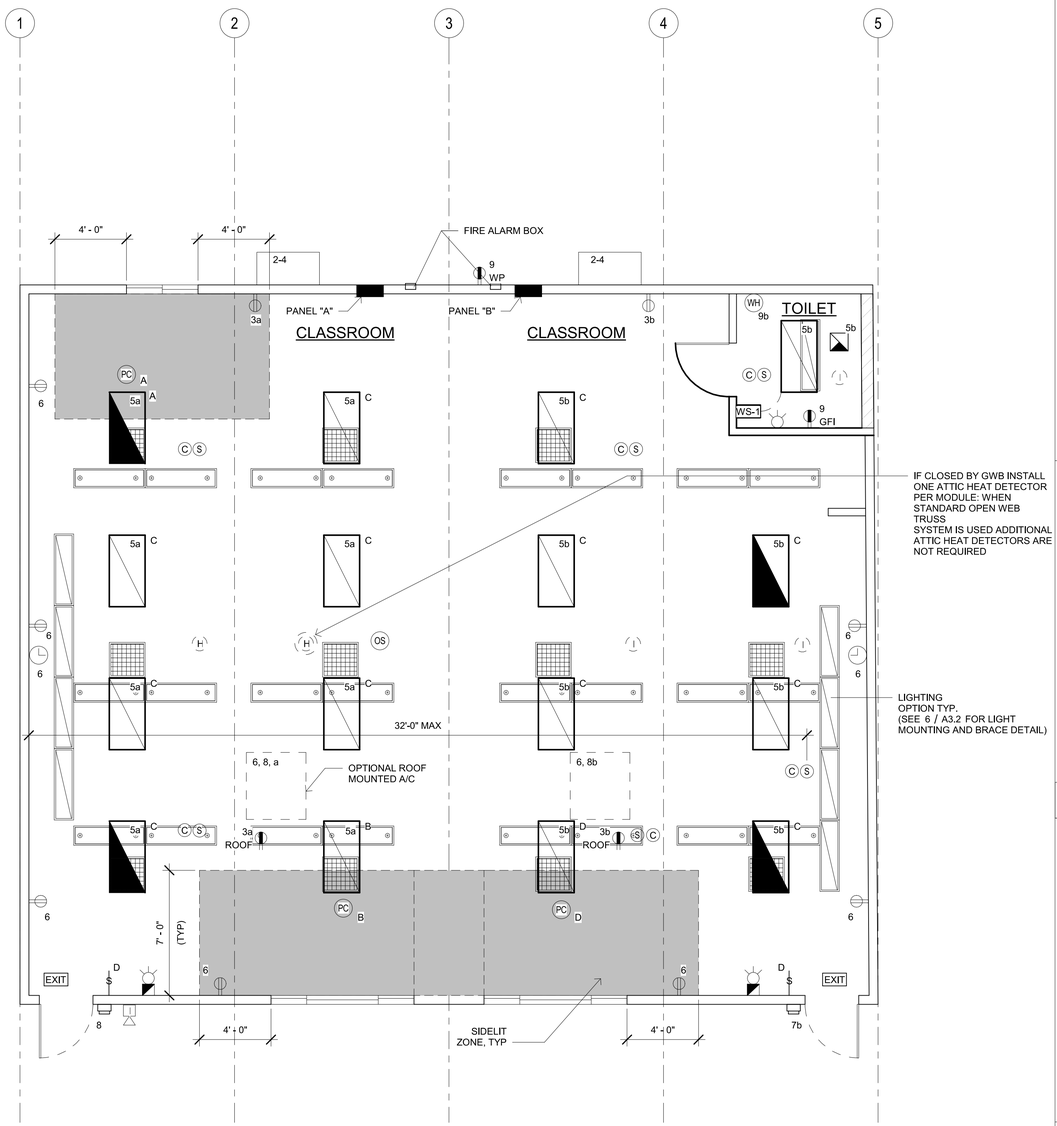

NOTE: PROVIDE A MINIMUM OF 72 SF SOLAR READY AREA PER MODULE. AREA TO BE A MINIMUM OF 5' IN ANY DIRECTION WITH A MINIMUM SPACE OF 80 SF PER BUILDING.

SEE ALT SHEETS FOR FLOOR CONFIGURATION

1 *1/4" = 1'-0"*
ELECTRICAL PLAN

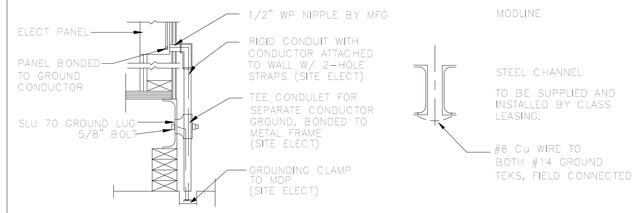

NOTES:

1. BOND SEPARATE CONDUCTORS FROM GROUND ROD TO ELEC'L. PANEL & TO METAL BUILDING FRAME (CEC 250.52) IN ADDITION TO THE DETAIL SHOWN ABOVE. BOND THE ELECTRICAL GROUND TO METAL UNDERGROUND WATER PIPE IN DIRECT CONTACT WITH THE EARTH FOR 10 FT. OR MORE, IF AVAILABLE (CEC 250.52)

2. CHECK RESISTANT TO GROUND ROD. IF RESISTANCE EXCEEDS 25 OHMS. INSTALL ADDITIONAL GROUND RODS WITH CONDUCTORS AS SHOWN SEPARATED AT LEAST 6'-0" UNTIL RESISTANCE IS REDUCED TO 25 OHMS OR LESS (CEC 250.56).

3. ELEC. TRADE SHALL CHECK AREA FOR EXISTING CONDUITS, SEWER, GAS & WATER PIPING BEFORE DRIVING GROUND RODS.

4. ALL MODULES OF STEEL FRAME BLDGS. SHALL BE ELECTRICALLY BONDED TOGETHER (BOLTING ONLY IS NOT ACCEPTABLE BONDING). BONDING SHALL INCLUDE METAL RAMP & STAIRS.

5. SIZE OF CONDUCTORS SHALL COMPLY WITH CEC TABLE 250.66

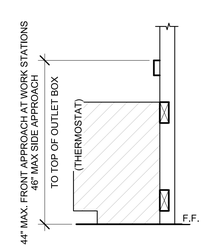

3 *1" = 1'-0"*
ELEV. @ WORKSTATION

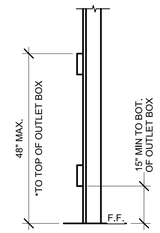

* 30"x48" MIN CLR FLOOR SPACE AT EACH LOCATION FOR PERPENDICULAR APPROACH

4 *1" = 1'-0"*
MOUNTING ELEV.

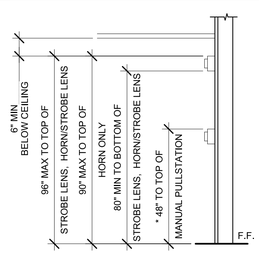

* PROVIDE MIN 30"x48" CLR FLOOR SPACE FOR PERPENDICULAR APPROACH AT EACH LOCATION

THE SWITCH OR SWITCHES INSTALLED IN EMERGENCY LIGHTING CIRCUITS SHALL BE SO ARRANGED THAT ONLY AUTHORIZED PERSONNEL WILL HAVE CONTROL OF EMERGENCY LIGHTING. (CEC art. 700.20)

GENERAL GROUNDING NOTES

EACH BUILDING SHALL BE GROUNDED SEPARARELY WITH A ¾" ROUND X 8 FEET COPPERCLAD STEEL GROUND ROD. WHERE ROCK BOTOOM IS FOUND, DRIVE ROD AT 45 DEGREES MAXIMUM FROM THE VERTICAL OR HAVE IT BURIED IN A TRENCH 30" DEEP MINIMUM.

TESTING FOR RESISTANCE TO GROUND. IF RESISTANCE EXCEEDS 25 OHMS INSTALL ADDITIONAL GROUND RODS SEPARATED AT LEAST 6 FEET, UNTIL RESISTANCE REDUCES TO 25 OHMS OR LESS. GROUND TEST MUST BE DONE IN THE PRESENCE OF THE PROJECT INSPECTOR AND ALL GROUNDING SHALL BE IN ACCORDANCE WITH CEC ARTICLE 250

EQUIPMENT ANCHORAGE

ALL MECHANICAL, PLUMBING AND ELECTRICAL COMPONENTS SHALL BE ANCHORED AND INSTALLED PER THE DETAILS ON THE DSA APPROVED CONSTRUCTION DOCUMENTS. WHERE NO DETAIL IS INDICATED, THE FOLLOWING COMPONENTS SHALL BE ANCHORED OR BRACED TO MEET THE FORCE AND DISPLACEMENT REQUIREMENTS PRESCRIBED IN THE 2013 CBC, SECTIONS 1616A.1.18 THROUGH 1616A.1.26 AND ASCE 7-10 CHAPTER 13, 26 AND 30.

1. ALL PERMANENT EQUIPMENT AND COMPONENTS.
2. TEMPORARY OR MOVABLE EQUIPMENT THAT IS PERMANENTLY ATTACHED (E.G. HARD WIRED) TO THE BUILDING UTILITY SERVICES SUCH AS ELECTRICITY, GAS OR WATER.
3. MOVABLE EQUIPMENT WHICH IS STATIONED IN ONE PLACE FOR MORE THAN 8 HOURS AND HEAVIER THAN 400 POUNDS ARE REQUIRED TO BE ANCHORED WITH TEMPORARY ATTACHMENTS.

THE ATTACHMENT OF THE FOLLOWING MECHANICAL AND ELECTRICAL COMPONENTS SHALL BE POSITIVELY ATTACHED TO THE STRUCTURE, BUT NEED NOT BE DETAILED ON THE PLANS. THESE COMPONENTS SHALL HAVE FLEXIBLE CONNECTIONS PROVIDED BETWEEN THE COMPONENT AND ASSOCIATED DUCTWORK, PIPING, AND CONDUIT.

A. COMPONENTS WEIGHING LESS THAN 400 POUNDS AND HAVE A CENTER OF MASS LOCATED 4 FEET OR LESS ABOVE THE ADJACENT FLOOR OR ROOF LEVEL THAT DIRECTLY SUPPORT THE COMPONENT.
B. COMPONENTS WEIGHING LESS THAN 20 POUNDS, OR IN THE CASE OF DISTRIBUTED SYSTEMS, LESS THAN 5 POUNDS PER FOOT, WHICH ARE SUSPENDED FROM A ROOF OR FLOOR OR HUNG FROM A WALL.

FOR THOSE ELEMENTS THAT DO NOT REQUIRE DETAILS ON THE APPROVED DRAWINGS, THE INSTALLATION SHALL BE SUBJECT TO THE APPROVAL OF THE STRUCTURAL ENGINEER OF RECORD AND THE DSA DISTRICT STRUCTURAL ENGINEER. THE PROJECT INSPECTOR WILL VERIFY THAT ALL COMPONENTS AND EQUIPMENT HAVE BEEN ANCHORED IN ACCORDANCE WITH ABOVE REQUIREMENTS.

PIPING, DUCTWORK AND ELECTRICAL SYSTEM BRACING OF

PIPING, DUCTWORK AND ELECTRICAL DISTRIBUTION SYSTEMS SHALL BE BRACED TO COMPLY WITH THE FORCES AND DISPLACEMENTS PRESCRIBED IN ASCE 7-10 SECTION 13.3 AS DEFINED IN ASCE 7-10 SECTION 13.6.8, 13.6.7, 13.6.5.6 AND 2013 CBC SECTIONS 1616A.1.23, 1616A.1.24, 1616A.1.25 AND 1616A.1.26

THE BRACING AND ATTACHMENTS TO THE STRUCTURE SHALL BE DETAILED ON THE APPROVED DRAWINGS OR THEY SHALL COMPLY WITH ONE OF THE OSHPD PRE-APPROVALS (OPA #) AS MODIFIED TO SATISFY ANCHORAGE REQUIREMENTS OF ACI 318, APPENDIX D.

COPIES OF THE MANUAL SHALL BE AVAILABLE ON THE JOBSITE PRIOR TO THE START OF HANGING AN BRACING OF THE PIPE, DUCTWORK AND ELECTRICAL DISTRIBUTION SYSTEMS.

THE STRUCTURAL ENGINEER OF RECORD SHALL VERIFY THE ADEQUACY OF THE STRUCTURE TO SUPPORT THE HANGER AND BRACE LOADS.

FIRE ALARM NOTES

PROVIDE SPACE ON ELECTRICAL PANEL FOR LOCK-ON BREAKER. IDENTIFIED WITH RED MARKING, FOR 120 VOLTS FIRE ALARM CIRCUIT, WITH BREAKER LABELED AS FIRE ALARM CIRCUIT, CEC 760.41 (B).
BREAKER AND CIRCUIT PROVIDED AND INSTALLED ON SITE BY OTHERS.

SMOKE AND HEAT DETECTOR CONDUIT AND DEVICES TO BE PROVIDED AND INTERCONNECTED TO THE FIRE ALARM SYSTEMS ON SITE BY OTHERS

APPROVAL OF THIS PLAN DOES NOT CONSTITUTE APPROVAL OF THIS FIRE ALARM SYSTEM FOR ALL SITES. THE FIRE ALARM SYSTEM AND COMPONENTS MAYBE REQUIRED TO BE CHANGED DUE TO EXISTING CONDITIONS OR INCOMPATIBLE COMPONENTS.

CONDUIT FILL AND CONDUCTOR CAPACITY TABLE

(ALL CONDUCTORS SHALL BE TYPE THHN/THWN 75 DEG. C. COPPER)

WIRE SIZE	CAPACITY	WIRE TYPE	NO. OF CONDUCTOR 1/2" C	3/4" C	MITT 1" C	1 1/4" C
#12	20A	THHN	9	16	25	45
#10	30A	THHN	5	10	16	28
#8	45A	THHN	2	5	8	14
#6	65A	THHN	1	3	5	10
#4	85A	THHN	1	2	4	7

JUNCTION BOX SIZE TABLE

BOX	SIZE	CU. IN.	MAX NO. OF CONDUCTORS #12	#10	#8	#6
4SS	1 1/4"x4" SQ	18.0	8	7	6	0
4S	1 1/2"x4" SQ	21.0	9	8	7	0
4SD	2 1/8"x4" SQ	30.3	13	12	10	6
4SX	2 7/8"x4" SQ	43.5	23	21	17	10
5SD	2 1/8"x4-11/16" SQ	42.0	18	16	14	6
5SX	3 7/8"x4-11/16" SQ	86.0	38	34	28	17
664	4"x6" SQ	144.0	64	57	48	28

* DEDUCT ONE CONDUCTOR FOR (1) OR MORE GROUNDING CONDUCTORS ENTERING THE BOX

IDENTIFICATION STAMP
DIV. OF THE STATE ARCHITECT
APP: 01-119031 INC:
REVIEWED FOR
SS ☑ FLS ☑ ACS ☑
DATE: 10/22/2020

PROFESSIONAL STAMP

REGISTERED PROFESSIONAL ENGINEER MANNY D. FRANCO C-24380 STRUCTURAL STATE OF CALIFORNIA

12/19/2017

THE PLANS, IDEAS & DESIGNS SHOWN ON THESE DRAWINGS ARE THE PROPERTY OF R&S TAVARES ASSOCIATES, INC. DEVISED SOLELY FOR THIS CONTRACT. THESE PLANS SHALL NOT BE USED, IN WHOLE OR IN PART, FOR ANY PURPOSE FOR WHICH THEY WERE NOT INTENDED WITHOUT THE EXPRESS WRITTEN CONSENT OF R&S TAVARES ASSOCIATES, INC. ©

CLIENT

CLASS LEASING LLC
1221 Harley Knox Boulevard
Perris, CA 92571

ORIGINAL PC STATE AGENCY APPROVAL
FILE NUMBER: PC-128
IDENTIFICATION STAMP
DIVISION OF THE STATE ARCHITECT
04 - 116504 INCR: 0
AC RM FLS EA SSR KER
DATE 07/19/2018

PROJECT TITLE
24' x 40'
EXPANDABLE TO
120' x 40'

PRE-CHECK (PC) DOCUMENT
Code: [2016] **CBC**
A separate project application for construction is required.

PROJECT SPECIFIC STATE AGENCY APPROVAL

Revision Schedule

#	Description	Date

SHEET TITLE
ELECTRICAL PLAN
48x40

PROJECT NUMBER
17016A

DRAWN BY
rMc/SC

CHECKED BY
JA/RT

DATE
2017/06/05

SHEET NO.
E1.4

SHEET OF SHEETS

1/4/2018 2:43:52 PM C:\Users\Lee\Documents\17016 - Aries, 24x40 PC - MainFile - Low Seismic_Lee.rvt

PANEL A= 100A	120/208 VOLTS,1 ϕ, 3 WIRE					MAIN LUGS ONLY				
	LOADCENTER	RECESSED MOUNTED						GRD & NEUTRAL BARS		AMP BUS
	VOLTAMPS		10000 AIC					VOLTAMPS		
DESCRIPTION	ϕA	ϕB	C/B	CKT	ϕ	CKT	C/B	ϕA	ϕB	DESCRIPTION
AC WALL MOUNTED- 4 TON	7360		30	1	A	2	20	1080		OUTLETS
		7360	30	3	B	4	20		180	EXTERIOR GFI WP/GC
GENERAL LIGHTING/FAN	1536		20	5	A	6	20	180		ROOF GFI WPGC
EXTERIOR LIGHTING		40	20	7	B	8	20			
			20	9	B	10	20			
DED SOLAR READY										
DED SOLAR READY										
SUBTOTAL	ϕA 8560	ϕB 7400						ϕA 1260	ϕB 180	SUBTOTAL
TOTAL	9820	7580	9820/120 VOLTS= 81.84 A 81.84 + 1.07= 91.91							

2 1" = 1'-0"
ELECTRICAL PANEL_A

PANEL A= 100A	120/208 VOLTS, 3 ϕ, 3 WIRE					MAIN LUGS ONLY				
	LOADCENTER	SURFACE MOUNTED						GRD & NEUTRAL BARS		AMP BUS
	VOLTAMPS		10000 AIC					VOLTAMPS		
DESCRIPTION	ϕA	ϕB	C/B	CKT	ϕ	CKT	C/B	ϕA	ϕB	DESCRIPTION
AC ROOF MOUNTED- 4 TON	7360		30	1	A	2	20	1080		OUTLETS
		7360	30	3	B	4	20		180	EXTERIOR GFI WP/GC
GENERAL LIGHTING/FAN	1536		20	5	A	6	20	180		ROOF GFI WPGC
EXTERIOR LIGHTING		40	20	7	B	8	20			
BATH GFI	180		20	9	B	10	20			
DED SOLAR READY										
DED SOLAR READY										
SUBTOTAL	ϕA 8560	ϕB 7400						ϕA 1260	ϕB 180	SUBTOTAL
TOTAL	9820	7580	9820/120 VOLTS= 81.84 A 81.84 + 1.07= 91.91							

3 1" = 1'-0"
ELECTRICAL PANEL_B

LEGEND

ELECTRICAL PANEL AT +60" AFF TO TOP OF ELECTRICAL PANEL WITH 1 1/2" DIA POWER STUB OUT

ROOF MOUNTED HVAC UNIT-SEE MECHANICAL DWGS

WALL MOUNTED HVAC UNIT, SEE MECHANICAL DWGS

100 CFM CEILING MOUNTED EXHAUST FAN. INTERLOCKED WITH LIGHT SWITCH

HW — 4SD J-BOX FOR WATER HEATER LOCATE ABOVE CEILING W/ COVER PLATE, HARD WIRE TO UNIT

4SD J-BOX IN ATTIC FOR ATTIC MOUNTED HEAT DETECTOR (DEVICE BY OTHERS). MAXIMUM 35'-0" FROM ANY POINT IN ATTIC AND 50'-0" BETWEEN THEM. PROVIDE A 6'-0" CONDUIT FROM EACH J-BOX TO HEAT DETECTOR LOCATION. CONDUIT & CONNECTION TO CEILING DEVICE & DEVICE BY OTHERS (ALARM NOTE #1)

S — 4SD J-BOX IN ATTIC FOR CEILING MOUNTED SMOKE DETECTOR (DEVICE BY OTHERS). MAXIMUM 21'-0" FROM ANY POINT IN ROOM BUT NOT MORE THAN 15'-0" TO A PERPENDICULAR WALL AND 30'-0" BETWEEN THEM. PROVIDE A 6'-0" CONDUIT FROM EACH J-BOX TO SMOKE DETECTOR LOCATION. CONDUIT & CONNECTION TO CEILING DEVICE & DEVICE BY OTHERS (ALARM NOTE #1)

RECESSED 4SD J-BOX W/ COVER PLATE FOR FUTURE FIRE ALARM SYSTEM BY OTHERS. MOUNT AT +18" AFF U.O.N. TO CENTERLINE OF BOX AND PROVIDE 1" CO STUB TO ATTIC SPACE WITH PULLSTRING

4SD J-BOX FOR EXTERIOR FIRE ALARM HORN (DEVICE BY OTHERS). MOUNT AT +90" AFF TO TOP OF DEVICE WITH 3/4" CONDUIT STUBBED TO ATTIC WITH PULLSTRING

4SD J-BOX FOR FIRE ALARM STROBE (DEVICE BY OTHERS). BOTTOM OF LENS 80" MIN TOP OF LENS 96" MAX AFF WITH 3/4"CONDUIT TO EXTERIOR FIRE ALARM HORN WITH PULLSTRING

4SD J-BOX FOR FIRE ALARM PULLSTATION (DEVICE BY OTHERS). MOUNT AT +48" AFF TO TOP OF CONTROL BOX WITH 3/4" CONDUIT TO FIRE ALARM STROBE WITH PULLSTRING

EXIT — EXIT SIGN WITH BATTERY BACK UP. EXIT SIGN REQUIRED FOR CLASSROOMS WITH TWO OR MORE EXTERIOR DOORS. CLASSROOMS WITH ONE EXTERIOR DOOR-OPTIONAL.

CLOCK OUTLET AT +90" AFF TO CENTERLINE OF DEVICE

EXTERIOR LED LIGHT FIXTURE. 30w MAX WITH 90 MIN BACK UP BATTERY MOUNT AT +93" AFF

ROOF — ROOF MOUNTED WEATHER PROOF GFI RECEPTACLE

GFI — GROUND FAULT CIRCUIT INTERRUPT RECEPTACLE WITHIN 6'-0" OF ALL SINKS

WP — EXTERIOR WEATHER PROOF GFI RECEPTACLE AT +24" AFF FOR A/C SERVICES (MAX 25'-0" FROM UNITS)

DUPLEX (WALL MOUNTED) RECEPTACLE 15A-125V-3 WIRE. MOUNT AT +15" AFF U.O.N. TO BOTTOM OF OUTLET BOX

MIN. + 15" TO BOTTOM OF BOX

$3 — 3-WAY LIGHT SWITCH. MOUNT AT+48" AFF TO TOP OF SWITCH BOX

$ — LIGHT SWITCH. MOUNT AT+48" AFF TO TOP OF SWTICH BOX

$D — SINGLE BUTTON DIMMER SWITCH, AT +48" AFF, TO TOP OF SWITCH BOX. WATTSTOPPER #LMDM-101 OR EQUAL

WS-1 — SINGLE SWITCH WALL OCCUPANCY SENSOR. WATTSTOPPER PW-100 OR EQUAL. SENSOR TO BE MOUNTED AT +44" AFF AND USE FOR OPEN ROOM (OR RESTROOM) LESS THAN 100 SQ FT W/ (1) CIRCUIT.

US — ULTRASONIC CEILING OCCUPANCY SENSOR. WATTSTOPPER W-500A OR EQUAL. SENSOR TO BE CONNECTED TO KEYED LIGHT SWITCHES FOR MANUAL OVERRIDE AND USE FOR RESTROOM W/ PARTITIONS.

PC — CEILING MOUNTED PHOTOCELL, WATTSTOPPER #LMLS-500 OR EQUAL

OS — CEILING MOUNTED OCCUPANCY SENSOR. WATTSTOPPER #LMPC-100 OR EQUAL.

C — CARBON MONOXIDE PER CBC SECTION 915

2x4 CEILING LIGHT WITH (3) T-8 LAMPS. LAY-IN FLUORESCENT LIGHT FIXTURE WITH DIMMABLE BALLAST ORACLE LIGHTING MODEL: 24-OT-3-32-T8-A12-L41K-C4 WATTAGE: 96W (3 LAMPS/32W/T8) OR EQUAL

2x4 CEILING LIGHT WITH (3) T-8 LAMPS. LAY-IN FLUORESCENT LIGHT FIXTURE WITH DIMMABLE BALLAST ORACLE LIGHTING MODEL: 24-OT-3-32-T8-EMG-T8-BX-600-A12-L41K-C4 WATTAGE: 96W (3 LAMPS/32W/T8) OR EQUAL EACH LIGHT FIXTURE WHICH IS INDICATED AS BEING AN EMERGENCY LIGHT SHALL HAVE A BALLAST BATTERY PACK INSTALLED ON THE FIXTURE. THE BATTERY PACK SHALL PROVIDE POWER TO A SINGLE LAMP WITHIN THE FIXTURE FOR NO LESS THAN 90 MINUTES. ANY LIGHT FIXTURE Equipped WITH A BATTERY PACK SHALL BE WIRED IN SUCH A MANNER THAT THE BATTERY WILL BE ACTIVATED IMMEDIATELY UPON LOSS OF POWER TO THE FIXTURE. ADDITIONALLY THE BATTERY PACK SHALL BE OPERATED USING BATTERY POWER LIGHTING CONTROL SWITCHES AND SENSORS SHALL NOT BE ABLE TO SHUT THE FIXTURE OFF.

Show comply w/ CBC 700.20

NOTE: SEE 4/A3.2 FOR PHOTOMETRIC DATA

IDENTIFICATION STAMP
DIV. OF THE STATE ARCHITECT
APP: 01-119031 INC:
REVIEWED FOR
SS ☑ FLS ☑ ACS ☑
DATE: 10/22/2020

PROFESSIONAL STAMP

REGISTERED PROFESSIONAL ENGINEER MANNY D. FRANCO C-43501 STRUCTURAL STATE OF CALIFORNIA

12/19/2017

THE PLANS, IDEAS & DESIGNS SHOWN ON THESE DRAWINGS ARE THE PROPERTY OF R&S TAVARES ASSOCIATES, INC. DEVISED SOLELY FOR THIS CONTRACT. THESE PLANS SHALL NOT BE USED, IN WHOLE OR IN PART, FOR ANY PURPOSE FOR WHICH THEY WERE NOT INTENDED WITHOUT THE EXPRESS WRITTEN CONSENT OF R&S TAVARES ASSOCIATES, INC. ©

CLIENT

CLASS LEASING LLC
1221 Harley Knox Boulevard
Perris, CA 92571

ORIGINAL PC STATE AGENCY APPROVAL

FILE NUMBER: PC-128
IDENTIFICATION STAMP
DIVISION OF THE STATE ARCHITECT
04 - 116504 INCR: 0
AC RM FLS EA SSR KER
DATE 07/19/2018

PROJECT TITLE
24' x 40'
EXPANDABLE TO
120' x 40'

PRE-CHECK (PC) DOCUMENT
Code: [2016] CBC
A separate project application for construction is required.

PROJECT SPECIFIC STATE AGENCY APPROVAL

Revision Schedule

#	Description	Date

SHEET TITLE
ELECTRICAL SCHEDULE 48x40

PROJECT NUMBER
17016A

DRAWN BY
rMc/SC

CHECKED BY
JA/RT

DATE
2017/06/05

SHEET NO.
E1.5

SHEET OF SHEETS

12/18/2017 3:38:30 PM C:\Users\Sarah\Documents\17016 - Aries, 24x40 PC - MainFile - Low Seismic_Sarah.rvt

STATE OF CALIFORNIA
INDOOR LIGHTING
CEC-NRCC-LTI-01-E (Revised 04/16) — CALIFORNIA ENERGY COMMISSION

CERTIFICATE OF COMPLIANCE	NRCC-LTI-01-E
Indoor Lighting	(Page 1 of 6)
Project Name: 120'x40' (PC 04-116504)	Date Prepared: 06/25/2018

A. General Information

Climate Zone:	Conditioned Floor Area: 4800					
	Unconditioned Floor Area:					
Building Type:	☑	Nonresidential	☐	High-Rise Residential	☐	Hotel/Motel
☐ Schools	☑	Relocatable Public Schools	☐	Conditioned Spaces	☐	Unconditioned Spaces
Phase of Construction:	☑	New Construction	☐	Addition	☐	Alteration
Method of Compliance:	☐	Complete Building	☐	Area Category	☐	Tailored
Project Address:						

B. Lighting Compliance Documents (select yes for each document included)

For detailed instructions on the use of this and all Energy Efficiency Standards compliance documents, refer to the Nonresidential Manual published by the California Energy Commission.

YES	NO	COMP. DOC.	TITLE
◉	○	NRCC-LTI-01-E	Certificate of Compliance. All Pages required on plans for all submittals.
◉	○	NRCC-LTI-02-E	Lighting Controls, Certificate of Compliance, and PAF Calculation. All Pages required on plans for all submittals.
◉	○	NRCC-LTI-03-E	Indoor Lighting Power Allowance
○	◉	NRCC-LTI-04-E	Tailored Method Worksheets
○	◉	NRCC-LTI-05-E	Line Voltage Track Lighting Worksheets
○	◉	NRCC-LTI-06-E	Indoor Lighting Existing Conditions

STATE OF CALIFORNIA
INDOOR LIGHTING
CEC-NRCC-LTI-01-E (Revised 04/16) — CALIFORNIA ENERGY COMMISSION

CERTIFICATE OF COMPLIANCE	NRCC-LTI-01-E
Indoor Lighting	(Page 2 of 6)
Project Name: 120'x40' (PC 04-116504)	Date Prepared: 06/25/2018

C. Summary of Allowed Lighting Power

Conditioned and Unconditioned space Lighting must not be combined for compliance

	Indoor Lighting Power for Conditioned Spaces		Watts	Indoor Lighting Power for Unconditioned Spaces		Watts
01	**Installed** Lighting NRCC-LTI-01-E, Table H, page 5	+	3840	**Installed** Lighting NRCC-LTI-01-E, Table H, page 5	+	
02	Portable Only for Offices NRCC-LTI-01-E, Table G, page 4	+				
03	Minus Lighting Control Credits NRCC-LTI-02-E, page 2	-	711	Minus Lighting Control Credits NRCC-LTI-02-E, page 2	-	
04	Adjusted **Installed** Lighting Power (row 1 plus row 2 minus row 3)	=	3129	Adjusted **Installed** Lighting Power (row 1 minus row 3)	=	0
	Complies ONLY if **Installed** ≤ **Allowed** (Box 04 < Box 05)			Complies ONLY if **Installed** ≤ **Allowed** (Box 04 < Box 05)		
05	**Allowed** Lighting Power Conditioned NRCC-LTI-03-E, page 1 Alterations with replacement luminaires that have at least 50/35%lower power compared to the original existing luminaires, may instead use the allowed wattage from NRCC-LTI-06, page 2		5280	**Allowed** Lighting Power Unconditioned NRCC-LTI-03-E, page 1 Alterations with replacement luminaires that have at least 50/35% lower power compared to the original existing luminaires, may instead use the allowed wattage from NRCC-LTI-06, page 2		

D. Declaration of Required Certificates of Installation

Declare by selecting yes for all of the Certificates that will be submitted. (Retain copies and verify forms are completed and signed.)

YES	NO	Form/Title	
◉	○	NRCI-LTI-01-E - Must be submitted for all buildings	☐ Field Inspector
◉	○	NRCI-LTI-02-E - Must be submitted for a lighting control system, or for an Energy Management Control System (EMCS), to be recognized for compliance.	☐ Field Inspector
○	◉	NRCI-LTI-03-E - Must be submitted for a line-voltage track lighting integral current limiter, or for a supplementary overcurrent protection panel used to energize only line-voltage track lighting, to be recognized for compliance.	☐ Field Inspector
○	◉	NRCI-LTI-04-E - Must be submitted for two interlocked systems serving an auditorium, a convention center, a conference room, a multipurpose room, or a theater to be recognized for compliance.	☐ Field Inspector
○	◉	NRCI-LTI-05-E - Must be submitted for a Power Adjustment Factor (PAF) to be recognized for compliance.	☐ Field Inspector
○	◉	NRCI-LTI-06-E - Must be submitted for additional wattage installed in a video conferencing studio to be recognized for compliance.	☐ Field Inspector

STATE OF CALIFORNIA
INDOOR LIGHTING
CEC-NRCC-LTI-01-E (Revised 04/16) — CALIFORNIA ENERGY COMMISSION

CERTIFICATE OF COMPLIANCE	NRCC-LTI-01-E
Indoor Lighting	(Page 3 of 6)
Project Name: 120'x40' (PC 04-116504)	Date Prepared: 06/25/2018

E. Declaration of Required Certificates of Acceptance

Declare by selecting yes for all of the Certificates of Acceptance that will be submitted. (Retain copies and verify forms are completed and signed.)

YES	NO	FORM/TITLE	
◉	○	NRCA-LTI-02-A - Must be submitted for occupancy sensors and automatic time switch controls.	☐ Field Inspector
◉	○	NRCA-LTI-03-A - Must be submitted for automatic daylight controls.	☐ Field Inspector
○	◉	NRCA-LTI-04-A - Must be submitted for demand responsive lighting controls.	☐ Field Inspector
○	◉	NRCA-LTI-05-A - Must be submitted for institutional tuning power adjustment factor (PAF).	

A Separate Lighting Schedule Must Be Filled Out for Conditioned and Unconditioned Spaces. Installed Lighting Power listed on this Lighting Schedule is only for: ☑ **CONDITIONED SPACE** ☐ **UNCONDITIONED SPACE**

F. Indoor Lighting Schedule and Field Inspection Energy Checklist

- ☐ The actual indoor lighting power listed on the next 2 pages includes all installed permanent and planned portable lighting systems.
- ☐ When Complete Building Method is used for compliance, list each different type of luminaire on separate lines.
- ☐ When Area Category Method or Tailored Method is used for compliance, list each different type of luminaire by each different function area on separate lines
- ☐ Also include track lighting in schedule, and submit the track lighting compliance document (NRCC-LTI-05-E) when line-voltage track lighting is installed.

STATE OF CALIFORNIA
INDOOR LIGHTING
CEC-NRCC-LTI-01-E (Revised 04/16) — CALIFORNIA ENERGY COMMISSION

CERTIFICATE OF COMPLIANCE	NRCC-LTI-01-E
Indoor Lighting	(Page 4 of 6)
Project Name: 120'x40' (PC 04-116504)	Date Prepared: 06/25/2018

G. Installed Portable Luminaires in Offices – Exception to Section 140.6(a)

- This section shall be filled out ONLY for portable luminaires in offices (As defined in §100.1). All other planned portable luminaires shall be documented on next page of this compliance document.
- This section is used to determine if greater than 0.3 watts of portable lighting is planned for any office
- Fill out a separate line for each different office. Small offices that are typical (having the same general and portable lighting) may be grouped together. This allowance shall not be traded between offices having different lighting systems.

Office Portable Luminaire Schedule	Office Installed Portable Luminaire W/ft²							Office Location	Field Inspector	
01	02	03	04	05	06	07	08	09	10	
Complete Luminaire Description (i.e., LED, under cabinet, furniture mounted direct/indirect)	Watts per Luminaire	Number of Luminaires	Installed portable luminaire watts in this office (G02 x G03)	Square feet of this office	Watts per square foot (G04 / G05)	If G06 ≤ 0.3, enter zero; If G06 > 0.3, (G06-0.3)	(G05 x G07)	Identify Office area in which these portable luminaires are installed	Pass	Fail
			0				0		○	○
			0				0		○	○
			0				0		○	○
			0				0		○	○
			0				0		○	○
Total installed portable luminaire watts that are greater than 0.3 W/ft² per office:								Enter sum total of all pages into NRCC-LTI-01-E; Page 2		

STATE OF CALIFORNIA
INDOOR LIGHTING
CEC-NRCC-LTI-01-E (Revised 04/16) — CALIFORNIA ENERGY COMMISSION

CERTIFICATE OF COMPLIANCE	NRCC-LTI-01-E
Indoor Lighting	(Page 5 of 6)
Project Name: 120'x40' (PC 04-116504)	Date Prepared: 06/25/2018

A Separate Lighting Schedule Must Be Filled Out for Conditioned and Unconditioned Spaces. Installed Lighting Power listed on this Lighting Schedule is only for:
☑ **CONDITIONED SPACE** ☐ **UNCONDITIONED SPACE**

H. Indoor Lighting Schedule and Field Inspection Energy Checklist

Luminaire Schedule		Installed Watts					Location	Field Inspector[1]	
01	02	03	04		05	06	07	08	
			How wattage was determined						
Name or Item Tag	Complete Luminaire Description (i.e, 3 lamp fluorescent troffer, F32T8, one dimmable electronic ballast)	Watts per Luminaire	CEC Default from M&B	According to §130.6(c)	Number Luminaires	Total Installed Watts in this area (H03 xH05)	Primary Function area in which these luminaires are installed	Pass	Fail
L-1	3-LAMP/32W/T8	96	☑	☐	40	3840		○	○
			☐	☐		0		○	○
			☐	☐		0		○	○
			☐	☐		0		○	○
			☐	☐		0		○	○
			☐	☐		0		○	○
			☐	☐		0		○	○
			☐	☐		0		○	○
			☐	☐		0		○	○
INSTALLED WATTS PAGE TOTAL:						3160	Enter sum total of all pages into NRCC-LTI-01-E; Page 2		

STATE OF CALIFORNIA
INDOOR LIGHTING
CEC-NRCC-LTI-01-E (Revised 04/16) — CALIFORNIA ENERGY COMMISSION

CERTIFICATE OF COMPLIANCE	NRCC-LTI-01-E
Indoor Lighting	(Page 6 of 6)
Project Name: 120'x40' (PC 04-116504)	Date Prepared: 06/25/2018

DOCUMENTATION AUTHOR'S DECLARATION STATEMENT

1. I certify that this Certificate of Compliance documentation is accurate and complete.

Documentation Author Name: RALPH M. TAVARES	Documentation Author Signature:
Company: R&S TAVARES ASSOCIATES, INC.	Signature Date: 06/25/2018
Address: 11777 BERNARDO PLAZA CT. SUITE 105	CEA Certification Identification (if applicable):
City/State/Zip: SAN DIEGO, CA 92128	Phone: 858-444-3344 EXT 1801

RESPONSIBLE PERSON'S DECLARATION STATEMENT

I certify the following under penalty of perjury, under the laws of the State of California:
1. The information provided on this Certificate of Compliance is true and correct.
2. I am eligible under Division 3 of the Business and Professions Code to accept responsibility for the building design or system design identified on this Certificate of Compliance (responsible designer).
3. The energy features and performance specifications, materials, components, and manufactured devices for the building design or system design identified on this Certificate of Compliance conform to the requirements of Title 24, Part 1 and Part 6 of the California Code of Regulations.
4. The building design features or system design features identified on this Certificate of Compliance are consistent with the information provided on other applicable compliance documents, worksheets, calculations, plans and specifications submitted to the enforcement agency for approval with this building permit application.
5. I will ensure that a completed signed copy of this Certificate of Compliance shall be made available with the building permit(s) issued for the building, and made available to the enforcement agency for all applicable inspections. I understand that a completed signed copy of this Certificate of Compliance is required to be included with the documentation the builder provides to the building owner at occupancy.

Responsible Designer Name: MANNY D. FRISCH	Responsible Designer Signature:
Company : R&S TAVARES ASSOCIATES, INC.	Date Signed: 06/25/2018
Address: 11777 BERNARDO PLAZA CT. SUITE 105	License: S3380
City/State/Zip: SAN DIEGO, CA 91218	Phone: 858 444 3344 EXT 1810

STATE OF CALIFORNIA
INDOOR LIGHTING – LIGHTING CONTROLS
CEC-NRCC-LTI-02-E (Revised 01/16) — CALIFORNIA ENERGY COMMISSION

CERTIFICATE OF COMPLIANCE	NRCC-LTI-02-E
Indoor Lighting - Lighting Controls	(Page 1 of 3)
Project Name: 120'X40' (PC 04-116504)	Date Prepared: 06/25/2018

A. Mandatory Lighting Control Declaration Statements (Indicate if the measure applies by checking yes or no below.)

YES	NO	Control Requirements
◉	○	Lighting shall be controlled by self-contained lighting control devices which are certified to the Energy Commission according to the Title 20 Appliance Efficiency Regulations in accordance with Section 110.9.
◉	○	Lighting shall be controlled by a lighting control system or energy management control system in accordance with §110.9. An Installation Certificate shall be submitted in accordance with Section 130.4(b).
○	◉	One or more Track Lighting Integral Current Limiters shall be installed which have been certified to the Energy Commission in accordance with §110.9 and §130.0. Additionally, an Installation Certificate shall be submitted in accordance with Section 130.4(b).
○	◉	A Track Lighting Supplementary Overcurrent Protection Panel shall be installed in accordance with Section 110.9 and Section 130.0. Additionally, an Installation Certificate shall be installed in accordance with Section 130.4(b).
◉	○	All lighting controls and equipment shall comply with the applicable requirements in §110.9 and shall be installed in accordance with the manufacturer's instructions in accordance with Section 130.1.
◉	○	All luminaires shall be functionally controlled with manual ON and OFF lighting controls in accordance with Section 130.1(a).
○	◉	General lighting shall be separately controlled from all other lighting systems in an area. Floor and wall display, window display, case display, ornamental, and special effects lighting shall each be separately controlled on circuits that are 20 amps or less. When track lighting is used, general, display, ornamental, and special effects lighting shall each be separately controlled; in accordance with Section 130.1(a)4.
◉	○	The general lighting of any enclosed area 100 square feet or larger, with a connected lighting load that exceeds 0.5 watts per square foot shall meet the multi-level lighting control requirements in accordance with Section 130.1(b).
◉	○	All installed indoor lighting shall be equipped with controls that meet the applicable Shut-OFF control requirements in Section 130.1(c).
◉	○	Lighting in all Daylit Zones shall be controlled in accordance with the requirements in Section 130.1(d) and daylit zones are shown on the plans.
○	◉	Lighting power in buildings larger than 10,000 square feet shall be capable of being automatically reduced in response to a Demand Responsive Signal in accordance with Section 130.1(e).
◉	○	Before an occupancy permit is granted for a newly constructed building or area, or a new lighting system serving a building, area, or site is operated for normal use, indoor lighting controls serving the building, area, or site shall be certified as meeting the Acceptance Requirements for Code Compliance in accordance with Section 130.4.(a). The controls required to meet the Acceptance Requirements include automatic daylight controls, automatic shut-OFF controls, and demand responsive controls.

STATE OF CALIFORNIA
INDOOR LIGHTING – LIGHTING CONTROLS
CEC-NRCC-LTI-02-E (Revised 01/16) — CALIFORNIA ENERGY COMMISSION

CERTIFICATE OF COMPLIANCE	NRCC-LTI-02-E
Indoor Lighting - Lighting Controls	(Page 2 of 3)
Project Name: 120'X40' (PC 04-116504)	Date Prepared: 06/25/2018

A separate document must be filled out for Conditioned and Unconditioned Spaces. This page is used only for the following:
☑ CONDITIONED SPACES ☐ UNCONDITIONED SPACES

B. Mandatory and Prescriptive Indoor Lighting Control Schedule, PAF Calculation, and Field Inspection Checklist

Lighting Control Schedule			Standards Complying With[1] (✓ all that apply, or leave empty if Exempted)							PAF Credit Calculation[2]			✓ if Acceptance Test Required	Field Inspector	
01	02	03	04	05	06	07	08	09	10	11	12	13	14	15	
Location in Building	Type/ Description of Lighting Control (i.e.: occupancy sensor, automatic time switch, dimmer, automatic daylight, etc…)	# of Units	§130.1(a)	§130.0(b)	§130.1(c)	§130.1(d)	§130.1(e)	§140.6(a)2	§140.6(d)	Watts of Controlled Lighting	PAF	Control Credit (11 x 12)	Control Credit Test Required	Pass	Fail
CLASSROOM	AUTOMATIC DAYLIGHT	10	◆	◆	◆	◆		◆		790	.10	79	☐	○	○
CLASSROOM	OCCUPANCY SENSOR	3	◆	◆	◆	◆		◆		3160	.20	632	☐	○	○
												0	☐	○	○
												0	☐	○	○
												0	☐	○	○
												0	☐	○	○
												0	☐	○	○
Control Credit PAGE TOTAL (Sum of Column 13):												711			
IF MULTIPLE PAGES ARE USED, ENTER SUM TOTAL OF Control Credit for all pages HERE (Sum of all Column 13):															
												Enter Control Credit total into NRCC-LTI-01-E; Page 1.			

1. §130.1(a) = Manual area controls; §130.0(b) = Multi Level; §130.1(c) = Auto Shut-Off; §130.1(d) = Mandatory Daylight; §130.1(e) = Demand Responsive; §140.6(d) = Additional lighting controls installed to earn a PAF; §140.6(d) = Prescriptive Secondary Sidelit Daylight Controls.
2. Check Table 140.6-A for correct Factor. PAFs shall not be traded between conditioned and unconditioned spaces. As a condition to earn a PAF, an Installation Certificate is also required to be filled out, signed, and submitted.

STATE OF CALIFORNIA
INDOOR LIGHTING – LIGHTING CONTROLS
CEC-NRCC-LTI-02-E (Revised 01/16) — CALIFORNIA ENERGY COMMISSION

CERTIFICATE OF COMPLIANCE	NRCC-LTI-02-E
Indoor Lighting - Lighting Controls	(Page 3 of 3)
Project Name: 120'X40' (PC 04-116504)	Date Prepared: 06/25/2018

DOCUMENTATION AUTHOR'S DECLARATION STATEMENT

1. I certify that this Certificate of Compliance documentation is accurate and complete.

Documentation Author Name: RALPH M. TAVARES	Documentation Author Signature:
Company: R&S TAVARES ASSOCIATES, INC.	Signature Date: 06/25/2018
Address: 11777 BERNARDO PLAZA CT. SUITE 105	CEA Certification Identification (if applicable):
City/State/Zip: SAN DIEGO, CA 92128	Phone: 858 444 3344 EXT 1801

RESPONSIBLE PERSON'S DECLARATION STATEMENT

I certify the following under penalty of perjury, under the laws of the State of California:
1. The information provided on this Certificate of Compliance is true and correct.
2. I am eligible under Division 3 of the Business and Professions Code to accept responsibility for the building design or system design identified on this Certificate of Compliance (responsible designer).
3. The energy features and performance specifications, materials, components, and manufactured devices for the building design or system design identified on this Certificate of Compliance conform to the requirements of Title 24, Part 1 and Part 6 of the California Code of Regulations.
4. The building design features or system design features identified on this Certificate of Compliance are consistent with the information provided on other applicable compliance documents, worksheets, calculations, plans and specifications submitted to the enforcement agency for approval with this building permit application.
5. I will ensure that a completed signed copy of this Certificate of Compliance shall be made available with the building permit(s) issued for the building, and made available to the enforcement agency for all applicable inspections. I understand that a completed signed copy of this Certificate of Compliance is required to be included with the documentation the builder provides to the building owner at occupancy.

Responsible Designer Name: MANNY D. FRISCH	Responsible Designer Signature:
Company : R&S TAVARES ASSOCIATES, INC.	Date Signed: 06/25/2018
Address: 11777 BERNARDO PLAZA CT. SUITE 105	License: S3380
City/State/Zip: SAN DIEGO, CA 92128	Phone: 858 444 3344 EXT 1810

APPROVED
DIVISION OF STATE ARCHITECT
HIGH PERFORMANCE SECTION
APP.# 04-116504 DATE: 7-10-18

IDENTIFICATION STAMP
DIV. OF THE STATE ARCHITECT
APP: 01-119031 INC:
REVIEWED FOR
SS ☑ FLS ☑ ACS ☑
DATE: 10/22/2020

PROFESSIONAL STAMP
REGISTERED PROFESSIONAL ENGINEER MANNY D. FRISCH S3380 STRUCTURAL STATE OF CALIFORNIA
12/19/2017

THE PLANS, IDEAS & DESIGNS SHOWN ON THESE DRAWINGS ARE THE PROPERTY OF R&S TAVARES ASSOCIATES, INC. DEVISED SOLELY FOR THIS CONTRACT. THESE PLANS SHALL NOT BE USED, IN WHOLE OR IN PART, FOR ANY PURPOSE FOR WHICH THEY WERE NOT INTENDED WITHOUT THE EXPRESS WRITTEN CONSENT OF R&S TAVARES ASSOCIATES, INC. ©

CLIENT
CLASS LEASING LLC
1221 Harley Knox Boulevard
Perris, CA 92571

ORIGINAL PC STATE AGENCY APPROVAL
FILE NUMBER: PC-128
IDENTIFICATION STAMP
DIVISION OF THE STATE ARCHITECT
04 - 116504 INCR: 0
AC RM FLS EA SSR KER
DATE 07/19/2018

PROJECT TITLE
24' x 40' EXPANDABLE TO 120' x 40'

PRE-CHECK (PC) DOCUMENT
Code: [2016] **CBC**
A separate project application for construction is required.

PROJECT SPECIFIC STATE AGENCY APPROVAL

Revision Schedule

#	Description	Date

SHEET TITLE
120'x40' T24 CZ 16 (WALL AC)

PROJECT NUMBER
17016A

DRAWN BY
rMc/SC

CHECKED BY
JA/RT

DATE
2018/06/26

SHEET NO.
E2.1

SHEET OF SHEETS

3/8/2018 2:19:39 PM C:\Users\Andrew\Documents\17016 - Aries, 24x40 PC - MainFile - Low Seismic_Andrew.rvt

STATE OF CALIFORNIA
OUTDOOR LIGHTING
CEC-NRCC-LTO-01-E (Revised 04/16) CALIFORNIA ENERGY COMMISSION

CERTIFICATE OF COMPLIANCE	NRCC-LTO-01-E
Outdoor Lighting	(Page 1 of 4)
Project Name: 120'x40' (PC 04-116504)	Date Prepared: 03/05/2018

A. General Information

Project Address: NA	Total Illuminated Hardscape Area: NA

Phase of Construction: ☑ New Construction ☐ Addition ☐ Alteration

Outdoor Lighting Zone (LZ) ☐ LZ-1 ☐ LZ-2 ☑ LZ-3 ☐ LZ-4

I have confirmed with the AHJ which LZ applies to this site. For default lighting zone designations, see Title 24 Part 6, §10-114

B. Lighting Compliance Documents (check box for each document included)

For detailed instructions on the use of this and all Energy Efficiency Standards compliance documents, refer to the Nonresidential Manual published by the California Energy Commission.

☑	NRCC-LTO-01-E	Certificate of Compliance
☑	NRCC-LTO-02-E	Outdoor Lighting Controls Certificate of Compliance
☑	NRCC-LTO-03-E	Outdoor Lighting Power Allowance Certificate of Compliance
☐	NRCC-LTO-04-E	Outdoor Lighting Existing Conditions Certificate of Compliance

C. Summary of Allowed Outdoor Lighting Power

		Watts
01	**Sum Total ALLOWED** Outdoor Lighting Wattage from NRCC-LTO-03-E, page 1 Alterations with NO increase of connected lighting load may instead use the allowed wattage from NRCC-LTO-04, page 2.	120
Complies ONLY if **Installed** (Box 02) ≤ **Allowed** (Box 01)		
02	**Sum Total INSTALLED** Outdoor Lighting Wattage from NRCC-LTO-01-E, page 3.	120

D. Declaration of Required Installation Certificates

Declare by checking all Installation Certificates that will be submitted. (Retain copies and verify compliance documents are completed and signed.)

☑ NRCI-LTO-01-E - Must be submitted for all buildings	☐ Field Inspector
☑ NRCI-LTO-02-E - Must be submitted for a lighting control system, or for an Energy Management Control System (EMCS), to be recognized for compliance.	☐ Field Inspector

E. Declaration of Required Certificates of Acceptance

Declare by checking all of the Certificates of Acceptance that will be submitted. (Retain copies and verify compliance documents are completed and signed.)

☑ NRCA-LTO-02-A - Must be submitted for outdoor lighting controls.	☐ Field Inspector

F. Schedule of Luminaires Exempt from the Outdoor Lighting Power Requirements in §140.7

01	02
Name or Symbol	Description of exempt luminaire in accordance with the exemptions

STATE OF CALIFORNIA
OUTDOOR LIGHTING
CEC-NRCC-LTO-01-E (Revised 04/16) CALIFORNIA ENERGY COMMISSION

CERTIFICATE OF COMPLIANCE	NRCC-LTO-01-E
Outdoor Lighting	(Page 2 of 4)
Project Name: 120'x40' (PC 04-116504)	Date Prepared: 03/05/2018

G. Schedule of Luminaires Exempt from the Cutoff Requirements in §130.2(b)

01	02
Name or Symbol	Description of exempt luminaire in accordance with the exemptions

H. Schedule of Luminaires Exempt from the Outdoor Lighting Control Requirements in §130.2(c)

01	02
Name or Symbol	Description of exempt luminaire in accordance with the exemptions

STATE OF CALIFORNIA
OUTDOOR LIGHTING
CEC-NRCC-LTO-01-E (Revised 04/16) CALIFORNIA ENERGY COMMISSION

CERTIFICATE OF COMPLIANCE	NRCC-LTO-01-E
Outdoor Lighting	(Page 3 of 4)
Project Name: 120'x40' (PC 04-116504)	Date Prepared: 03/05/2018

I. Outdoor Lighting Schedule and Field Inspection Energy Checklist

Luminaire Schedule		Installed Watts					Location	Cutoff	Field Inspector	
01	02	03	04		05	06	07	08	09	
Name or Item Tag	Complete Luminaire Description	Watts per Luminaire	How wattage was determined: CEC Default from NAs	How wattage was determined: According to §130.0(c)	Number of Luminaires	Total Installed Watts in this area (03 x 05)	Primary Function area in which these luminaires are installed (Outdoor Lighting Zone)	BUG Rating	Pass	Fail
D	EXTERIOR LED LIGHT FIXTURE 30W MAX WITH PHOTOCELL MOUNT AT 93" AFF	30	☑	☐	4	120	MAIN ENTRANCE	UH: UL: FVH: BVH: FH: BH:	○	○
			☐	☐		0		UH: UL: FVH: BVH: FH: BH:	○	○
			☐	☐		0		UH: UL: FVH: BVH: FH: BH:	○	○
INSTALLED WATTS PAGE TOTAL:						120	Enter sum total of all pages (**Sum Total INSTALLED** Outdoor lighting wattage) into NRCC-LTO-01-E; Page 1		120	

STATE OF CALIFORNIA
OUTDOOR LIGHTING
CEC-NRCC-LTO-01-E (Revised 04/16) CALIFORNIA ENERGY COMMISSION

CERTIFICATE OF COMPLIANCE	NRCC-LTO-01-E
Outdoor Lighting	(Page 4 of 4)
Project Name: 120'x40' (PC 04-116504)	Date Prepared: 03/05/2018

DOCUMENTATION AUTHOR'S DECLARATION STATEMENT

1. I certify that this Certificate of Compliance documentation is accurate and complete.

Documentation Author Name: RALPH M. TAVARES	Documentation Author Signature:
Company: R&S TAVARES ASSOCIATES, INC.	Signature Date: 03/05/2018
Address: 11777 BERNARDO PLAZA CT. SUITE 105	CEA Certification Identification (if applicable):
City/State/Zip: SAN DIEGO, CA 92128	Phone: 858 444 3344 EXT 1801

RESPONSIBLE PERSON'S DECLARATION STATEMENT

I certify the following under penalty of perjury, under the laws of the State of California:
1. The information provided on this Certificate of Compliance is true and correct.
2. I am eligible under Division 3 of the Business and Professions Code to accept responsibility for the building design or system design identified on this Certificate of Compliance (responsible designer).
3. The energy features and performance specifications, materials, components, and manufactured devices for the building design or system design identified on this Certificate of Compliance conform to the requirements of Title 24, Part 1 and Part 6 of the California Code of Regulations.
4. The building design features or system design features identified on this Certificate of Compliance are consistent with the information provided on other applicable compliance documents, worksheets, calculations, plans and specifications submitted to the enforcement agency for approval with this building permit application.
5. I will ensure that a completed signed copy of this Certificate of Compliance shall be made available with the building permit(s) issued for the building, and made available to the enforcement agency for all applicable inspections. I understand that a completed signed copy of this Certificate of Compliance is required to be included with the documentation the builder provides to the building owner at occupancy.

Responsible Designer Name: MANNY D. FRISCH	Responsible Designer Signature:
Company : R&S TAVARES ASSOCIATES, INC.	Date Signed: 03/05/2018
Address: 11777 BERNARDO PLAZA CT. SUITE 105	License: S3380
City/State/Zip: SAN DIEGO, CA 92128	Phone: 858 444 3344 EXT 1810

APPROVED
DIVISION OF STATE ARCHITECT
HIGH PERFORMANCE SECTION
APP.# 04-116504 DATE: 7-10-18

STATE OF CALIFORNIA
OUTDOOR LIGHTING CONTROLS
CEC-NRCC-LTO-02-E (Revised 08/16) CALIFORNIA ENERGY COMMISSION

CERTIFICATE OF COMPLIANCE	NRCC-LTO-02-E
Outdoor Lighting Controls	(Page 1 of 3)
Project Name: 120'x40' (PC 04-116504)	Date Prepared: 03/05/2018

A. Mandatory Outdoor Lighting Control Declaration Statements

Check all that apply:

- ☑ Lighting shall be controlled by self-contained lighting control devices which are certified to the Energy Commission according to the Title 20 Appliance Efficiency Regulations in accordance with §110.9(a).
- ☐ Lighting shall be controlled by a lighting control system or energy management control system in accordance with §110.9. An Installation Certificate shall be submitted in accordance with §130.4(b).
- ☑ All lighting controls and equipment shall comply with the applicable requirements in §110.9 and shall be installed in accordance with the manufacturer's instructions in accordance with §130.0(d).
- ☐ Part-Night Outdoor Lighting Controls, as defined in Section 100.1(b), shall meet the requirements in Section 110.9(b)5.
- ☐ All outdoor incandescent luminaires rated over 100 watts, determined in accordance with Section 130.0(c), shall be controlled by a motion sensor.
- ☐ All outdoor luminaires rated for use with lamps greater than 150 lamp watts, determined in accordance with Section 130.0(c), shall comply with Uplight and Glare requirements in accordance with Section 130.2(b)
- ☑ All installed outdoor lighting shall be controlled by a photocontrol or outdoor astronomical time-switch control, or other control capable of automatically switching OFF in accordance with Section 130.2(c)1.
- ☐ All installed outdoor lighting shall be circuited and independently controlled from other electrical loads by an automatic scheduling control in accordance with Section 130.2(c)2.
- ☑ All installed outdoor lighting, where the bottom of the luminaire is mounted 24 feet or less above the ground, shall be controlled with automatic lighting controls in accordance with Section 130.2(c)3.
- ☐ For Outdoor Sales Frontage, an automatic lighting control shall be installed in accordance with Section 130.2(c)4.
- ☐ For Building Facade, Ornamental Hardscape and Outdoor Dining lighting, an automatic lighting control shall be installed in accordance with Section 130.2(c)5
- ☐ Before an occupancy permit is granted for the newly constructed building or for the addition, or for any altered outdoor lighting controls, shall be certified as meeting the Acceptance Requirements for Code Compliance in accordance with §130.4.(a). Outdoor lighting controls shall comply with the applicable requirements of Section 130.2(c) and Reference Nonresidential Appendix NA7.8.

STATE OF CALIFORNIA
OUTDOOR LIGHTING CONTROLS
CEC-NRCC-LTO-02-E (Revised 08/16) CALIFORNIA ENERGY COMMISSION

CERTIFICATE OF COMPLIANCE	NRCC-LTO-02-E
Outdoor Lighting Controls	(Page 2 of 3)
Project Name: 120'x40' (PC 04-116504)	Date Prepared: 03/05/2018

B. Mandatory Outdoor Lighting Control Schedule and Field Inspection Checklist

Outdoor Lighting Control Schedule			Standards Complying With (✓ all that apply, or leave empty if Exempted)						✓ if Acceptance Test Required	Field Inspector	
01	02	03	04	05	06	07	08	09	10	11	
Location and Application of Luminaires Being Controlled	Type/ Description of Lighting Control (i.e. outdoor motion sensor, outdoor photocontrol, outdoor astronomical time-switch control, automatic scheduling control, part-night outdoor lighting control)	# of Units	§130.2(a)	§130.2(c)1	§130.2(c)2	§130.2(c)3	§130.2(c)4	§130.2(c)5		Pass	Fail
ENTRY DOOR	PHOTOCELL CONTROLLED	4		◆		◆			☐	○	○
									☐	○	○
									☐	○	○
									☐	○	○
									☐	○	○
									☐	○	○
									☐	○	○
									☐	○	○
									☐	○	○
									☐	○	○
									☐	○	○
									☐	○	○
									☐	○	○
									☐	○	○
									☐	○	○
									☐	○	○
									☐	○	○

STATE OF CALIFORNIA
OUTDOOR LIGHTING CONTROLS
CEC-NRCC-LTO-02-E (Revised 08/16) CALIFORNIA ENERGY COMMISSION

CERTIFICATE OF COMPLIANCE	NRCC-LTO-02-E
Outdoor Lighting Controls	(Page 3 of 3)
Project Name: 120'x40' (PC 04-116504)	Date Prepared: 03/05/2018

DOCUMENTATION AUTHOR'S DECLARATION STATEMENT

1. I certify that this Certificate of Compliance documentation is accurate and complete.

Documentation Author Name: RALPH M. TAVARES	Documentation Author Signature:
Company: R&S TAVARES ASSOCIATES, INC.	Signature Date: 03/05/2018
Address: 11777 BERNARDO PLAZA CT. SUITE 105	CEA Certification Identification (if applicable):
City/State/Zip: SAN DIEGO, CA 92128	Phone: 858 444 3344 EXT 1801

RESPONSIBLE PERSON'S DECLARATION STATEMENT

I certify the following under penalty of perjury, under the laws of the State of California:
1. The information provided on this Certificate of Compliance is true and correct.
2. I am eligible under Division 3 of the Business and Professions Code to accept responsibility for the building design or system design identified on this Certificate of Compliance (responsible designer).
3. The energy features and performance specifications, materials, components, and manufactured devices for the building design or system design identified on this Certificate of Compliance conform to the requirements of Title 24, Part 1 and Part 6 of the California Code of Regulations.
4. The building design features or system design features identified on this Certificate of Compliance are consistent with the information provided on other applicable compliance documents, worksheets, calculations, plans and specifications submitted to the enforcement agency for approval with this building permit application.
5. I will ensure that a completed signed copy of this Certificate of Compliance shall be made available with the building permit(s) issued for the building, and made available to the enforcement agency for all applicable inspections. I understand that a completed signed copy of this Certificate of Compliance is required to be included with the documentation the builder provides to the building owner at occupancy.

Responsible Designer Name: MANNY D. FRISCH	Responsible Designer Signature:
Company : R&S TAVARES ASSOCIATES, INC.	Date Signed: 03/05/2018
Address: 11777 BERNARDO PLAZA CT. SUITE 105	License: S3380
City/State/Zip: SAN DIEGO, CA 92128	Phone: 858 444 3344 EXT 1810

IDENTIFICATION STAMP
DIV. OF THE STATE ARCHITECT
APP: 01-119031 INC:
REVIEWED FOR
SS ☑ FLS ☑ ACS ☑
DATE: 10/22/2020

PROFESSIONAL STAMP

REGISTERED PROFESSIONAL ENGINEER MANNY D. FRISCH C-23804 STRUCTURAL STATE OF CALIFORNIA

12/19/2017

THE PLANS, IDEAS & DESIGNS SHOWN ON THESE DRAWINGS ARE THE PROPERTY OF R&S TAVARES ASSOCIATES, INC. DEVISED SOLELY FOR THIS CONTRACT. THESE PLANS SHALL NOT BE USED, IN WHOLE OR IN PART, FOR ANY PURPOSE FOR WHICH THEY WERE NOT INTENDED WITHOUT THE EXPRESS WRITTEN CONSENT OF R&S TAVARES ASSOCIATES, INC. ©

CLIENT
CLASS LEASING LLC
1221 Harley Knox Boulevard
Perris, CA 92571

ORIGINAL PC STATE AGENCY APPROVAL
FILE NUMBER: PC-128
IDENTIFICATION STAMP
DIVISION OF THE STATE ARCHITECT
04 - 116504 INCR: 0
AC RM FLS EA SSR KER
DATE 07/19/2018

PROJECT TITLE
24' x 40'
EXPANDABLE TO
120' x 40'

PRE-CHECK (PC) DOCUMENT
Code: [2016] **CBC**
A separate project application for construction is required.

PROJECT SPECIFIC STATE AGENCY APPROVAL

Revision Schedule

#	Description	Date

SHEET TITLE
120'x40' T24 CZ 16
(WALL AC)

PROJECT NUMBER
17016A

DRAWN BY
rMc/SC

CHECKED BY
JA/RT

DATE
2018/03/08

SHEET NO.
E2.2

SHEET OF SHEETS

3/8/2018 2:19:40 PM C:\Users\Andrew\Documents\17016 - Aries, 24x40 PC - MainFile - Low Seismic_Andrew.rvt

General Information

Project Address:	Climate Zone:	Conditioned Floor Area : 4800
NA	16	Unconditioned Floor Area :

Building Type: ☐ Nonresidential ☐ High-Rise Residential ☐ Hotel/Motel
☐ Schools ☑ Relocatable Public Schools ☐ Conditioned Spaces ☐ Unconditioned Spaces
Phase of Construction: ☐ New Construction ☐ Addition ☐ Alteration

In the table below identify all applicable construction documents that specify the requirements for the scope of responsibility reported by this certificate. Use additional pages as needed to list all construction documents related to compliance of Section 130.5.

Document Number	Document Title/Descriptions (include description information for Table or Schedule if it contains compliance information)	Document Sheet # or Page #	Indicate which subsection of Section 130.5 is related to the document (e.g. 130.5(a) for service electrical metering)

Add Row Remove Last

A. Service Electrical Metering

Check one of the three boxes below if the electrical power distribution system is in compliance with Section 130.5(a).

☐ For newly installed electrical service in newly constructed buildings, Service Electrical Metering is required according to Section 130.5(a). *Fill out Column 1 through 6 of table below.*

☑ For new or replacement electrical service equipment in existing buildings, Service Electrical Metering is required according to Section 141.0(b)2Pi. *Fill out Column 1 through 6 of table below.*

☐ EXCEPTION to Electrical Service Metering: Service or feeder for which the utility company provides a metering system that indicates instantaneous kW demand and kWh for a utility-defined period. *Fill out Column 1, 2 and 6 of table below with the compliance information.*

Fill out a separate line for each electrical service that is connected to the building.

Electrical Service Schedule	Electrical	Metering Capabilities (check all that are present)				Exception to	Field Inspector
01	02	03	04	05	06	07	08
Electrical Service Designation/ Location/Description	kVA	Instantaneous (at the time) kW	Historical peak (kW)	Tracking kWh for a user-definable period	kWh per rate period	Utility metering system	Check that the metering complies
IT WILL VARY DEPENDING ON CLIENT'S SITE PROJECT - RELOCATABLE PUBLIC SCHOOL	0	☐	☐	☐	☐	☐	☐

Add Row Remove Last

STATE OF CALIFORNIA
Electrical Power Distribution
CEC-NRCC-ELC-01-E (Revised 01/16) CALIFORNIA ENERGY COMMISSION
CERTIFICATE OF COMPLIANCE NRCC-ELC-01-E
Electrical Power Distribution Page of
Project Name: 120'x40' (PC 04-116504) Date Prepared: 04/24/2018

B. Separation of Electrical Circuits for Electrical Energy Monitoring

Check all boxes below if the electrical power distribution system is in compliance with Section 130.5(b).

☑ The electrical power distribution system meets the separation of electrical circuits for electrical energy monitoring requirement of Section 130.5(b). The electrical power distribution systems is designed so that measurement devices can monitor the electrical energy usage of load types according to TABLE 130.5-B.

☐ Describe the electrical power distribution system installed and the compliance method chosen in meeting the requirement of Section 130.5(b). Use the space below to include the information. Examples of compliance methods are detailed in Nonresidential Compliance Manual Chapter 8.

Fill out Column 1 thru 3 with the compliance information.

General Information	Electrical Power Distribution System information and Method of compliance	Electrical Service Rating	Enforcement Agency
01	02	03	04
Electrical Service Designation/Location/Description	Describe the electrical power distribution system installed and the compliance method used	kVA	Check that the system complies
IT WILL VARY DEPENDING ON CLIENT'S SITE PROJECT - RELOCATABLE PUBLIC SCHOOL	NA	0	☐

Field Inspector Notes:

CA Building Energy Efficiency Standards - 2016 Nonresidential Compliance January 2016

STATE OF CALIFORNIA
Electrical Power Distribution
CEC-NRCC-ELC-01-E (Revised 01/16) CALIFORNIA ENERGY COMMISSION
CERTIFICATE OF COMPLIANCE NRCC-ELC-01-E
Electrical Power Distribution Page of
Project Name: 120'x40' (PC 04-116504) Date Prepared: 04/24/2018

C. Voltage Drop

Check all boxes below if he electrical power distribution system is in compliance with Section 130.5(c).

	Enforcement Agency Check that the system complies
☑ The electrical power distribution system meets the voltage drop requirement of Section 130.5(c). The maximum combined voltage drop on feeder conductors and branch circuit conductors to the farthest connected load or outlet, do not exceed 5%.	☐
☐ Voltage drop calculation documents showing compliance to Section 130.5(c) are submitted as part of the compliance document submittal.	☐

D. Circuit Controls for 120-Volt Receptacles and Controlled Receptacles

Check one or more boxes below for applicable requirements of Section 130.5(d) for the electrical power distribution system.

	Field Inspector Check that the system complies
☐ The control is capable of automatically shutting OFF the controlled receptacles when the space is typically unoccupied, either at the receptacle or circuit level. For the automatic time switch control, it incorporates an override control that allows the controlled receptacle to remain ON for no more than 2 hours when an override is initiated and an automatic holiday "shut-OFF" feature that turns OFF all loads for at least 24 hours and then resumes the normally scheduled operation. Countdown timer switches are not be used to comply with the automatic time switch control requirements. The controls meet the requirement of Section 130.5(d)1.	☐
☑ There is at least one controlled receptacle within 6 ft from each uncontrolled receptacle. Where receptacles are installed in modular furniture in open office area, at least one controlled receptacle is installed at each workstation. The receptacles meet the requirement of Section 130.5(d)2.	☐
☐ There are installed split wired receptacles with at least one controlled and one uncontrolled receptacle. Where receptacles are installed in modular furniture in open office area, at least one controlled receptacle is installed at each workstation. The receptacles meet the requirement of Section 130.5(d)2.	☐
☑ Permanent and durable marking for controlled receptacles or circuits to differentiate them from uncontrolled receptacles or circuits is provided. The markings meet the requirement of Section 130.5(d)3.	☐
☐ For hotel and motel guest rooms, there are controlled receptacles for at least one-half of the 120-volt receptacles in each guest room. Electric circuits serving controlled receptacles in guestrooms are installed to have captive key controls, occupancy sensing controls, or automatic controls so the power is switched off no longer than 30 minutes after the guest room has been vacated. The receptacles meet the requirement of Section 130.5(d)4.	☐
☑ Receptacles that are only for the following purposes are excepted from Section 130.5(d): - Receptacles specifically for refrigerators and water dispensers in kitchen areas. - Receptacles located a minimum of six ft above the floor that are specifically for clocks. - Receptacles for network copiers, fax machines, A/V and data equipment other than personal computers in copy rooms. - Receptacles on circuits rated more than 20 amperes. - Receptacles connected to an uninterruptible power supply (UPS) that are intended to be in continuous use, 24 hours per day/365 days per year, and are marked to differentiate them from other uncontrolled receptacles or circuits.	☐

CA Building Energy Efficiency Standards - 2016 Nonresidential Compliance January 2016

STATE OF CALIFORNIA
Electrical Power Distribution
CEC-NRCC-ELC-01-E (Revised 01/16) CALIFORNIA ENERGY COMMISSION
CERTIFICATE OF COMPLIANCE NRCC-ELC-01-E
Electrical Power Distribution Page of
Project Name: 120'x40' (PC 04-116504) Date Prepared: 04/24/2018

DOCUMENTATION AUTHOR'S DECLARATION STATEMENT

1. I certify that this Certificate of Compliance documentation is accurate and complete.

Documentation Author Name: RALPH M. TAVARES	Documentation Author Signature:
Company: R&S TAVARES ASSOCIATES, INC.	Signature Date: 04/24/2018
Address: 11777 BERNARDO PLAZA CT. SUITE 105	CEA/ HERS Certification Identification (if applicable):
City/State/Zip: SAN DIEGO, CA 92128	Phone: 858-444-3344 EXT 1801

RESPONSIBLE PERSON'S DECLARATION STATEMENT

I certify the following under penalty of perjury, under the laws of the State of California:

1. The information provided on this Certificate of Compliance is true and correct.
2. I am eligible under Division 3 of the Business and Professions Code to accept responsibility for the building design or system design identified on this Certificate of Compliance (responsible designer).
3. The energy features and performance specifications, materials, components, and manufactured devices for the building design or system design identified on this Certificate of Compliance conform to the requirements of Title 24, Part 1 and Part 6 of the California Code of Regulations.
4. The building design features or system design features identified on this Certificate of Compliance are consistent with the information provided on other applicable compliance documents, worksheets, calculations, plans and specifications submitted to the enforcement agency for approval with this building permit application.
5. I will ensure that a completed signed copy of this Certificate of Compliance shall be made available with the building permit(s) issued for the building, and made available to the enforcement agency for all applicable inspections. I understand that a completed signed copy of this Certificate of Compliance is required to be included with the documentation the builder provides to the building owner at occupancy.

Responsible Designer Name: MANNY D. FRISCH	Responsible Designer Signature:
Company: R&S TAVARES ASSOCIATES, INC.	Date Signed: 04/24/2018
Address: 11777 BERNARDO PLAZA CT. SUITE 105	License: S3380
City/State/Zip: SAN DIEGO, CA 91218	Phone: 858 444 3344 EXT 1810

CA Building Energy Efficiency Standards - 2016 Nonresidential Compliance January 2016

APPROVED
DIVISION OF STATE ARCHITECT
HIGH PERFORMANCE SECTION
APP.# 04-116504 DATE 7-10-18

IDENTIFICATION STAMP
DIV. OF THE STATE ARCHITECT
APP: 01-119031 INC:
REVIEWED FOR
SS ☑ FLS ☑ ACS ☑
DATE: 10/22/2020

PROFESSIONAL STAMP
REGISTERED PROFESSIONAL ENGINEER MANNY D. FRISCH S-2380 STRUCTURAL STATE OF CALIFORNIA
12/19/2017

THE PLANS, IDEAS & DESIGNS SHOWN ON THESE DRAWINGS ARE THE PROPERTY OF R&S TAVARES ASSOCIATES, INC. DEVISED SOLELY FOR THIS CONTRACT. THESE PLANS SHALL NOT BE USED, IN WHOLE OR IN PART, FOR ANY PURPOSE FOR WHICH THEY WERE NOT INTENDED WITHOUT THE EXPRESS WRITTEN CONSENT OF R&S TAVARES ASSOCIATES, INC. ©

CLIENT
CLASS LEASING LLC
1221 Harley Knox Boulevard
Perris, CA 92571

ORIGINAL PC STATE AGENCY APPROVAL
FILE NUMBER: PC-128
IDENTIFICATION STAMP
DIVISION OF THE STATE ARCHITECT
04 - 116504 INCR: 0
AC RM FLS EA SSR KER
DATE 07/19/2018

PROJECT TITLE
24' x 40'
EXPANDABLE TO
120' x 40'

PRE-CHECK (PC) DOCUMENT
Code: [2016] **CBC**
A separate project application for construction is required.

PROJECT SPECIFIC STATE AGENCY APPROVAL

Revision Schedule

#	Description	Date

SHEET TITLE
120'x40' T24 CZ 16
(WALL AC)

PROJECT NUMBER
17016A

DRAWN BY
rMc/SC

CHECKED BY
JA/RT

DATE
2018/04/25

SHEET NO.
E2.3

SHEET OF SHEETS

3/8/2018 2:19:40 PM C:\Users\Andrew\Documents\17016 - Aries, 24x40 PC - MainFile - Low Seismic_Andrew.rvt

ABB.	DESCRIPTION	SYMBOL
WM	WALL MOUNTED UNIT (SEE SCHEDULE THIS SHEET)	WM-1
RM	ROOF MOUNTED UNIT (SEE SCHEDULE THIS SHEET)	RM-1
P.O.C	POINT OF CONNECTION	P.O.C
CO2	CARBON MONOXIDE SENSOR	CO2
BT	BYPASS TIMER	BT
STAT	THERMOSTAT	T
UC	UNDERCUT DOOR	UC
MVD	MANUAL VOLUME DAMPER	
FD	FIRE DAMPER	
VTR	VENT THRU ROOF	
ER	EXHAUST CEILING REGISTER	
CR	RETURN CEILING REGISTER	
CD	SUPPLY CEILING DIFFUSER	
(L)	LINED DUCTWORK	
EAD	EXHAUST AIR DUCT	
RAD	RETURN AIR DUCT	
SAD	SUPPLY AIR DUCT	
EF	EXHAUST FAN	EF -

1 1" = 1'-0" *LEGEND*

EQUIPMENT ANCHORAGE

ALL MECHANICAL, PLUMBING AND ELECTRICAL COMPONENTS SHALL BE ANCHORED AND INSTALLED PER THE DETAILS ON THE DSA APPROVED CONSTRUCTION DOCUMENTS. WHERE NO DETAIL IS INDICATED, THE FOLLOWING COMPONENTS SHALL BE ANCHORED OR BRACED TO MEET THE FORCE AND DISPLACEMENT REQUIREMENTS PRESCRIBED IN THE 2016 CBC, SECTIONS 1616A.1.18 THROUGH 1616A.1.26 AND ASCE 7-10 CHAPTER 13, 26 AND 30.

1. ALL PERMANENT EQUIPMENT AND COMPONENTS.
2. TEMPORARY OR MOVABLE EQUIPMENT THAT IS PERMANENTLY ATTACHED (E.G. HARD WIRED) TO THE BUILDING UTILITY SERVICES SUCH AS ELECTRICITY, GAS OR WATER.
3. MOVABLE EQUIPMENT WHICH IS STATIONED IN ONE PLACE FOR MORE THAN 8 HOURS AND HEAVIER THAN 400 POUNDS ARE REQUIRED TO BE ANCHORED WITH TEMPORARY ATTACHMENTS.

THE ATTACHMENT OF THE FOLLOWING MECHANICAL AND ELECTRICAL COMPONENTS SHALL BE POSITIVELY ATTACHED TO THE STRUCTURE, BUT NEED NOT BE DETAILED ON THE PLANS. THESE COMPONENTS SHALL HAVE FLEXIBLE CONNECTIONS PROVIDED BETWEEN THE COMPONENT AND ASSOCIATED DUCTWORK, PIPING, AND CONDUIT.

A. COMPONENTS WEIGHING LESS THAN 400 POUNDS AND HAVE A CENTER OF MASS LOCATED 4 FEET OR LESS ABOVE THE ADJACENT FLOOR OR ROOF LEVEL THAT DIRECTLY SUPPORT THE COMPONENT.
B. COMPONENTS WEIGHING LESS THAN 20 POUNDS, OR IN THE CASE OF DISTRIBUTED SYSTEMS, LESS THAN 5 POUNDS PER FOOT, WHICH ARE SUSPENDED FROM A ROOF OR FLOOR OR HUNG FROM A WALL.

FOR THOSE ELEMENTS THAT DO NOT REQUIRE DETAILS ON THE APPROVED DRAWINGS, THE INSTALLATION SHALL BE SUBJECT TO THE APPROVAL OF THE STRUCTURAL ENGINEER OF RECORD AND THE DSA DISTRICT STRUCTURAL ENGINEER. THE PROJECT INSPECTOR WILL VERIFY THAT ALL COMPONENTS AND EQUIPMENT HAVE BEEN ANCHORED IN ACCORDANCE WITH ABOVE REQUIREMENTS.

BRACING OF PIPING, DUCTWORK AND ELECTRICAL SYSTEM:

PIPING, DUCTWORK AND ELECTRICAL DISTRIBUTION SYSTEMS SHALL BE BRACED TO COMPLY WITH THE FORCES AND DISPLACEMENTS PRESCRIBED IN ASCE 7-10 SECTION 13.3 AS DEFINED IN ASCE 7-10 SECTION 13.6.8, 13.6.7, 13.6.5.6 AND 2016 CBC SECTIONS 1616A.1.23, 1616A.1.24, 1616A.1.25 AND 1616A.1.26

THE BRACING AND ATTACHMENTS TO THE STRUCTURE SHALL BE DETAILED ON THE APPROVED DRAWINGS OR THEY SHALL COMPLY WITH ONE OF THE OSHPD PRE-APPROVALS (OPA #) AS MODIFIED TO SATISFY ANCHORAGE REQUIREMENTS OF ACI 318, APPENDIX D.

COPIES OF THE MANUAL SHALL BE AVAILABLE ON THE JOBSITE PRIOR TO THE START OF HANGING AN BRACING OF THE PIPE, DUCTWORK AND ELECTRICAL DISTRIBUTION SYSTEMS.

THE STRUCTURAL ENGINEER OF RECORD SHALL VERIFY THE ADEQUACY OF THE STRUCTURE TO SUPPORT THE HANGER AND BRACE LOADS.

5 1" = 1'-0" *EQUIPMENT ANCHORAGE*

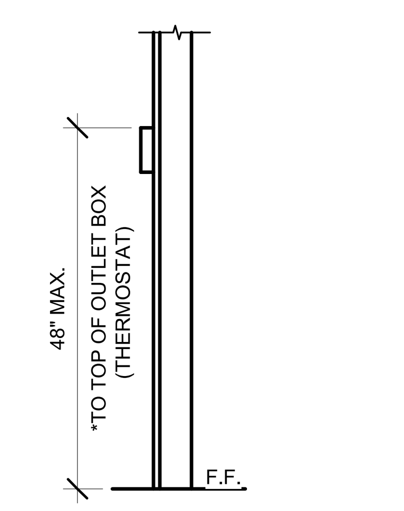

* 30"x48" MIN CLR FLOOR SPACE AT EACH LOCATION FOR PERPENDICULAR APPROACH

9 1" = 1'-0" *MOUNTING ELEV.*

CEILING MOUNTED EXHAUST FAN

SYM.	USE	MFR/MODEL	CFM	SOUND LEVEL	SP	VOLTS	Ø	POWER	WGT#	NOTES
EF A	BATHROOM EXHAUST	BROAN L100	109	1.0 SONES	0.25	120	1	87 WATTS	22.80#	WITH BROAN ROOF CAP #634. PROVIDE 6" DIA. EXHAUST DUCT UP TO ROOF. INTERLOCK WITH LIGHT SWITCH
EF B	BATHROOM EXHAUST	BROAN L200	210	2.0 SONES	0.25	120	1	127 WATTS	23#	WITH BROAN ROOF CAP #634. PROVIDE 8" DIA. EXHAUST DUCT UP TO ROOF. INTERLOCK WITH LIGHT SWITCH.
EF C	BATHROOM EXHAUST	BROAN L300	308	2.8 SONES	0.25	120	1	212 WATTS	23.1O#	WITH BROAN ROOF CAP #634. PROVIDE 8" DIA. EXHAUST DUCT UP TO ROOF. INTERLOCK WITH LIGHT SWITCH.
EF D	BATHROOM EXHAUST	BROAN 676	100	4.0 SONES	0.25	120	1	156 WATTS	7#	WITH BROAN ROOF CAP #636. PROVIDE 4" DIA. EXHAUST DUCT UP TO ROOF. INTERLOCK WITH LIGHT SWITCH.

OR APPROVED EQUAL.

2 1" = 1'-0" *CEILING MOUNTED EXHAUST FAN SCHEDULE*

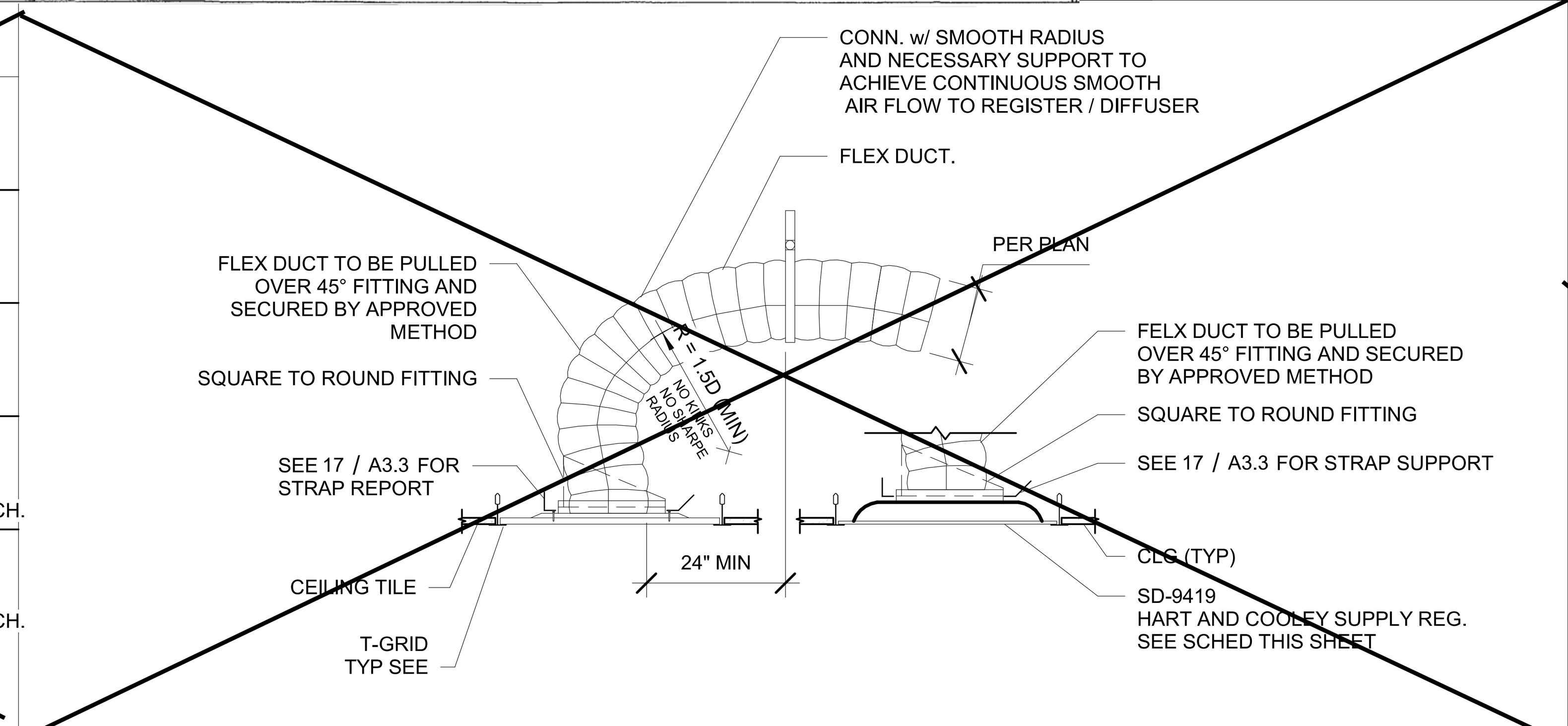

PERFORATED FACE GRILLE SCHEDULE (SUPPLY)

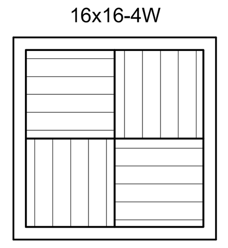

T-BAR SUPPLY

Fixed Curve Blade, 4-way throw

NECK SIZE	CFM (RANGE)	NOTES
6"Ø	0-150	SEE DETAIL FOR MAKE AND MODEL
8"Ø	150-230	SEE DETAIL FOR MAKE AND MODEL
10"Ø	230-350	SEE DETAIL FOR MAKE AND MODEL
12"Ø	350-460	SEE DETAIL FOR MAKE AND MODEL
14"Ø	460-640	SEE DETAIL FOR MAKE AND MODEL

3 1" = 1'-0" *PFG SCHED (SUPPLY)*

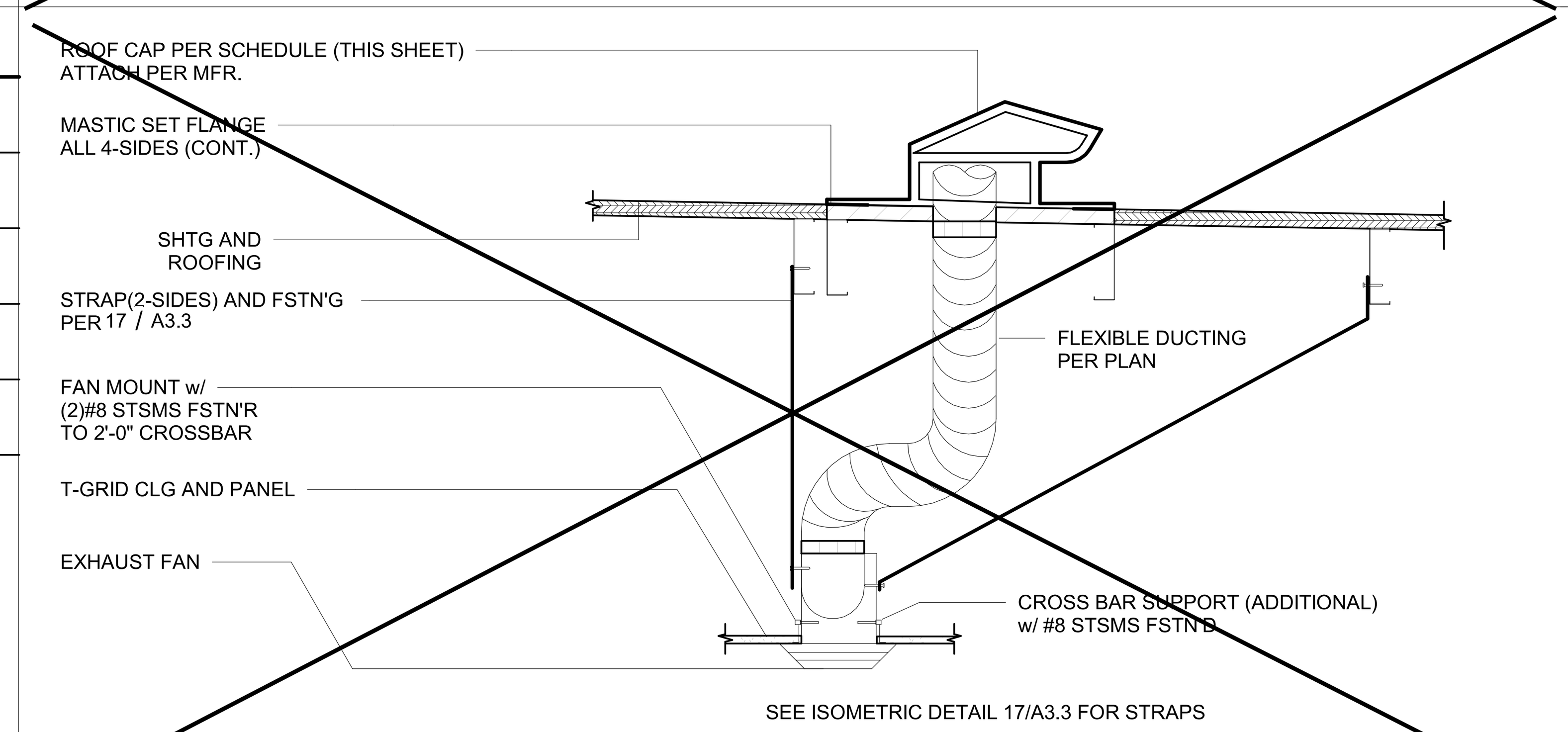

PERFORATED FACE GRILLE SCHEDULE (RETURN)

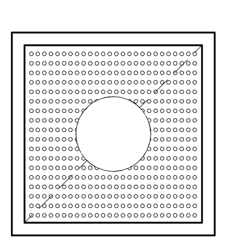

T-BAR RETURN

Perforated Face

Shoemaker 105P with 24 ga. 45 deg.

NECK SIZE	CFM (RANGE)	NOTES
6"Ø	0-230	SEE MECH CLG PLAN FOR SIZE
10"Ø	230-460	SEE MECH CLG PLAN FOR SIZE
14"Ø	460-710	SEE MECH CLG PLAN FOR SIZE

4 1" = 1'-0" *PFG SCHED (RETURN)*

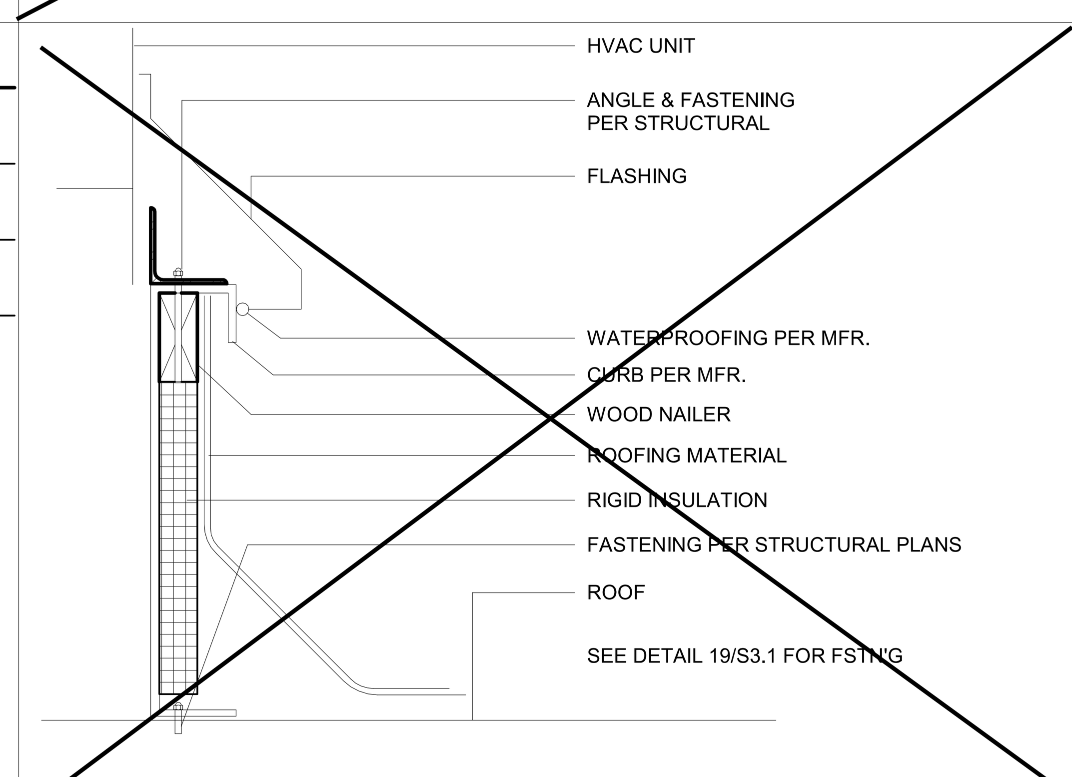

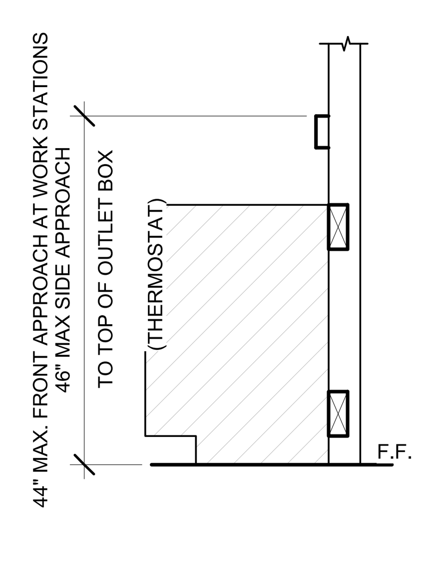

10 1" = 1'-0" *ELEV. @ WORKSTATION*

10.6 EER and 11 EER

SINGLE PACKAGE VERTICAL HEAT PUMP SCHEDULE

	STANDARD	OPTION #I	OPTION #2
TAG	WM-1.1	WM-1.2	WM-1.3
NOMINAL TONNAGE	4.0 TONS	*5 TONS	3.5 TONS
MANUFACTURER	**BARD	**BARD	**BARD
MODEL#	C48H1	C60H1	C42H1
CFM	1550	1700	1400
STATIC PRESSURE	3.0	3.0	3.0
DRIVE	DIRECT	DIRECT	DIRECT
MCA	58	67	57
MOCP	60	80	60
VOLTAGE	208/230-1	208/230-1	208/230-1
WIRE SIZE (PWR/GRND)	#6/#10	#4/#8	#6/#10
DESIGN RETURN AIR (DB/WB)	80/67	80/67	80/67
SENSIBLE COOLING @ 95º F (PART/FULL)	25.900/36.00	30.800/40.300	21.700/29.700
TOTAL COOLING @ 95º F (PART/FULL)	34.000/45.500	40.800/55.500	26.800/40.000
HEATING CAP. BTUH @ 47º F (PART/FULL)	29.200/41.500	36.000/51.000	46.600/38.500
HEATING CAP. BTUH @ 17º F	26.000	32.000	25.000
OPERATING WEIGHT	550#	580#	550#
EER	11.00	10.60	11.00
COP @ 47º F	3.00	3.00	3.00
COP @ 17º F	2.00	2.00	2.00

10.6 AND 11.0 EER (GAS ALTERNATE)

SINGLE PACKAGE VERTICAL AIR CONDITIONER WITH GAS FURNACE

	STANDARD	OPTION #I	OPTION #2
TAG	WM-2.1	WM-2.2	WM-2.3
NOMINAL TONNAGE	4.0 TONS	*5 TONS	3.5 TONS
MANUFACTURER	BARD	**BARD	BARD
MODEL#	C48H1	C60H1	C42H1
CFM	1600	1750	1300
STATIC PRESSURE	0.2	0.2	0.2
DRIVE	DIRECT	DIRECT	DIRECT
MCA	38	40	32
MOCP	50	60	50
VOLTAGE	208/230-1	208/230-1	208/230-1
WIRE SIZE (PWR/GRND)	#6/#10	#6/#10	#6/#10
DESIGN RETURN AIR (DB/WB)	80/67	80/67	80/67
SENSIBLE COOLING @ 95º F (PART/FULL)	35.900/36.000	30.800/40.300	21.700/29.700
TOTAL COOLING @ 95º F (PART/FULL)	34.000/45.500	40.800/55.500	26.800/40.000
HEATING INPUT	75.000	75.000	75.000
HEATING OUTPUT	61.500	61.500	61.500
OPERATING WEIGHT	710#	725#	700#
EER	11.00	10.60	11.00
THERMAL EFFICIENCY (TE)	82	82	82

14 SEER

SINGLE PACKAGE ROOF TOP HEAT PUMP SCHEDULE

	STANDARD	OPTION #I	OPTION #2
TAG	RM-1.1	RM-1.2	RM-1.3
NOMINAL TONNAGE	4.0 TONS	*5 TONS	3 TONS
MANUFACTURER	**CARRIER	**CARRIER	**CARRIER
MODEL#	50KCQ05	50KCQ06	50KCQ04
CFM	1600	1750	1400
STATIC PRESSURE	0.2	0.2	0.15
DRIVE	BELT	BELT	BELT
MCA	64	72	59
MOCP	70	80	60
VOLTAGE	208/230-1	208/230-1	208/230-1
WIRE SIZE (PWR/GRND)	#4/#8	#4/#8	#6/#10
DESIGN RETURN AIR (DB/WB)	80/67	80/67	80/67
SENSIBLE COOLING @ 95º F	35.260	40.700	30.500
TOTAL COOLING @ 95º F	49.000	58.000	35.600
HEATING CAP. BTUH @ 47º F	45.500	58.000	35.500
HEATING CAP. BTUH @ 17º F	28.600	28.600	18.400
OPERATING WEIGHT	560#	615#	572#
SEER	14.00	14.3	14.00
HSPF	8.0	8.0	8.0
COP @ 47º F	3.4	3.5	3.4
COP @ 17º F	2.4	2.4	2.3

14 SEER (GAS ALTERNATE)

SINGLE PACKAGE ROOF TOP AIR CONDITIONER WITH GAS FURNACE

	STANDARD	OPTION #I	OPTION #2
TAG	RM-2.1	RM-2.2	RM-2.3
NOMINAL TONNAGE	4.0 TONS	*5 TONS	3 TONS
MANUFACTURER	**CARRIER	**CARRIER	**CARRIER
MODEL#	50KCQ05	50KCQ06	50KCQ04
CFM	1600	1750	1400
STATIC PRESSURE	0.2	0.2	0.15
DRIVE	BELT	BELT	BELT
MCA	36.1	41.8	29.6
MOCP	50	60	40
VOLTAGE	208/230-1	208/230-1	208/230-1
WIRE SIZE (PWR/GRND)	#6/#10	#6/#10	#6/#10
DESIGN RETURN AIR (DB/WB)	80/67	80/67	80/67
SENSIBLE COOLING @ 95º F	35.260	40.700	30.500
TOTAL COOLING @ 95º F	49.000	58.000	45.600
HEATING INPUT	90.000	90.000	90.000
HEATING OUTPUT	73.000	73.000	73.000
OPERATING WEIGHT	590#	618#	572#
SEER	14.00	14.3	14.00
AFUE	80.4%	80.4%	80.4%

HVAC NOTES
1. SET BACK THERMOSTAT SHALL BE PROVIDED
2. THE CO2 SENSOR SHALL NOT BE OBSTRUCTED BY FURNITURE OR EQUIPMENT AND NEED TO BE LOCATED ACCORDINGLY, AND PLACED NO LESS THAN 35" AFF AND NO MORE THAN 72" AFF.
3. AIR HANDLERS WITH OTHER VOLTAGES SHOULD BE ACCEPTABLE, AS WELL AS OTHERS THAN THE MAKE AND MODELS LISTED ON THESE TABLES, WHEN THE NOMINAL TONNAGE DOES NOT EXCEEDS 5 TON AND THE SEER, HSPF AND COP VALUES ARE NO LESS THAN SHOWN.
4. MODEL NUMBERS FOR HEAT PUMP UNITS WITH OPTIONAL 5.0 AUXILIARY HEAT STRIPS, WHEN THE HEAT STRIP IS NOT USED, THE MCA AND MOCP MUST BE VERIFIED AND HEAT STRIPS LARGER THAN THE SIZES SHOWN MAY NOT BE USED.
5. HVAC SYSTEM DOES NOT CONTAIN AN ECONOMIZER AND DEMAND CONTROL VENTILATION DEVICES.
6. CLASSROOMS ARE DESIGNED FOR MINIMUM OUTSIDE AIR OF 0.38 CFM PER SF. PER CALIFORNIA ENERGY CODE (CEC), SPACES SHALL BE DESIGNED TO THE MINIMUM REQUIREMENTS AS SPECIFIED OR TO 15 CFM PER OCCUPANT, WHICHEVER IS GREATER. PC MANUFACTURER SHALL VERIFY WITH THE SCHOOL DISTRICT THE EXPECTED NUMBER OF OCCUPANTS IN THE CLASSROOM SO THAT THE OUTDOOR VENTILATION RATE FOR MECHANICAL SYSTEMS CAN BE ADEQUATELY ADJUSTED UPON SITE INSTALLATION OF THE BUILDING. PC MANUFACTURER SHALL ALSO CONFIRM WITH HVAC EQUIPMENT MANUFACTURER THAT THE SELECTED EQUIPMENT WILL BE ABLE TO PERFORM TO ACCOMODATE THE ADDITIONAL OUTDOOR AIR REQUIREMENTS UNDER THE PEAK DESIGN CONDITIONS FOR THE CLIMATE ZONE IN WHICH THE BUILDING IS LOCATED. AT OCCUPANCY, THE BUILDING MANUFACTURER SHALL PROVIDE TO BUILDING OWNER A DESCRIPTION OF THE QUANTITIES OF OUTDOOR AND RECIRCULATED AIR THAT THE VENTILATION SYSTEMS ARE DESIGNED TO PROVIDE EACH AREA.

*FOR 24x40 BUILDING A 5 TONS UNIT IS ONLY TO BE USED ON COMPUTER LAB APPLICATION

**OR EQUAL

SECTION 915
CARBON MONOXIDE DETECTION

915.2.3 Group E occupancies. Carbon monoxide detection shall be installed in classrooms in Group E occupancies. Carbon monoxide alarm signals shall be automatically transmitted to an on-site location that is staffed byschool personnel.

915.3 Detection equipment. Carbon monoxide detection required by Sections 915.1 through 915.2.3 shall be provided by carbon monoxide alarms complying with Section 915.4 or carbon monoxide detection systems complying with Section 915.5.

CFC 915.1 - Classrooms which contain a fuel-burning appliance or a fuel-burning fireplace or are supplied by a forced-air furnace shall be provided with a carbon monoxide detexction system. Provide a carbon monoxide detection system

GENERAL NOTE:
UTLILITIES THAT SPAN BETWEEN UNITS OR ACROSS SEISMIC SEPARATION JOINTS MUST BE DESIGNED WITH A FLEXIBLE CONNECTION THAT CAN ACCOMMODATE DIFFERENTIAL MOVEMENTS

HVAC SCHEDULE

BUILDING SIZE	# OF HVAC 3 1/2 TON HVAC	4 TON HVAC	5 TON HVAC
☒ 24' x 40'	1	1	
☐ 36' x 40'		1	
☒ 48' x 40'	2		
☐ 60' x 40'		2	
☐ 72' x 40'	3		2
☐ 84' x 40'		3	
☐ 96' x 40'	4		3
☐ 108' x 40'		4	
☐ 120' x 40'	5		

HVAC SCHEDULE TYPICAL FOR WALL MTD AND ROOF MTD UNITS

2016 CALGREEN AND ENERGY CODE - COMPLIANCE SECTIONS

FILTER SPECIFICATION:

5.504.3 - ALL EXPOSED DUCT OPENINGS AND MECHANICAL EQUIPMENT SHALL BE COVERED AND PROTECTED DURING CONSTRUCTION AND SHIPMENT.

5.504.5.3 - HVAC FILTER (MERV RATING OF 8 MINIMUN OR HIGHER). ALL MECHANICAL EQUIPMENT WHICH REQUIRES A FILTER SHALL NOT BE OPERATED WITHOUT A FILTER IN PLACE.

OUTDOOR AIR QUALITY:

HVAC EQUIPMENT DOES NOT CONTAIN CFCS OR HALONS.

IDENTIFICATION STAMP
DIV. OF THE STATE ARCHITECT
APP: 01-119031 INC:
REVIEWED FOR
SS ☑ FLS ☑ ACS ☑
DATE: 10/22/2020

PROFESSIONAL STAMP

REGISTERED PROFESSIONAL ENGINEER MANNY D. FRAUSTO S2380 STRUCTURAL STATE OF CALIFORNIA

12/19/2017

THE PLANS, IDEAS & DESIGNS SHOWN ON THESE DRAWINGS ARE THE PROPERTY OF R&S TAVARES ASSOCIATES, INC. DEVISED SOLELY FOR THIS CONTRACT. THESE PLANS SHALL NOT BE USED, IN WHOLE OR IN PART, FOR ANY PURPOSE FOR WHICH THEY WERE NOT INTENDED WITHOUT THE EXPRESS WRITTEN CONSENT OF R&S TAVARES ASSOCIATES, INC. ©

CLIENT

CLASS LEASING LLC

1221 Harley Knox Boulevard
Perris, CA 92571

ORIGINAL PC STATE AGENCY APPROVAL

FILE NUMBER: PC-128
IDENTIFICATION STAMP
DIVISION OF THE STATE ARCHITECT
04 - 116504 INCR: 0
AC RM FLS EA SSR KER
DATE 07/19/2018

PROJECT TITLE

24' x 40' EXPANDABLE TO 120' x 40'

PRE-CHECK (PC) DOCUMENT
Code: 2016 CBC
A separate project application for construction is required.

PROJECT SPECIFIC STATE AGENCY APPROVAL

Revision Schedule

#	Description	Date

SHEET TITLE

MISCELLANEOUS NOTES & DETAILS

PROJECT NUMBER 17016A

DRAWN BY rMc/SC

CHECKED BY JA/RT

DATE 2017/06/05

SHEET NO. M0.1

SHEET OF SHEETS

C:\Users\Lee\Documents\17016 - Aries, 24x40 PC - MainFile - Low Seismic_Lee.rvt

1/4/2018 2:44:35 PM

PC DESIGN REVIEW INFORMATION
Title 24, Part 6, Energy Code
DSA Application #: 04-116504
Calculation Date/Time of Energy Report: 2018-06-23 17:00:30
Model Name and Option: **24'x40'** PC - CLASS LEASING LLC
Total Floor Area: 960 ft^2
HVAC System Type: Simple / Wall Mounted A/C

Climate Zone (Reference City)	Azimuth (Front Orientation)	TDV - Standard Design	TDV - Proposed Design	Compliance Margin
14 (Palmdale) <	30	375.47	352.44	6.13%
	< * 75	356.36	348.45	< * 2.20%
	120	374.87	352.54	5.96%
	165	377.28	352.73	6.51%
	210	375.47	352.94	6.00%
	* 255	356.36	348.45	* 2.20%
	300	374.87	352.54	5.96%
	345	377.28	352.73	6.51%
15 (Palm Springs-Intl)	30	429.08	394.12	8.15%
	* 75	411.12	390.15	* 5.10%
	120	428.02	394.06	7.93%
	165	430.55	394.04	8.48%
	210	429.08	394.12	8.15%
	* 255	411.12	390.15	* 5.10%
	300	428.02	394.06	7.93%
	345	430.55	394.04	8.48%
16 (Blue Canyon)	30	357.12	336.72	5.71%
	* 75	337.94	329.35	* 2.50%
	120	356.82	336.85	5.60%
	165	358.91	336.85	6.12%
	210	357.12	336.72	5.71%
	* 255	337.94	329.35	* 2.50%
	300	356.82	336.85	5.60%
	345	358.91	336.95	6.12%

Reference: Energy Code, Appendix NA4, Table NA4-3
Notes:
* In the event that there are identical percentages, select one.
**This table is not currently generated by the energy software.
< Least Compliance Margin Orientation

PC DESIGN REVIEW INFORMATION
Title 24, Part 6, Energy Code
DSA Application #: 04-116504
Calculation Date/Time of Energy Report: 2018-06-23 19:58:52
Model Name and Option: **120'x40'** PC - CLASS LEASING LLC
Total Floor Area: 4,800 ft^2
HVAC System Type: Simple / Wall Mounted A/C

Climate Zone (Reference City)	Azimuth (Front Orientation)	TDV - Standard Design	TDV - Proposed Design	Compliance Margin
14 (Palmdale) <	30	355.00	337.30	4.99%
	< * 75	334.48	333.12	< * 0.40%
	120	353.88	336.40	4.94%
	165	358.78	338.70	5.60%
	210	355.00	337.30	4.99%
	* 255	334.48	333.12	* 0.40%
	300	353.88	336.40	4.94%
	345	358.78	338.70	5.60%
15 (Palm Springs-Intl)	30	406.60	381.50	6.17%
	* 75	384.85	375.42	* 2.50%
	120	404.84	380.12	6.11%
	165	410.19	382.55	6.74%
	210	406.60	381.50	6.17%
	* 255	384.85	375.42	* 2.50%
	300	404.84	404.84	6.11%
	345	410.19	382.55	6.74%
16 (Blue Canyon)	30	334.47	320.27	4.25%
	* 75	314.67	312.69	* 0.60%
	120	333.94	319.52	4.32%
	165	339.48	321.33	5.35%
	210	334.47	320.27	4.25%
	* 255	314.67	312.69	* 0.60%
	300	333.94	319.52	4.32%
	345	339.48	321.33	5.35%

Reference: Energy Code, Appendix NA4, Table NA4-3
Notes:
* In the event that there are identical percentages, select one.
**This table is not currently generated by the energy software.
< Least Compliance Margin Orientation

APPROVED
DIVISION OF STATE ARCHITECT
HIGH PERFORMANCE SECTION
APP.# 04-116504 DATE: 7.10.18

A. PROJECT GENERAL INFORMATION

1.	Project Location (city)	Palmdale	8.	Standards Version	Compliance2016
2.	CA Zip Code		9.	Compliance Software (version)	EnergyPro 7.2
3.	Climate Zone	14	10.	Weather File	PALMDALE_723820_CZ2010.epw
4.	Total Conditioned Floor Area in Scope	4,800 ft^2	11.	Building Orientation (deg)	(E) 75 deg
5.	Total Unconditioned Floor Area	0 ft^2	12.	Permitted Scope of Work	NewComplete
6.	Total # of Stories (Habitable Above Grade)	1	13	Building Type(s)	Nonresidential
7.	Total # of dwelling units	0	14	Gas Type	NaturalGas

B. COMPLIANCE RESULTS FOR PERFORMANCE COMPONENTS (Annual TDV Energy Use, kBtu/ft^2-yr) — § 140.1

BUILDING COMPLIES

1. Energy Component	2. Standard Design (TDV)	3. Proposed Design (TDV)	4. Compliance Margin (TDV)	5. Percent Better than Standard
Space Heating	17.88	22.68	-4.80	-26.8%
Space Cooling	103.92	117.41	-13.49	-13.0%
Indoor Fans	88.46	85.47	2.99	3.4%
Heat Rejection	--	--	--	--
Pumps & Misc.	--	--	--	--
Domestic Hot Water	11.16	11.16	--	0.0%
Indoor Lighting	48.76	32.10	16.66	34.2%
COMPLIANCE TOTAL	**270.18**	**268.82**	**1.36**	**0.5%**
Receptacle	64.30	64.30	0.0	0.0%
Process	--	--	--	--
Other Ltg	--	--	--	--
Process Motors	--	--	--	--
TOTAL	**334.48**	**333.12**	**1.4**	**0.4%**

C. PRIORITY PLAN CHECK/ INSPECTION ITEMS (in order of highest to lowest TDV energy savings)

1st	Indoor Lighting: Check lighting
2nd	Indoor Fans: Check envelope and mechanical
3rd	Heat Rejection: Check envelope and mechanical
4th	Pumps & Misc.: Check mechanical
5th	Domestic Hot Water: Check mechanical
6th	Space Heating: Check envelope and mechanical
7th	Space Cooling: Check envelope and mechanical

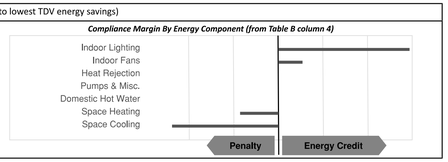

D. EXCEPTIONAL CONDITIONS

The building does not include service water heating. Verify that service water heating is not required and is not included in the design.

This project uses the Simplified Geometry Performance Modeling Approach which is not capable of modeling daylighting controls and assumes the prescriptive Secondary Daylit Control requirements are met. PRESCRIPTIVE COMPLIANCE documentation (form NRCC-LTI-02-E) for the requirements of section 140.6(d) Automatic Daylighting Controls in Secondary Daylit Zones is required.

E. HERS VERIFICATION

This Section Does Not Apply

F. ADDITIONAL REMARKS

Standard Building (Compliance)

G. COMPLIANCE PATH & CERTIFICATE OF COMPLIANCE SUMMARY

Identify which building components use the performance or prescriptive path for compliance. "NA"= not in project

For components that utilize the performance path, indicate the sheet number that includes mandatory notes on plans.

Building Component	Compliance Path		Compliance Forms *(required for submittal)*	Location of Mandatory Notes on Plans
Envelope	☒	Performance	NRCC-PRF-ENV-DETAILS (section of the NRCC-PRF-01-E)	M2.3
	☐	Prescriptive	NRCC-ENV-01 / 02 / 03 / 04 / 05 / 06-E	
	☐	NA		
Mechanical	☒	Performance	NRCC-PRF-MCH-DETAILS (section of the NRCC-PRF-01-E)	M2.3
	☐	Prescriptive	NRCC-MCH-01 / 02 / 03 / 04 / 05 / 06 / 07-E	
	☐	NA		
Domestic Hot Water	☐	Performance	NRCC-PRF-PLB-DETAILS (section of the NRCC-PRF-01-E)	
	☒	Prescriptive	NRCC-PLB-01-E	
	☐	NA		
Lighting (Indoor Conditioned)	☒	Performance	NRCC-PRF-LTI-DETAILS (section of the NRCC-PRF-01-E)	M2.3
	☐	Prescriptive	NRCC-LTI-01 / 02 / 03 / 04 / 05-E	
	☐	NA		
Covered Process: Commercial Kitchens	☐	Performance	S2 (section of the NRCC-PRF-01-E)	
	☐	Prescriptive	NRCC-PRC-01/ 03-E	
	☒	NA		
Covered Process: Computer Rooms	☐	Performance	S3 (section of the NRCC-PRF-01-E)	
	☐	Prescriptive	NRCC-PRC-01/ 04-E	
	☒	NA		
Covered Process: Laboratory Exhaust	☐	Performance	S4 (section of the NRCC-PRF-01-E)	
	☐	Prescriptive	NRCC-PRC-01/ 09-E	
	☒	NA		

G. COMPLIANCE PATH & CERTIFICATE OF COMPLIANCE SUMMARY

The following building components are only eligible for prescriptive compliance. Indicate which are relevant to the project. | *The following building components may have mandatory requirements per Part 6. Indicate which are relevant to the project.*

Yes	NA	Prescriptive Requirement	Compliance Forms	Yes	NA	Mandatory Requirement	Compliance Forms
☐	☒	Lighting (Indoor Unconditioned) §140.6	NRCC-LTI-01 / 02 / 03 / 04 / 05-E	☐ ☐	☒ ☒	Commissioning: §120.8 Simple Systems Complex Systems	NRCC-CXR-01 / 02 / 03 / 05-E NRCC-CXR-01 / 02 / 04 / 05-E
☐	☒	Lighting (Outdoor) §140.7	NRCC-LTO-01 / 02 / 03-E	☐	☒	Electrical: §130.5	NRCC-ELC-01-E
☐	☒	Lighting (Sign) §140.8	NRCC-LTS-01-E	☐	☒	Solar Ready: §110.10	NRCC-SRA-01 / 02-E
☐	☒	Solar Thermal Water Heating: §140.5	NRCC-STH-01-E	☐ ☐ ☐ ☐ ☐	☒ ☒ ☒ ☒ ☒	Covered Process: §120.6 Parking Garage Commercial Refrigeration Warehouse Refrigeration Compressed Air Process Boilers	NRCC-PRC-01-E NRCC-PRC-02-E NRCC-PRC-05-E NRCC-PRC-06/07/08-E NRCC-PRC-10-E NRCC-PRC-11-E

H. CERTIFICATE OF INSTALLATION, CERTIFICATE OF ACCEPTANCE & CERTIFICATE OF VERIFICATION SUMMARY (NRCI/NRCA/NRCV) –

Documentation Author to indicate which Certificates must be submitted for the features to be recognized for compliance
(Retain copies and verify forms are completed and signed to post in field for Field Inspector to verify).
See Tables G. and H. in MCH and LTI Details Sections for Acceptance Tests and forms by equipment.

Building Component	Compliance Forms *(required for submittal)*	Confirmed Pass	Confirmed Fail
Envelope	☒ NRCI-ENV-01-E - For all buildings	☐	☐
	☒ NRCA-ENV-02-F- NFRC label verification for fenestration	☐	☐
Mechanical	☒ NRCI-MCH-01-E - For all buildings with Mechanical Systems	☐	☐
	☒ NRCA-MCH-02-A- Outdoor Air	☐	☐
	☐ NRCA-MCH-03-A – Constant Volume Single Zone HVAC	☐	☐
	☐ NRCA-MCH-04-H- Air Distribution Duct Leakage	☐	☐
	☐ NRCA-MCH-05-A- Air Economizer Controls	☐	☐
	☐ NRCA-MCH-06-A- Demand Control Ventilation	☐	☐
	☐ NRCA-MCH-07-A – Supply Fan Variable Flow Controls	☐	☐
	☐ NRCA-MCH-08-A- Valve Leakage Test	☐	☐
	☐ NRCA-MCH-09-A – Supply Water Temp Reset Controls	☐	☐
	☐ NRCA-MCH-10-A- Hydronic System Variable Flow Controls	☐	☐
	☐ NRCA-MCH-11-A – Auto Demand Shed Controls	☐	☐
	☐ NRCA-MCH-12-A- Packaged Direct Expansion Units	☐	☐
	☐ NRCA-MCH-13-A- Air Handling Units and Zone Terminal Units	☐	☐
	☐ NRCA-MCH-14-A- Distributed Energy Storage	☐	☐
	☐ NRCA-MCH-15-A – Thermal Energy Storage	☐	☐
	☐ NRCA-MCH-16-A- Supply Air Temp Reset Controls	☐	☐
	☐ NRCA-MCH-17-A – Condensate Water Temp Reset Controls	☐	☐
	☐ NRCA-MCH-18-A- Energy Management Controls Systems	☐	☐
	☐ NRCV-MCH-04-H- Duct Leakage Test	☐	☐

H. CERTIFICATE OF INSTALLATION, CERTIFICATE OF ACCEPTANCE & CERTIFICATE OF VERIFICATION SUMMARY (NRCI/NRCA/NRCV) –

Documentation Author to indicate which Certificates must be submitted for the features to be recognized for compliance
(Retain copies and verify forms are completed and signed to post in field for Field Inspector to verify).
See Tables G. and H. in MCH and LTI Details Sections for Acceptance Tests and forms by equipment.

Building Component	Compliance Forms *(required for submittal)*	Confirmed Pass	Confirmed Fail
Plumbing	☐ NRCI-PLB-01-E - For all buildings with Plumbing Systems	☐	☐
	☐ NRCI-PLB-02-E - required on central systems in high-rise residential, hotel/motel application.	☐	☐
	☐ NRCI-PLB-03-E - Single dwelling unit systems in high-rise residential, hotel/motel application.	☐	☐
	☐ NRCI-PLB-21-E - HERS verified central systems in high-rise residential, hotel/motel application.	☐	☐
	☐ NRCI-PLB-22-E - HERS verified single dwelling unit systems in high-rise residential, hotel/motel application.	☐	☐
	☐ NRCV-PLB-21-H- HERS verified central systems in high-rise residential, hotel/motel application.	☐	☐
	☐ NRCV-PLB-22-H - HERS verified single dwelling unit systems in high-rise residential, hotel/motel application.	☐	☐
	☐ NRCI-STH-01-E - Any solar water heating	☐	☐
Indoor Lighting	☒ NRCI-LTI-01-E - For all buildings	☐	☐
	☐ NRCI-LTI-02-E - Lighting control system, or for an Energy Management Control System (EMCS)	☐	☐
	☐ NRCI-LTI-03-E - Line-voltage track lighting integral current limiter, or for a supplementary overcurrent protection panel used to energize only line-voltage track lighting	☐	☐
	☐ NRCI-LTI-04-E - Two interlocked systems serving an auditorium, a convention center, a conference room, or a theater	☐	☐
	☐ NRCI-LTI-05-E - Lighting Control Credit Power Adjustment Factor (PAF)	☐	☐
	☐ NRCI-LTI-06-E - Additional wattage installed in a video conferencing studio	☐	☐
	☒ NRCA-LTI-02-A - Occupancy sensors and automatic time switch controls.	☐	☐
	☒ NRCA-LTI-03-A - Automatic daylighting controls	☐	☐
	☐ NRCA-LTI-04-A - Demand responsive lighting controls	☐	☐
Outdoor Lighting	☐ NRCI-LTO-01-E – Outdoor Lighting	☐	☐
	☐ NRCI-LTO-02-E- EMCS Lighting Control System	☐	☐
	☐ NRCA-LTO-02-A - Outdoor Lighting Control	☐	☐
Sign Lighting	☐ NRCI-LTS-01-E – Sign Lighting	☐	☐
Electrical	☐ NRCI-ELC-01-E - Electrical Power Distribution	☐	☐
Photovoltaic	☐ NRCI-SPV-01-E Photovoltaic Systems	☐	☐

IDENTIFICATION STAMP
DIV. OF THE STATE ARCHITECT
APP: 01-119031 INC:
REVIEWED FOR
SS ☑ FLS ☑ ACS ☑
DATE: 10/22/2020

PROFESSIONAL STAMP

REGISTERED PROFESSIONAL ENGINEER
MANNY D. FRANCO
C-23801
STRUCTURAL
STATE OF CALIFORNIA

12/19/2017

THE PLANS, IDEAS & DESIGNS SHOWN ON THESE DRAWINGS ARE THE PROPERTY OF R&S TAVARES ASSOCIATES, INC. DEVISED SOLELY FOR THIS CONTRACT. THESE PLANS SHALL NOT BE USED, IN WHOLE OR IN PART, FOR ANY PURPOSE FOR WHICH THEY WERE NOT INTENDED WITHOUT THE EXPRESS WRITTEN CONSENT OF R&S TAVARES ASSOCIATES, INC. ©

CLIENT

CLASS LEASING LLC
1221 Harley Knox Boulevard
Perris, CA 92571

ORIGINAL PC STATE AGENCY APPROVAL
FILE NUMBER: PC-128
IDENTIFICATION STAMP
DIVISION OF THE STATE ARCHITECT
04 - 116504 INCR: 0
AC RM FLS EA SSR KER
DATE 07/19/2018

PROJECT TITLE
24' x 40'
EXPANDABLE TO
120' x 40'

PRE-CHECK (PC) DOCUMENT
Code: [2016] **CBC**
A separate project application for construction is required.

PROJECT SPECIFIC STATE AGENCY APPROVAL

Revision Schedule

#	Description	Date

SHEET TITLE
120'x40' T24 CZ 16
(WALL AC)

PROJECT NUMBER
17016A

DRAWN BY
rMc/SC

CHECKED BY
JA/RT

DATE
07/05/2018

SHEET NO.
M2.1

SHEET OF SHEETS

3/8/2018 2:19:41 PM C:\Users\Andrew\Documents\17016 - Aries, 24x40 PC - MainFile - Low Seismic_Andrew.rvt

H. CERTIFICATE OF INSTALLATION, CERTIFICATE OF ACCEPTANCE & CERTIFICATE OF VERIFICATION SUMMARY (NRCI/NRCA/NRCV) – Documentation Author to indicate which Certificates must be submitted for the features to be recognized for compliance (Retain copies and verify forms are completed and signed to post in field for Field Inspector to verify). See Tables G. and H. in MCH and LTI Details Sections for Acceptance Tests and forms by equipment.

Building Component	Compliance Forms *(required for submittal)*	Confirmed Pass	Confirmed Fail
Covered Process	☐ NRCI-PRC-01-E Covered Processes	☐	☐
	☐ NRCA-PRC-01-F- Compressed Air Systems	☐	☐
	☐ NRCA-PRC-02-F- Kitchen Exhaust	☐	☐
	☐ NRCA-PRC-03-F- Garage Exhaust	☐	☐
	☐ NRCA-PRC-04-F- Refrigerated Warehouse- Evaporator Fan Motor Controls	☐	☐
	☐ NRCA-PRC-05-F- Refrigerated Warehouse- Evaporative Condenser Controls	☐	☐
	☐ NRCA-PRC-06-F- Refrigerated Warehouse- Air Cooled Condenser Controls	☐	☐
	☐ NRCA-PRC-07F- Refrigerated Warehouse- Variable Speed Compressor	☐	☐
	☐ NRCA-PRC-08-F- Electrical Resistance Underslab Heating System	☐	☐

I. ENVELOPE GENERAL INFORMATION (See NRCC-PRF-ENV-DETAILS for more information)

						Confirmed Pass	Confirmed Fail
1.	Total Conditioned Floor Area	4,800 ft^2	5.	Number of Floors Above Grade	1		
2.	Total Unconditioned Floor Area	0 ft^2	6.	Number of Floors Below Grade	0		
3.	Addition Conditioned Floor Area	0 ft^2					
4.	Addition Unconditioned Floor Area	0 ft^2					

7. Opaque Surfaces & Orientation	8. Total Gross Surface Area	9. Total Fenestration Area	10. Window to Wall Ratio	Pass	Fail
North Wall	1,200 ft^2	160 ft^2	13.3%	☐	☐
East Wall	400 ft^2	0 ft^2	00.0%	☐	☐
South Wall	1,200 ft^2	160 ft^2	13.3%	☐	☐
West Wall	400 ft^2	0 ft^2	00.0%	☐	☐
Total:	**3,200 ft^2**	**320 ft^2**	**10.0%**	☐	☐
Roof	4,800 ft^2	30 ft^2	00.6%	☐	☐

J. FENESTRATION ASSEMBLY SUMMARY § 110.6 — Confirmed

1. Fenestration Assembly Name / Tag or I.D.	2. Fenestration Type / Product Type / Frame Type	3. Certification Method[1]	4. Assembly Method	5. Area ft^2	6. Overall U-factor	7. Overall SHGC	8. Overall VT	9. Status[2]	Pass	Fail
Sierra Pacific Windows	VerticalFenestration FixedWindow N/A	NFRC Rated	Manufactured	320	0.35	0.24	0.50	N	☐	☐
Solatube	Skylight FixedWindow N/A	NFRC Rated	Manufactured	30	0.37	0.35	0.50	N	☐	☐

[1] *Newly installed fenestration shall have a certified NFRC Label Certificate or use the CEC default tables found in Table 110.6-A and Table 110.6-B. Center of Glass (COG) values are for the glass-only, determined by the manufacturer, and are shown for ease of verification. Site-built fenestration values are calculated per Nonresidential Appendix NA6 and are used in the analysis.*

[2] *Status: N - New, A – Altered, E – Existing*

Taking compliance credit for fenestration shading devices? (if "Yes", see NRCC-PRF-ENV-DETAILS for more information)	No

K. OPAQUE SURFACE ASSEMBLY SUMMARY § 120.7/ § 140.3 — Confirmed

1. Surface Name	2. Surface Type	3. Area (ft^2)	4. Framing Type	5. Cavity R-Value	6. Continuous R-Value	7. U-Factor / F-Factor / C-Factor	8. Status[1]	Pass	Fail
R-19 Wall Metal Stud5	ExteriorWall	3200	Metal	19	4	U-Factor: 0.104	N	☐	☐
Raised Slab Floor with R-12	ExteriorFloor	4800	Metal	11	NA	U-Factor: 0.091	N	☐	☐
Standing Seam R-30 Metal14	Roof	4800	NA	30	NA	U-Factor: 0.072	N	☐	☐

[1] *Status: N – New, A – Altered, E – Existing*

L. ROOFING PRODUCT SUMMARY § 140.3 — Confirmed

1. Product Type	2. Product Density (lb/ft^2)	3. Aged Solar Reflectance	4. Thermal Emittance	5. SRI	6. Cool Roof Credit	7. Roofing Product Description	Pass	Fail
Standing Seam R-30 Metal14	2.543	0.08	0.75	NA	No	NA	☐	☐

M. HVAC SYSTEM SUMMARY (see NRCC-PRF-MCH-DETAILS for more information) § 110.1 / § 110.2

Dry System Equipment [1] (Fan & Economizer info included below in Table N) — Confirmed

1. Equip Name	2. Equip Type	3. System Type (Simple [2] or Complex [3])	4. Qty	5. Total Heating Output (kBtu/h)	6. Supp Heat Source (Y/N)	7. Supp Heat Output (kBtuh)	8. Total Cooling Output (kBtu/h)	9. Efficiency: Cooling	9. Efficiency: Heating	10. Acceptance Testing Required? (Y/N) [4]	11. Status[5]	Pass	Fail
AC-1 to AC-5	SPVHP (Packaged1Phase)	Simple	5	40	No	0	38	EER-11.00	COP-3.40	Yes	N	☐	☐

[1] *Dry System Equipment includes furnaces, air handling units, heat pumps, etc.*

[2] *Simple Systems must complete NRCC-CXR-03-E commissioning design review form*

[3] *Complex Systems must complete NRCC-CXR-04-E commissioning design review form*

[4] *A summary of which acceptance tests are applicable is provided in NRCC-PRF-MCH-DETAILS*

[5] *Status: N - New, A – Altered, E – Existing*

Wet System Equipment Section Does Not Apply

Discrepancy between modeled and designed equipment sizing? (if "Yes", see Table F. "Additional Remarks" for an explanation)	No

N. ECONOMIZER & FAN SYSTEMS SUMMARY[1] § 140.4 — Confirmed

1. Equip Name	2. Outside Air: CFM	3. Supply Fan: CFM	3. Supply Fan: HP	3. Supply Fan: BHP	3. Supply Fan: TSP (inch WC)	3. Supply Fan: Control	4. Return Fan: CFM	4. Return Fan: HP	4. Return Fan: BHP	4. Return Fan: TSP (inch WC)	4. Return Fan: Control	5. Economizer Type (if present)	Pass	Fail
AC-1 to AC-5	360	1250	0.750	0.750	1.90	ConstantVolume	NA	NA	NA	NA	NA	NoEconomizer	☐	☐

[1] *Mechanical ventilation calculations and exhaust fans are included in the NRCC-PRF-MCH-DETAILS section*

O. EQUIPMENT CONTROLS § 120.2 — Confirmed

1. Equip Name	2. Equip Type	3. Controls	Pass	Fail
AC-1 to AC-5	SPVHP	No DCV Controls No Economizer No Supply Air Temp. Control No Optimum Start No Evaporative Cooler No Heat Recovery	☐	☐

P. SYSTEM DISTRIBUTION SUMMARY § 120.4/ § 140.4(l)

1. Equip Name	2. Equip Type	3. Duct Leakage and Sealing Required per 140.4(l)	4. Duct Leakage will be verified per NA1 and NA2	5. Ducts: Insulation R-Value	5. Ducts: Location	6. Status[1]	Pass	Fail
		Dry System Distribution					Confirmed	
AC-1 to AC-5	SPVHP	No	No	8	Unconditioned	N	☐	☐

[1] *Status: N - New, E – Existing*

Does the Project Include Zonal Systems? (if "Yes", see NRCC-PRF-MCH-DETAILS for system information)	No
Does the Project Include a Solar Hot Water System? (if "Yes", see NRCC-PRF-MCH-DETAILS for system information)	No
Multifamily or Hotel/ Motel Occupancy? (if "Yes", see NRCC-PRF-MCH-DETAILS for DHW system information)	No

Q. INDOOR CONDITIONED LIGHTING GENERAL INFO (see NRCC-PRF-LTI-DETAILS for more info)[1] § 140.6 — Confirmed

1. Occupancy Type [1]	2. Conditioned Floor Area [2] (ft^2)	3. Installed Lighting Power (Watts)	4. Lighting Control Credits (Watts)	5. Additional (Custom) Allowance: Area Category Footnotes (Watts)	5. Additional (Custom) Allowance: Tailored Method (Watts)	Pass	Fail
Classrooms, Lecture, Training, Vocational Areas	4,800	3,160	0	0	0	☐	☐
Building Totals:	**4,800**	**3,160**	**0**	**0**	**0**		

[1] *See Table 140.6-C*

DOCUMENTATION AUTHOR'S DECLARATION STATEMENT § 10-103

I certify that this Certificate of Compliance documentation is accurate and complete.

Documentation Author Name: LAL B. SAHGAL	Signature: Lal Sahgal
Company: LSA CONSULTING ENGINEERS	
Address: 83, WINDSWEPT WAY	Signature Date: 06/25/2018
City/State/Zip: MISSION VIEJO CA. 92692	CEA Identification (If applicable): M26885
Phone: (949)830-4746	

RESPONSIBLE PERSON'S DECLARATION STATEMENT

I certify the following under penalty of perjury, under the laws of the State of California:

1	I hereby affirm that I am eligible under the provisions of Division 3 of the Business and Professions Code to sign this document as the person responsible for its preparation; and that I am licensed in the State of California as a civil engineer, mechanical engineer, electrical engineer, or I am a licensed architect.
2	I affirm that I am eligible under the provisions of Division 3 of the Business and Professions Code by section 5537.2 or 6737.3 to sign this document as the person responsible for its preparation; and that I am a licensed contractor performing this work.
3	I affirm that I am eligible under Division 3 of the Business and Professions Code to sign this document because it pertains to a structure or type of work described as exempt pursuant to Business and Professions Code Sections 5537, 5538 and 6737.1.

Responsible Envelope Designer Name: Manny D, Frisch	Signature: Manny D. Frisch	
Company: R & S Tavares Associates		
Address: 11777 Bernardo Plaza Ct. #105	Date Signed: 06/25/2018	
City/State/Zip: San Diego Ca. 92128	Declaration Statement Type:	
Phone: (858)444-3344 Ext. 1810	Title:	License #: S3380
Responsible Lighting Designer Name: Ralph M. Tavares	Signature:	
Company: R & S Tavares Associates		
Address: 11777 Bernardo Plaza Ct. #105	Date Signed: 06/25/2018	
City/State/Zip: San Diego Ca. 92128	Declaration Statement Type:	
Phone: (858)444-3344 Ext. 1801	Title:	License #:
Responsible Mechanical Designer Name: Lal Sahgal	Signature: Lal Sahgal	
Company: LSA Consulting Engineers		
Address: 83, Windswept Way	Date Signed: 06/25/2018	
City/State/Zip: Mission Viejo Ca. 92692	Declaration Statement Type:	
Phone: (949)830-4746	Title:	License #: M26885

[2] *See NRCC-LTI-01-E for unconditioned spaces*

[3] *Lighting information for existing spaces modeled is not included in the table*

R. INDOOR CONDITIONED LIGHTING SCHEDULE (Adapted from NRCC-LTI-01-E)[1] § 130.0

Luminaire Schedule (includes all permanent installed lighting in conditioned space, and portable lighting over 0.3 w/ft^2 in offices)		Installed Watts (Conditioned)					Confirmed	
Name or Item Tag	Complete Luminaire Description (i.e., 3-lamp fluorescent troffer, F32T8, one dimmable electronic ballast)	Watts per luminaire	How Wattage is Determined: CEC Default from NA8	How Wattage is Determined: According to §130.0(c)	Total Number Luminaires	Installed Watts	Pass	Fail
L-1	3-LAMP / 32W / T8	96	Yes	No	40	3,840	☐	☐

[1] *If lighting power densities were used in the compliance model Building Departments will need to check prescriptive forms for Luminaire Schedule details.*

S1. COVERED PROCESS SUMMARY – ENCLOSED PARKING GARAGES § 140.9

This Section Does Not Apply

S2. COVERED PROCESS SUMMARY – COMMERCIAL KITCHENS § 140.9

This Section Does Not Apply

S3. COVERED PROCESS SUMMARY – COMPUTER ROOMS § 140.9

This Section Does Not Apply

S4. COVERED PROCESS SUMMARY – LABORATORY EXHAUSTS § 140.9

This Section Does Not Apply

T. UNMET LOAD HOURS

This Section Does Not Apply

U. ENERGY USE SUMMARY

Energy Component	Standard Design Site (MWh)	Proposed Design Site (MWh)	Margin (MWh)	Standard Design Site (MBtu)	Proposed Design Site (MBtu)	Margin (MBtu)
Space Heating	--	6.4	--	51.5	--	--
Space Cooling	12.2	14.3	-2.1	--	--	--

U. ENERGY USE SUMMARY

Energy Component	Standard Design Site (MWh)	Proposed Design Site (MWh)	Margin (MWh)	Standard Design Site (MBtu)	Proposed Design Site (MBtu)	Margin (MBtu)
Indoor Fans	18.2	18.1	0.1	--	--	--
Heat Rejection	--	--	--	--	--	--
Pumps & Misc.	--	--	--	--	--	--
Domestic Hot Water	--	--	--	37.1	37.1	0.0
Indoor Lighting	9.8	6.5	3.3	--	--	--
COMPLIANCE TOTAL	**40.2**	**45.3**	**-5.1**	**88.6**	**37.1**	**51.5**
Receptacle	12.7	12.7	0.0	--	--	--
Process	--	--	--	--	--	--
Other Ltg	--	--	--	--	--	--
Process Motors	--	--	--	--	--	--
TOTAL	**52.9**	**58.0**	**-5.1**	**88.6**	**37.1**	**51.5**

APPROVED
DIVISION OF STATE ARCHITECT
HIGH PERFORMANCE SECTION
APP.# 04-116504 DATE: 7-10-18

IDENTIFICATION STAMP
DIV. OF THE STATE ARCHITECT
APP: 01-119031 INC:
REVIEWED FOR
SS ☑ FLS ☑ ACS ☑
DATE: 10/22/2020

PROFESSIONAL STAMP

REGISTERED PROFESSIONAL ENGINEER MANNY D. FRISCH No. S-3380 STRUCTURAL STATE OF CALIFORNIA

12/19/2017

THE PLANS, IDEAS & DESIGNS SHOWN ON THESE DRAWINGS ARE THE PROPERTY OF R&S TAVARES ASSOCIATES, INC. DEVISED SOLELY FOR THIS CONTRACT. THESE PLANS SHALL NOT BE USED, IN WHOLE OR IN PART, FOR ANY PURPOSE FOR WHICH THEY WERE NOT INTENDED WITHOUT THE EXPRESS WRITTEN CONSENT OF R&S TAVARES ASSOCIATES, INC. ©

CLIENT

CLASS LEASING LLC
1221 Harley Knox Boulevard
Perris, CA 92571

ORIGINAL PC STATE AGENCY APPROVAL
FILE NUMBER: PC-128
IDENTIFICATION STAMP
DIVISION OF THE STATE ARCHITECT
04 - 116504 INCR: 0
AC RM FLS EA SSR KER
DATE 07/19/2018

PROJECT TITLE
24' x 40'
EXPANDABLE TO
120' x 40'

PRE-CHECK (PC) DOCUMENT
Code: [2016] **CBC**
A separate project application for construction is required.

PROJECT SPECIFIC STATE AGENCY APPROVAL

Revision Schedule

#	Description	Date

SHEET TITLE
120'x40' T24 CZ 16
(WALL AC)

PROJECT NUMBER
17016A

DRAWN BY
rMc/SC

CHECKED BY
JA/RT

DATE
07/05/2018

SHEET NO.
M2.2

SHEET OF SHEETS

C:\Users\Andrew\Documents\17016 - Arias, 24x40 PC - MainFile - Low Seismic_Andrew.rvt

3/8/2018 2:19:42 PM

Project Name:	120X40 (PC 04-116504) - Wall AC	NRCC-PRF-01-E	Page 14 of 19
Project Address:	Climate Zone 14 Palmdale	Calculation Date/Time:	19:52, Sat, Jun 23, 2018
Compliance Scope:	NewComplete	Input File Name:	120X40 PC - CZ14(Wall AC)R75RSPV.cibd16x

NRCC-PRF-ENV-DETAILS -SECTION START-

A. OPAQUE SURFACE ASSEMBLY DETAILS

1. Surface Name	2. Surface Type	3. Description of Assembly Layers	4. Notes	Confirmed Pass	Confirmed Fail
R-19 Wall Metal Stud5	ExteriorWall	Stucco - 7/8 in. Vapor permeable felt - 1/8 in. Metal framed wall, 16in. OC, 5.5in., R-19 Gypsum Board - 1/2 in. Expanded Polystyrene - EPS - 1 in. R4.2		☐	☐
Raised Slab Floor with R-12	ExteriorFloor	Concrete - 140 lb/ft3 - 4 in. Metal framed floor, 24in. OC, 5.5in., R-11 Plywood - 1/2 in. Carpet - 3/4 in.		☐	☐
Standing Seam R-30 Metal14	Roof	Metal Standing Seam - 1/16 in. Metal standing seam roof, R-30		☐	☐

B. OVERHANG DETAILS (Adapted from NRCC-ENV-02-E)

This Section Does Not Apply

C. OPAQUE DOOR SUMMARY

This Section Does Not Apply

Project Name:	120X40 (PC 04-116504) - Wall AC	NRCC-PRF-01-E	Page 15 of 19
Project Address:	Climate Zone 14 Palmdale	Calculation Date/Time:	19:52, Sat, Jun 23, 2018
Compliance Scope:	NewComplete	Input File Name:	120X40 PC - CZ14(Wall AC)R75RSPV.cibd16x

NRCC-PRF-MCH-DETAILS -SECTION START-

A. MECHANICAL VENTILATION AND REHEAT *(Adapted from 2016-NRCC-MCH-03-E)*

	1. DESIGN AIR FLOWS							2. VENTILATION (§ 120.1)											Confirmed	
CONDITIONED ZONE NAME	HEATING/COOLING SYSTEM ID	DESIGN PRIMARY AIR FLOW (CFM)	DESIGN PRIMARY MINIMUM AIR FLOW (CFM)	MINIMUM PRIMARY AIR FLOW FRACTION	MAXIMUM HEATING AIR FLOW (CFM)	MAXIMUM HEATING AIR FLOW FRACTION	DDC CONTROL (Y/N)	VENT SYSTEM ID	CONDITIONED AREA (ft2)	MIN. VENT PER AREA (CFM/ft2)	DESIGN NUM. OF PEOPLE	MIN. VENT PER PERSON (CFM/person)	REQ'D VENT AIR FLOW (CFM)	DESIGN VENT AIR FLOW (CFM)	TRANSFER AIRFLOW (CFM)	DCV (Y/N)	Operable Window Interlock § 140.4(n) (Y/N)	Pass	Fail
1-First Floor	AC-1 to AC-5	6,250	NA	NA	NA	NA	N	AC-1 to AC-5	4,800	NA	120.00	15.00	1,800	1,800	NA	N	NA	☐	☐
								TOTAL	4,800		120.00		1,800	1,800	NA			☐	☐

B. ZONAL SYSTEM AND TERMINAL UNIT SUMMARY § 140.4

1.	2.	3.	4.		5.	6.	7.			8.			Confirmed	
System ID	System Type	Qty	Rated Capacity (kBtuh) Heating	Rated Capacity (kBtuh) Cooling	Economizer	Zone Name	Airflow (cfm) Design	Min.	Min. Ratio	Fan BHP	Cycles	ECM Motor	Pass	Fail
1-First Floor-Trm	Uncontrolled	5	NA	NA	NA	1-First Floor	6250	NA	NA	NA	NA	☐	☐	☐

C. EXHAUST FAN SUMMARY

This Section Does Not Apply

D. DHW EQUIPMENT SUMMARY – *(Adapted from NRCC-PLB-01)*

This Section Does Not Apply

Project Name:	120X40 (PC 04-116504) - Wall AC	NRCC-PRF-01-E	Page 16 of 19
Project Address:	Climate Zone 14 Palmdale	Calculation Date/Time:	19:52, Sat, Jun 23, 2018
Compliance Scope:	NewComplete	Input File Name:	120X40 PC - CZ14(Wall AC)R75RSPV.cibd16x

E. MULTI-FAMILY CENTRAL DHW SYSTEM DETAILS

This Section Does Not Apply

F. SOLAR HOT WATER HEATING SUMMARY (Adapted from NRCC-STH-01)

This Section Does Not Apply

G. MECHANICAL HVAC ACCEPTANCE TESTS & FORMS *(Adapted from 2016-NRCC-MCH-01-E)* § RA4

Declaration of Required Acceptance Certificates (NRCA) – Acceptance Certificates that may be submitted. (Retain copies and verify forms are completed and signed to post in field for Field Inspector to verify).

Test Description		MCH-02A	MCH-03A	MCH-04A	MCH-05A	MCH-06A	MCH-07A	MCH-08A	MCH-09A	MCH-10A	MCH-11A	MCH-12A	MCH-13A	MCH-14A	MCH-15A	MCH-16A	MCH-17A	MCH-18A	Confirmed	
Equipment Requiring Testing or Verification	# of units	Outdoor Air	Single Zone Unitary	Air Dist. Ducts	Economizer Controls	DCV	Supply Fan VAV	Valve leakage	Supply Water Temp. Reset	Hyd. Variable Flow Control	Auto Demand Shed Control	FDD for DX Units	Auto FDD for Air & Zone	Dist. Energy Storage DX AC	TES Systems	Supply Air Temp. Reset	Condenser Water Reset Controls	ECMS	Pass	Fail
AC-1 to AC-5	5	X	--	--	--	--	--	--	--	--	--	--	--	--	--	--	--	--	☐	☐

H. EVAPORATIVE COOLER SUMMARY

This Section Does Not Apply

Project Name:	120X40 (PC 04-116504) - Wall AC	NRCC-PRF-01-E	Page 17 of 19
Project Address:	Climate Zone 14 Palmdale	Calculation Date/Time:	19:52, Sat, Jun 23, 2018
Compliance Scope:	NewComplete	Input File Name:	120X40 PC - CZ14(Wall AC)R75RSPV.cibd16x

NRCC-PRF-LTI-DETAILS -SECTION START-

A. INDOOR CONDITIONED LIGHTING CONTROL CREDITS (Adapted from NRCC-LTI-02-E) § 140.6

Lighting Control Credits Schedule (includes all lighting controls installed in conditioned space for compliance credit per §140.6(a)2 and Table 140.6-A)				Control Credit Calculation			√ If Acceptance Test Required	Confirmed	
Location in Building	Occupancy Type (must meet requirements of Table 140.6-A)	Type/Description of Lighting Control (i.e., partial on occupancy sensor, manual dimming, etc.)	# of Units	Watts of Controlled Lighting	Power Adjustment Factor	Control Credit Watts		Pass	Fail
S-1-First Floor	Classrooms, Lecture, Training, Vocational Areas	- none specified -	1		0.00	0		☐	☐

B. INDOOR CONDITIONED LIGHTING MANDATORY LIGHTING CONTROLS (Adapted from NRCC-LTI-02-E) § 130.1

This Section Does Not Apply

§130.1(a) = Manual area controls; §130.0(b) = Multi Level; §130.1(c) = Auto Shut-Off; §130.1(d) = Mandatory Daylight; §130.1(e) = Demand Responsive

C. TAILORED METHOD CONDITIONED LIGHTING POWER ALLOWANCE SUMMARY AND CHECKLIST (Adapted from NRCC-LTI-04-E) § 140.6

General lighting power (see Table D)	0
General lighting power from special function areas (see Table E)	NA
Additional "use it or lose it" (See Table G)	0
Total watts	0

D. GENERAL LIGHTING POWER (Adapted from NRCC-LTI-04-E) § 140.6-D

This Section Does Not Apply

E. GENERAL LIGHTING FROM SPECIAL FUNCTION AREAS (Adapted from NRCC-LTI-04-E) § 140.6(c) 3H

Room Number	Primary Function Area	Illuminance Value (LUX)	Room Cavity Ratio (Table G)	Allowed LPD	Floor Area (ft^2)	Allowed Watts	Confirmed Pass	Confirmed Fail
NA	NA	NA	NA	NA	NA	NA	☐	☐

Note: Tailored Method for Special Function Areas is not currently implemented

Project Name:	120X40 (PC 04-116504) - Wall AC	NRCC-PRF-01-E	Page 18 of 19
Project Address:	Climate Zone 14 Palmdale	Calculation Date/Time:	19:52, Sat, Jun 23, 2018
Compliance Scope:	NewComplete	Input File Name:	120X40 PC - CZ14(Wall AC)R75RSPV.cibd16x

F. ROOM CAVITY RATIO (Adapted from NRCC-LTI-04-E)

Rectangular Spaces

Room Number	Task/Activity Description	Room Length (ft)	Room Width (ft)	Room Cavity Height (ft)	RCR	Confirmed Pass	Confirmed Fail
NA	NA	NA	NA	NA	NA	☐	☐

Non-Rectangular Spaces

This Section Does Not Apply

Note: All applicable spaces are listed under the Non-Rectangular Spaces table

G. ADDITIONAL "USE IT OR LOSE IT" (Adapted from NRCC-LTI-04-E)

1. Wall Display	2. Combined Floor Display and Task Lighting	3. Combined Ornamental and Special Effects Lighting	4. Very Valuable Merchandise	Allowed Watts	Confirmed Pass	Confirmed Fail
0	0	0	0	**0**	☐	☐

5. Wall Display

This Section Does Not Apply

6. Floor Display and Task Lighting

This Section Does Not Apply

7. Combined Ornamental and Special Effects Lighting

This Section Does Not Apply

8. Very Valuable Merchandise

This Section Does Not Apply

Project Name:	120X40 (PC 04-116504) - Wall AC	NRCC-PRF-01-E	Page 19 of 19
Project Address:	Climate Zone 14 Palmdale	Calculation Date/Time:	19:52, Sat, Jun 23, 2018
Compliance Scope:	NewComplete	Input File Name:	120X40 PC - CZ14(Wall AC)R75RSPV.cibd16x

H. INDOOR & OUTDOOR LIGHTING ACCEPTANCE TESTS & FORMS (Adapted from NRCC-LTI-01-E and NRCC-LTO-01-E) § 130.4

Declaration of Required Acceptance Certificates (NRCA) –Acceptance Certificates that must be verified in the field. (Retain copies and verify forms are completed and signed to post in field for Field Inspector to verify).

Test Description		Indoor			Outdoor	Confirmed	
		NRCA-LTI-02-A	NRCA-LTI-03-A	NRCA-LTI-04-A	NRCA-LTO-02-A	Pass	Fail
Equipment Requiring Testing or Verification	# of units	Occ Sensors / Auto Time Switch	Auto Daylight	Demand Responsive	Outdoor Controls		
Occupant Sensors	0	☒	☐	☐	☐	☐	☐
Automatic Time Switch	0	☒	☐	☐	☐	☐	☐
Automatic Daylighting	0	☐	☒	☐	☐	☐	☐
Demand Responsive	0	☐	☐	☐	☐	☐	☐
Outdoor Controls	0	☐	☐	☐	☐	☐	☐

APPROVED
DIVISION OF STATE ARCHITECT
HIGH PERFORMANCE SECTION
APP.# 04-116504 DATE 7-10-18

IDENTIFICATION STAMP
DIV. OF THE STATE ARCHITECT
APP: 01-119031 INC:
REVIEWED FOR
SS ☑ FLS ☑ ACS ☑
DATE: 10/22/2020

PROFESSIONAL STAMP

REGISTERED PROFESSIONAL ENGINEER
MANNY D. FRISCH
No. S3380
STRUCTURAL
STATE OF CALIFORNIA

12/19/2017

THE PLANS, IDEAS & DESIGNS SHOWN ON THESE DRAWINGS ARE THE PROPERTY OF R&S TAVARES ASSOCIATES, INC. DEVISED SOLELY FOR THIS CONTRACT. THESE PLANS SHALL NOT BE USED, IN WHOLE OR IN PART, FOR ANY PURPOSE FOR WHICH THEY WERE NOT INTENDED WITHOUT THE EXPRESS WRITTEN CONSENT OF R&S TAVARES ASSOCIATES, INC. ©

CLIENT

CLASS LEASING LLC
1221 Harley Knox Boulevard
Perris, CA 92571

ORIGINAL PC STATE AGENCY APPROVAL
FILE NUMBER: PC-128
IDENTIFICATION STAMP
DIVISION OF THE STATE ARCHITECT
04 - 116504 INCR: 0
AC RM FLS EA SSR KER
DATE 07/19/2018

PROJECT TITLE
24' x 40' EXPANDABLE TO 120' x 40'

PRE-CHECK (PC) DOCUMENT
Code: 2016 CBC
A separate project application for construction is required.

PROJECT SPECIFIC STATE AGENCY APPROVAL

Revision Schedule

#	Description	Date

SHEET TITLE
120'x40' T24 CZ 16 (WALL AC)

PROJECT NUMBER 17016A

DRAWN BY rMc/SC

CHECKED BY JA/RT

DATE 07/05/2018

SHEET NO. M2.3

SHEET OF SHEETS

3/8/2018 2:19:43 PM C:\Users\Andrew\Documents\17016 - Aries, 24x40 PC - MainFile - Low Seismic_Andrew.rvt

ENVELOPE MANDATORY MEASURES: NONRESIDENTIAL — ENV-MM

Project Name	Date
120X40 (PC 04-116504) - Wall AC	*6/23/2018*

DESCRIPTION

Building Envelope Measures:

§110.8(a):	Installed insulating material shall have been certified by the manufacturer to comply with the California Quality Standards for insulating material, Title 20 Chapter 4, Article 3.
§110.8(c):	All Insulating Materials shall be installed in compliance with the flame spread rating and smoke density requirements of Sections 2602 and 707 of Title 24, Part 2.
§110.8(g):	Heated slab floors shall be insulated according to the requirements in Table 110.8-A.
§110.7(a):	All Exterior Joints and openings in the building that are observable sources of air leakage shall be caulked, gasketed, weatherstripped or otherwise sealed.
§110.6(a):	Manufactured fenestration products and exterior doors shall have air infiltration rates not exceeding 0.3 cfm/ft.² of window area, 0.3 cfm/ft.² of door area for residential doors, 0.3 cfm/ft.² of door area for nonresidential single doors (swinging and sliding), and 1.0 cfm/ft.² for nonresidential double doors (swinging).
§110.6(a):	Fenestration U-factor shall be rated in accordance with NFRC 100, or the applicable default U-factor.
§110.6(a) :	Fenestration SHGC shall be rated in accordance with NFRC 200, or NFRC 100 for site-built fenestration, or the applicable default SHGC.
§110.6(b):	Site Constructed Doors, Windows and Skylights shall be caulked between the unit and the building, and shall be weatherstripped (except for unframed glass doors and fire doors).
§120.7(a):	The opaque portions of the roof/ceiling that separates conditioned spaces from unconditioned spaces or ambient air shall meet the applicable U-Factor requirements as follows: **Metal Building-** The weighted average U-factor of the roof assembly shall not exceed 0.098. **Wood Framed and Others-** The weighted average U-factor of the roof assembly shall not exceed 0.075.
§120.7(b):	The opaque portions of walls that separate conditioned spaces from unconditioned spaces or ambient air shall meet the applicable U-factor as follows: **Metal Building-** The weighted average U-factor of the wall assembly shall not exceed 0.113. **Metal Framed-** The weighted average U-factor of the wall assembly shall not exceed 0.151. **Light Mass Walls-** A 6 inch or greater Hollow Core Concrete Masonry Unit shall have a U-factor not to exceed 0.440. **Heavy Mass Walls-** An 8 inch or greater Hollow Core Concrete Masonry Unit shall have a U-factor not to exceed 0.690. **Wood Framed and Others-** The weighted average U-factor of the wall assembly shall not exceed 0.110. **Spandrel Panels and Opaque Curtain Wall-** The weighted average U-factor of the spandrel panels and opaque curtain wall assembly shall not exceed 0.280. **Demising Walls-**. The opaque portions of framed demising walls shall meet the requirements of Item A or B below: A. Wood framed walls shall be insulated to meet a U-factor not greater than 0.099. B. Metal Framed walls shall be insulated to meet a U-factor not greater than 0.151.
§120.7(c):	The opaque portions of floors and soffits that separate conditioned spaces from unconditioned spaces or ambient air shall meet the applicable U-Factor requirements as follows: **Raised Mass Floors-** Shall have a minimum of 3 inches of lightweight concrete over a metal deck or the weighted average U-factor of the floor assembly shall not exceed 0.269. **Other Floors-**The weighted average U-factor of the floor assembly shall not exceed 0.071.

Mandatory Measures: The following notes (items) represent the Mandatory Measures for all buildings.

Heat pumps with supplementary electric resistance heaters shall have controls:

1) That prevent supplementary heater operation when the heating load can be met by the heat pump alone; and

2) In which the cut-on temperature for compression heating is higher than the cut-on temperature for supplementary heating, and the cut-off temperature for compression heating is higher than the cut-off temperature for supplementary heating.

Sec. 110.2 (b)

The minimum rate of outdoor air required per Section 120.1 (b) 2 shall be supplied to each space at all time the space is usually occupied.

Sec. 120.1 (c) 3

The Lesser of the minimum rate of outdoor air required by Sec. 120.1 (b) 2, or three complete air changes shall be supplied to the entire building during the one-hour period immediately before the building is normally occupied.

Sec. 120.1 (c) 2

Hotel/Motel Guest Room Thermostats shall have numeric temperature set points in degrees F; and set point stops accessible only to authorized personnel, to restrict over-heating and over-cooling.

Sec. 120.2 (c)

All air distribution system ducts and plenums, including, but not limited to, building cavities, mechanical closets, air-handler boxes and support platforms used as ducts or plenums, shall be installed, sealed and insulated to meet the requirements of chapter 6 of the 2001 CMC. Supply-air and return-air ducts conveying heated or cooled air shall be insulated to a minimum installed level of R-8, unless ducts are in conditioned space.

Sec. 120.4 (a)

The thermostatic controls for HVAC systems shall meet the following requirements as applicable:

a) Each space conditioning zone shall be controlled by an individual thermostatic control that responds to temperature within the zone and meets the applicable requirements of Subsection (b).

b) Each Thermostatic control required by Subsection (a) shall be capable of being set locally or remotely by adjustment or selection of sensors to control:

1) Comfort heating down to 55°F or lower.

2) Comfort Cooling up to 85°F or higher.

3) Both heating and cooling, the thermostatic controls shall be capable of providing a temperature range or dead band of at least 5°F within which the supply of heating and cooling energy to the zone is shut off or reduced to a minimum.

Sec. 120.2 (a) & (b)

1) Outdoor air supply and exhaust equipment shall be installed with dampers that automatically close upon fan shutdown.

Sec. 120.2 (f)

2) Demand Control Ventilation Devices (CO2 sensors) shall be installed in accordance with Sec. 120.1 (c) 4.

Sec. 120.1 (c) 4

3) Each space-conditioning system shall be installed with controls that comply with Items 1 and 2 below:

1) Are capable of automatically shutting off the system during periods of non-use and shall have:

a) An automatic time switch control device complying with Sec. 119(c), with an accessible manual override that allows operation of the system for up to 4 hours; or
b) An occupancy sensor; or
c) A four-hour timer that can be manually operated.
d) EXCEPTION: Mechanical systems serving retail stores and associated malls, restaurants, grocery stores, churches, and theaters equipped with 7-day programmable timers.

2) Automatically restart and temporarily operate the system as required to maintain:
a) A setback heating thermostat set point, if the system provides mechanical heating; and
EXCEPTION: Area with the design winter outdoor temperature of greater than 32°F.
b) A setup cooling thermostat set point, if the system provides mechanical cooling.

EXCEPTION: Area with the design summer outdoor temperature of less than 100°F.
EXCEPTION: Systems serving hotel/motel guest rooms, if they have a readily accessible manual shut-off switch.

Sec. 120.2 (e)

4) The piping for all space conditioning and service water heating systems shall be insulated in accordance with TABLE 123-A.

Sec. 120.3

5) Service water heating systems and equipment shall meet the applicable requirements of the Appliance Efficiency Regulations as required by Sec. 110.1.

Sec. 110.3 (b)

6) Service hot water systems with circulating pumps or with electrical heat trace systems shall be capable of automatically turning off the system.

Sec. 110.3 (c) 2

7) Lavatories in public restrooms shall have controls that limit the water supply temperature to 110°F.

Sec. 110.3 (c) 3

IDENTIFICATION STAMP
DIV. OF THE STATE ARCHITECT
APP: 01-119031 INC:
REVIEWED FOR
SS ☑ FLS ☑ ACS ☑
DATE: 10/22/2020

PROFESSIONAL STAMP

REGISTERED PROFESSIONAL ENGINEER
MANNY D. FRESON
No. 4380
STRUCTURAL
STATE OF CALIFORNIA

12/19/2017

THE PLANS, IDEAS & DESIGNS SHOWN ON THESE DRAWINGS ARE THE PROPERTY OF R&S TAVARES ASSOCIATES, INC. DEVISED SOLELY FOR THIS CONTRACT. THESE PLANS SHALL NOT BE USED, IN WHOLE OR IN PART, FOR ANY PURPOSE FOR WHICH THEY WERE NOT INTENDED WITHOUT THE EXPRESS WRITTEN CONSENT OF R&S TAVARES ASSOCIATES, INC. ©

CLIENT

CLASS LEASING LLC
1221 Harley Knox Boulevard
Perris, CA 92571

ORIGINAL PC STATE AGENCY APPROVAL
FILE NUMBER: PC-128
IDENTIFICATION STAMP
DIVISION OF THE STATE ARCHITECT
04 - 116504 INCR: 0
AC RM FLS EA SSR KER
DATE 07/19/2018

PROJECT TITLE
24' x 40'
EXPANDABLE TO
120' x 40'

PRE-CHECK (PC) DOCUMENT
Code: [2016] **CBC**
A separate project application for construction is required.

PROJECT SPECIFIC STATE AGENCY APPROVAL

Revision Schedule

#	Description	Date

SHEET TITLE
120'x40' T24 CZ 16
(WALL AC)

PROJECT NUMBER
17016A

DRAWN BY
rMc/SC

CHECKED BY
JA/RT

DATE
07/05/2018

SHEET NO.
M2.4

SHEET OF SHEETS

GENERAL NOTES:

1- DUCTWORK SHALL HAVE R-8 INSULATION.

2- PER 2016 CALIFORNIA MECHANICAL CODE (CMC) SECTION 603.4.1 AND SECTION 603.5 FACTORY-MADE FLEXIBLE AIR DUCTS AND CONNECTORS SHALL BE MORE THAN FIVE (5) FEET IN LENGTH AND SHALL BE USED IN LIEU OF RIGID ELBOWS OR FITTINGS.

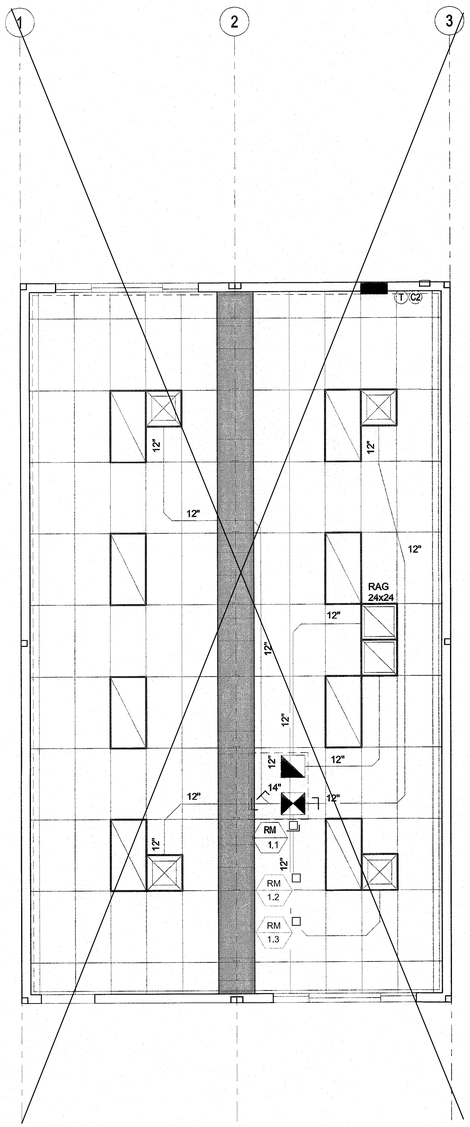

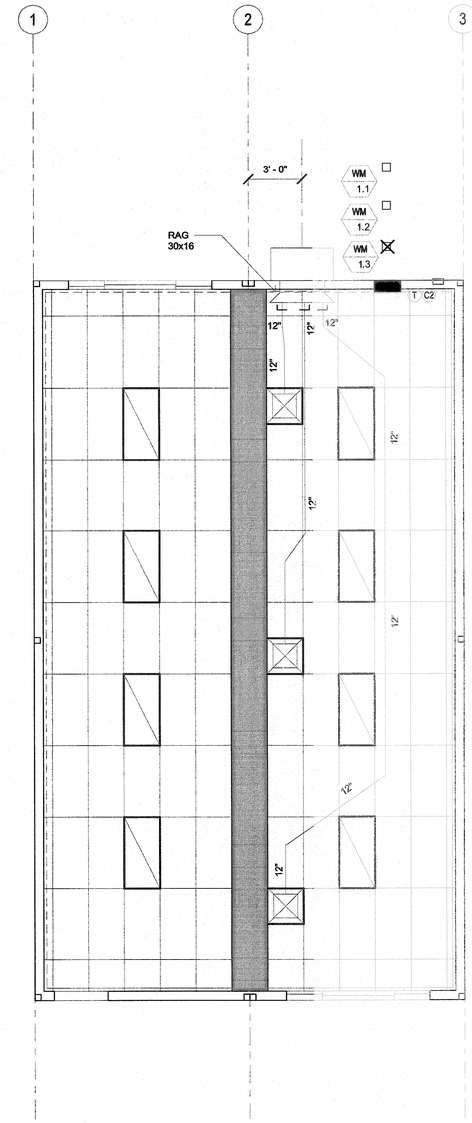

SEE ALT SHEETS FOR FLOOR CONFIGURATION

1 1/4" = 1'-0"
24x40 RM-1 MECH PLANS

12/18/2017 3:41:46 PM C:\Users\Sarah\Documents\17016 - Aries, 24x40 PC - MainFile - Low Seismic_Sarah.rvt

IDENTIFICATION STAMP
DIV. OF THE STATE ARCHITECT
APP: 01-119031 INC:
REVIEWED FOR
SS ☑ FLS ☑ ACS ☑
DATE: 10/22/2020

PROFESSIONAL STAMP

12/19/2017

THE PLANS, IDEAS & DESIGNS SHOWN ON THESE DRAWINGS ARE THE PROPERTY OF R&S TAVARES ASSOCIATES, INC. DEVISED SOLELY FOR THIS CONTRACT. THESE PLANS SHALL NOT BE USED, IN WHOLE OR IN PART, FOR ANY PURPOSE FOR WHICH THEY WERE NOT INTENDED WITHOUT THE EXPRESS WRITTEN CONSENT OF R&S TAVARES ASSOCIATES, INC. ©

CLIENT

CLASS LEASING LLC
1221 Hartley Knox Boulevard
Perris, CA 92571

ORIGINAL PC STATE AGENCY APPROVAL

FILE NUMBER: PC-128
IDENTIFICATION STAMP
DIVISION OF THE STATE ARCHITECT
04 - 116504 INCR: 0
AC RM FLS EA SSR KER
DATE 07/19/2018

PROJECT TITLE
24' x 40'
EXPANDABLE TO
120' x 40'

PRE-CHECK (PC) DOCUMENT
Code: [2016] CBC
A separate project application for construction is required.

PROJECT SPECIFIC STATE AGENCY APPROVAL

Revision Schedule

#	Description	Date

SHEET TITLE
MECHANICAL
CEILING PLAN
24x40

PROJECT NUMBER
17016A

DRAWN BY
rMc/SC

CHECKED BY
JA/RT

DATE
2017/06/05

SHEET NO.
M5.1

SHEET OF SHEETS

GENERAL NOTES:

1- DUCTWORK SHALL HAVE R-8 INSULATION.

2- PER 2016 CALIFORNIA MECHANICAL CODE (CMC) SECTION 603.4.1 AND SECTION 603.5 FACTORY-MADE FLEXIBLE AIR DUCTS AND CONNECTORS SHALL BE MORE THAN FIVE (5) FEET IN LENGTH AND SHALL BE USED IN LIEU OF RIGID ELBOWS OR FITTINGS.

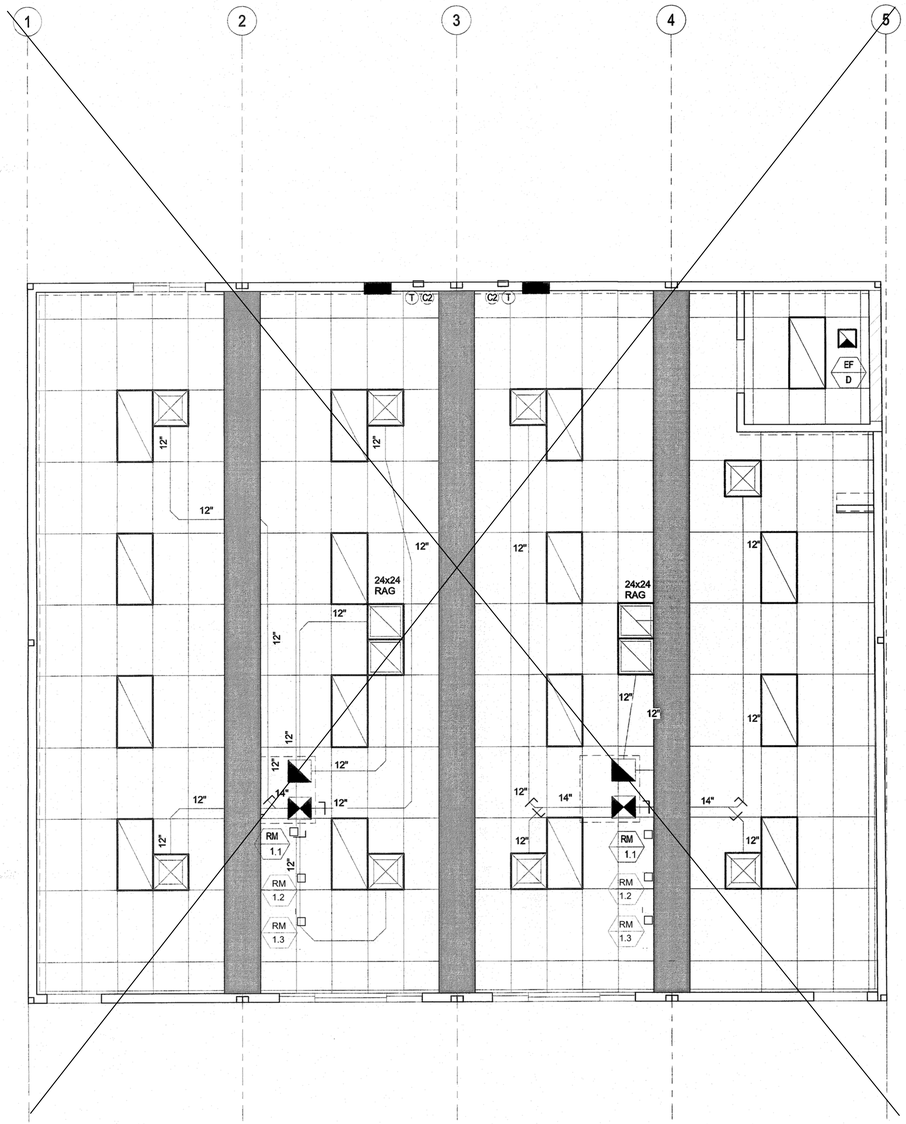

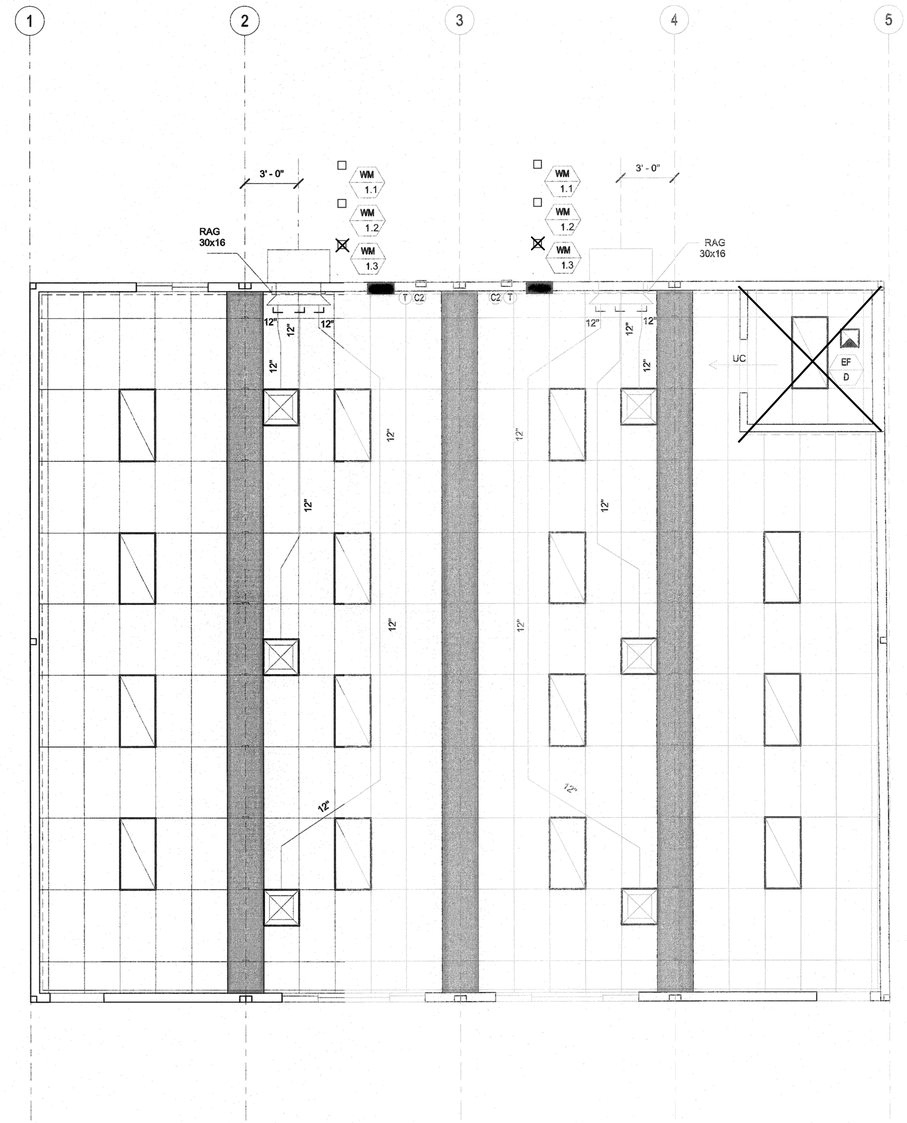

SEE ALT SHEETS FOR FLOOR CONFIGURATION

1 1/4" = 1'-0"
48x40 WM-1 MECH PLAN

IDENTIFICATION STAMP
DIV. OF THE STATE ARCHITECT
APP: 01-119031 INC:
REVIEWED FOR
SS ☑ FLS ☑ ACS ☑
DATE: 10/22/2020

PROFESSIONAL STAMP

REGISTERED PROFESSIONAL ENGINEER
MANDY D. FRANK
C-63361
STRUCTURAL
STATE OF CALIFORNIA

12/19/2017

THE PLANS, IDEAS & DESIGNS SHOWN ON THESE DRAWINGS ARE THE PROPERTY OF R&S TAVARES ASSOCIATES, INC. DEVISED SOLELY FOR THIS CONTRACT. THESE PLANS SHALL NOT BE USED, IN WHOLE OR IN PART, FOR ANY PURPOSE FOR WHICH THEY WERE NOT INTENDED WITHOUT THE EXPRESS WRITTEN CONSENT OF R&S TAVARES ASSOCIATES, INC. ©

CLIENT

CLASS LEASING LLC
1221 Harley Knox Boulevard
Perris, CA 92571

ORIGINAL PC STATE AGENCY APPROVAL

FILE NUMBER: PC-128
IDENTIFICATION STAMP
DIVISION OF THE STATE ARCHITECT
04 - 116504 INCR: 0
AC RM FLS EA SSR KER
DATE 07/19/2018

PROJECT TITLE

24' x 40'
EXPANDABLE TO
120' x 40'

PRE-CHECK (PC) DOCUMENT
Code: [2016] CBC
A separate project application for construction is required.

PROJECT SPECIFIC STATE AGENCY APPROVAL

Revision Schedule

#	Description	Date

SHEET TITLE

MECHANICAL
CEILING PLAN
48x40

PROJECT NUMBER
17016A

DRAWN BY
rMc/SC

CHECKED BY
JA/RT

DATE
2017/06/05

SHEET NO.
M7.1

SHEET OF SHEETS

12/18/2017 3:41:54 PM C:\Users\Sarah\Documents\17016 - Aries, 24x40 PC - MainFile - Low Seismic_Sarah.rvt

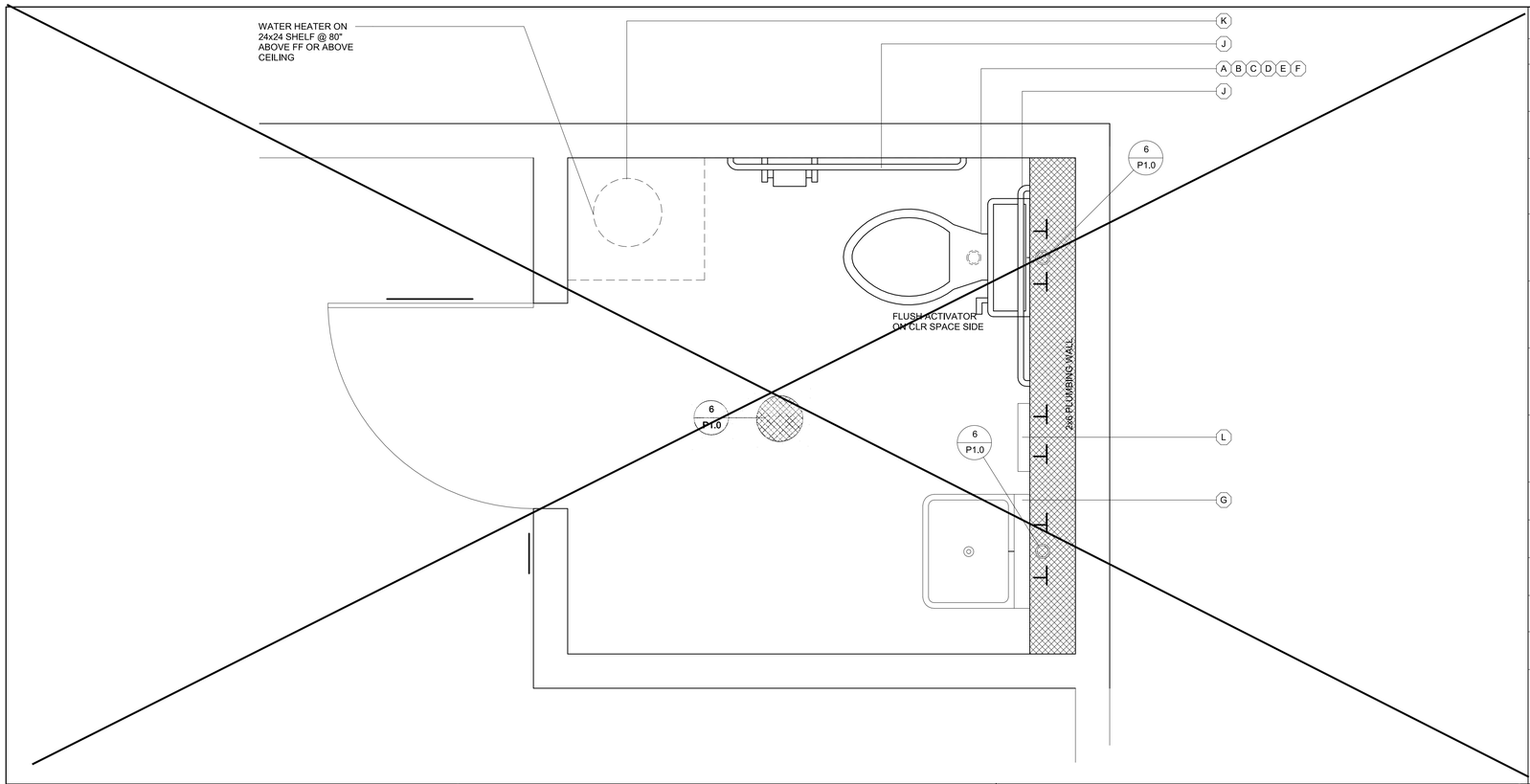

PLUMBING FIXTURE SCHEDULE

SYMBOL	FIXTURE	COLD WATER	HOT WATER	WASTE	VENT	FIXTURE DESCRIPTION (AS CALLED OUT OR APPROVED EQUAL)
A	[ADULT] WATER CLOSET TANK TYPE (ACCESSIBLE)	1/2"	-	3"	2"	STD: PROFLO ADA PF9403, (1.28 GPF) ALT: AMERICAN STANDARD ADA 2758.128, 17" HIGH, VITREOUS CHINA ELONGATED RIM, TANK TYPE; 12" ROUGH-IN; OLSONITE 10CC SOLID OPEN WHITE ELONGATED PLASTIC SEAT
C	[AGE 9 - 12] WATER CLOSET TANK TYPE (ACCESSIBLE)	1/2"	-	3"	2"	STD: PROFLO STANDARD PF9300, (1.28 GPF) ALT: AMERICAN STANDARD 2832.128, 16" HIGH, VITREOUS CHINA ELONGATED RIM, TANK TYPE; 12" ROUGH-IN; OLSONITE 10CC SOLID OPEN WHITE ELONGATED PLASTIC SEAT
A	[AGE 3 - 8] WATER CLOSET TANK TYPE (ACCESSIBLE & NON-ACCESSIBLE)	1/2"	-	3"	2"	STD: PROFLO PF1704BB, (1.28 GPF) ALT: AMERICAN STANDARD 2315.016 BABY DEVORO 10" HIGH, 10" ROUGH-IN, VITREOUS CHINA ELONGATED RIM, TANK TYPE; OLSONITE 10CC SOLID OPEN WHITE ELONGATED PLASTIC SEAT
D	[ADULT] WATER CLOSET FLOOR MTD/FLUSH (ACCESSIBLE)	1"	-	3"	2"	STD: PROFLO ADA PF1723, (1.28 GPF) ALT: AMERICAN STANDARD ADA 3043.001 "MADERA" 16 3/4" HIGH, VITREOUS CHINA ELONGATED RIM, SIPHON JET, 10" ROUGH-IN; OLSONITE 10CC SOLID OPEN WHITE ELONGATED PLASTIC SEAT; SLOAN ROYAL #111-1.28 LOW CONSUMPTION FLUSHOMETER VALVE
E	[AGE 9 - 12] WATER CLOSET FLOOR MTD/FLUSH (ACCESSIBLE)	1"	-	3"	2"	STD: PROFLO STANDARD PF1721, (1.28 GPF) ALT: AMERICAN STANDARD 2234.001 "MADERA" 15" HIGH, VITREOUS CHINA ELONGATED RIM, SIPHON JET,12" ROUGH-IN; OLSONITE 10CC SOLID OPEN WHITE ELONGATED PLASTIC SEAT; SLOAN ROYAL #111-1.28 LOW CONSUMPTION FLUSHOMETER VALVE
F	[AGE 3 - 8] WATER CLOSET FLOOR MTD/FLUSH (ACCESSIBLE & NON-ACCESSIBLE)	1"	-	3"	2"	STD: PROFLO PF1700BB (1.28 GPF) ALT: AMERICAN STANDARD BABY DEVORO 2282.010 VITREOUS CHINA ELONGATED RIM, 10" ROUGH-IN LOW CONSUMPTION CLOSET BOWL; OLSONITE 126CC SOLID OPEN WHITE ELONGATED PLASTIC SEAT; SLOAN ROYAL #111-1.28 LOW CONSUMPTION FLUSH VALVE
G	LAV (ACCESSIBLE)	1/2"	-	2"	1 1/2"	STD: AMERICAN STANDARD 0355.012 LUCERNE ALT: CRANE 1412-20 "HARWICH" 20x18" VITREOUS CHINA JAY R SMITH #722 CONCEALED HANGER; VALLEY #NL805IPS SINGLE HANDLE FAUCET (AMERICAN STANDARD 9141.011 TO BE USED FOR AGES 5-8) (0.5 GPM)
H	FLOOR DRAIN	-	-	2"	1 1/2"	JAY R SMITH #2005YA-02-P050-NB, FLOOR DRAIN TAPPED FOR PRIMER. 5" NICKEL BRONZE STRAINER w/ 1/2" MAX. STRAINER OPENINGS IN ALL DIRECTIONS
I	TRAP PRIMER	1/2"	-	-	-	PR-500 WITH 8"x12" LOCKABLE BOX, 1/2" BALL SHUT-OFF VALVE, AND PPP DU-U FRESH WATER DISTRIBUTION SYSTEM
J	GRAB BAR	-	-	-	-	BOBRICK B-6806-1-1/2 OC STAINLESS STEEL GRAB BAR - STAIN FINISH; 36" LONG ON BACK AND 42" ON SIDE
K	WATER HEATER	3/4"	3/4"	-	-	☐ A.O. SMITH #DEL-6 (6 GALLON) ☐ A.O. SMITH #DEL-10 (10 GALLON)
L	*INSTANT WATER HEATER	1/2"	1/2"	-	-	EEMAX #SP3012, 120V, 3.0KW, 25A

GENERAL NOTE:
UTILITIES THAT SPAN BETWEEN UNITS OR ACROSS SEISMIC SEPARATION JOINTS MUST BE DESIGNED WITH A FLEXIBLE CONNECTION THAT CAN ACCOMMODATE DIFFERENTIAL MOVEMENTS

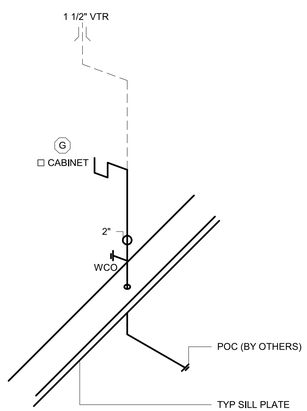

ABS SCHEDULE 40 PIPE

5 *1/2" = 1'-0"*
LAV WASTE

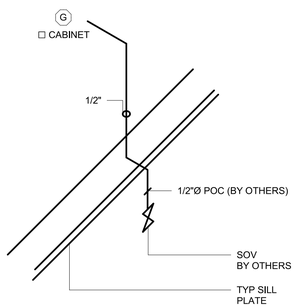

TYPE 'L' COPPER

3 *1/2" = 1'-0"*
LAV COLD WATER SUPPLY

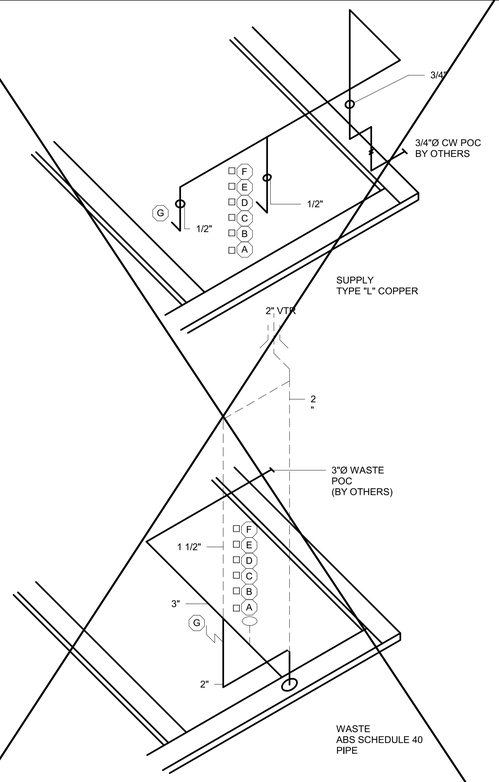

9 *1/2" = 1'-0"*
SINGLE OCC PLUMBING ISO

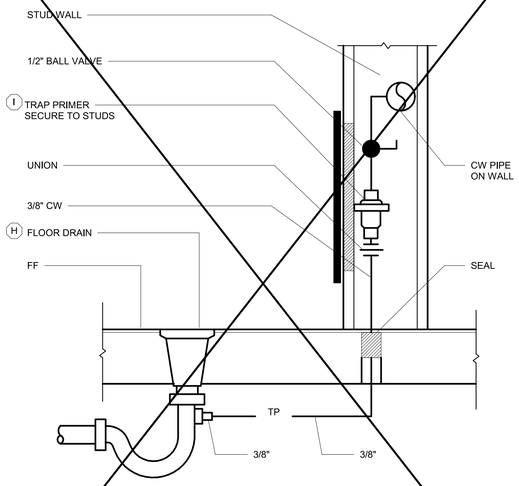

6 *1/2" = 1'-0"*
TRAP PRIMER TO FLOOR DRAIN

IDENTIFICATION STAMP
DIV. OF THE STATE ARCHITECT
APP: 01-119031 INC:
REVIEWED FOR
SS ☑ FLS ☑ ACS ☑
DATE: 10/22/2020

PROFESSIONAL STAMP

REGISTERED PROFESSIONAL ENGINEER
MANNY D. FRANCO
No. 24380
STRUCTURAL
STATE OF CALIFORNIA

12/19/2017

THE PLANS, IDEAS & DESIGNS SHOWN ON THESE DRAWINGS ARE THE PROPERTY OF R&S TAVARES ASSOCIATES, INC. DEVISED SOLELY FOR THIS CONTRACT. THESE PLANS SHALL NOT BE USED, IN WHOLE OR IN PART, FOR ANY PURPOSE FOR WHICH THEY WERE NOT INTENDED WITHOUT THE EXPRESS WRITTEN CONSENT OF R&S TAVARES ASSOCIATES, INC. ©

CLIENT

CLASS LEASING LLC
1221 Harley Knox Boulevard
Perris, CA 92571

ORIGINAL PC STATE AGENCY APPROVAL
FILE NUMBER: PC-128
IDENTIFICATION STAMP
DIVISION OF THE STATE ARCHITECT
04 - 116504 INCR: 0
AC RM FLS EA SSR KER
DATE 07/19/2018

PROJECT TITLE
24' x 40'
EXPANDABLE TO
120' x 40'

PRE-CHECK (PC) DOCUMENT
Code: [2016] CBC
A separate project application for construction is required.

PROJECT SPECIFIC STATE AGENCY APPROVAL

Revision Schedule

#	Description	Date

SHEET TITLE
TYPICAL
PLUMBING
DETAILS

PROJECT NUMBER
17016A

DRAWN BY
rMc/SC

CHECKED BY
JA/RT

DATE
2017/06/05

SHEET NO.
P1.0

SHEET OF SHEETS

1/4/2018 2:44:41 PM C:\Users\Lee\Documents\17016 - Aries, 24x40 PC - MainFile - Low Seismic_Lee.rvt

STRUCTRUAL STEEL:

A. ALL WORK, UNLESS MODIFIED BY THE CONCTRACT DOCUMENTS, SHALL BE PERFORMED IN ACCORDANCE WITH CURRENT AISC SPECIFICATIONS AND STANDARDS.

B. STEEL SHAPES SHALL COMFORM TO THE FOLLOWING STANDARD:
   - a. STRUCTURAL HSS COLUMNS: ASTM A500 GRADE B
   - b. STRUCTURAL W-SHAPES: ASTM A992 GRADE 50
   - c. TUBE STEEL: ASTM A500 GRADE B
   - d. ALL OTHER: ASTM A36

C. FABRICATION, ERECTION, AND SHOP PAINTING SHALL BE IN ACCORDANCE WITH THE PROVISIONS OF THE AISC *CODE OF STANDARD PRACTICE FOR STEEL BUILDING AND BRIDGES*.

D. HOLES IN STRUCTURAL STEEL SHALL NOT BE PERMITTED, UNLESS SPECIFIED IN THE STRUCTURAL DRAWINGS

CONCRETE

A. ALL CONCRETE WORK, UNLESS MODIFIED BY CONTRACT DOCUMENTS, SHALL BE PERFORMED IN ACCORDANCE WITH CHAPTER 19A, CBC 2013 AND ACI 318-11.

B. TESTS AND INSPECTION SHALL BE PERFORMED BY A TESTING LABORATRY CONTRACTED BY THE DISTRICT.

C. MIX DESIGN SHALL BE SUBMITTED FOR QUALIFICATION AND PROVIDE A 28-DAY COMPRESSIVE STRENGTH F'C OF 3500 PSI, COMPOSED OF NORMAL WEIGHT TYPE I PORTALAND CEMENT IN CONFORMANCE WITH ASTM C150.

D. FORMWORK SHALL RESULT IN FINAL STRUCTURE THAT CONFORMS TO SHAPES, LINES, AND DIMENSIONS AS REQUIRED BY THE CONTRACT DOCUMENTS.

E. LOCATIONS OF VENTS AND OPENINGS FOR MECHANICAL AND ELECTRICAL USE SHALL BE VERIFIED BY ARCHITECT.

F. EMBEDMENT OF MATERIALS NOT HARMFULL TO CONCRETE AND WITHIN LIMITATIONS OF SECTION 6.3, ACI-318-11 SHALL BE PERMITTED. REFER TO OTHER DISCIPLINES FOR LOCATION OF CONDUIT, PIPES, FITTINGS, SLEEVES, ETC.

G. CONTINUOUS BATCH PLANT INSPECTION WAIVED PER CBC 1705A3.3. WHEN CONTINUOUS BATCH PLANT INSPECTION IS WAIVED, THE FOLLOWING PERIODIC INSPECTION SHALL BE REQUIRED:(INSPECTIONS PROVIDED BY DISTRICT)
   1. QUALIFIED TECHNICIAN OF THE TESTING LABORATORY SHALL CHECK THE FIRST BATCH AT THE START OF THE DAY.
   2. LICENSED WEIGHMASTER TO POSITIVELY IDENTIFY MATERIALS AS TO QUANTIFY AND CERTIFY TO EACH LOAD BY A BATCH TICKET.
   3. BATCH TICKETS, INCLUDING MATERIAL QUANTITIES AND WEIGHTS SHALL ACCOMPANY THE LOAD, SHALL BE TRANSMITTED TO THE INSPECTOR OF RECORD BY A TRUCK DRIVER WITH THE LOAD IDENTIFIED THEREON. THE LOAD SHALL NOT BE PLACED WITHOUT A BATCH TICKET IDENTIFYING THE MIX. THE INSPECTOR WILL KEEP A DAILY RECORD OF PLACEMENTS, IDENTIFYING EACH TRUCK, ITS LOAD, AND TIME OF RECEIPT, AND APPROXIMATE LOCATION OF DEPOSIT IN THE STRUCTURE AND WILL TRANSMIT A COPY OF THE DAILY RECORD TO THE ENFORCEMENT AGENCY.

H. ANCHOR BOLTS, AND REINFORCING STEEL SHALL BE SECURELY TIED BEFORE CONCRETE IS POURED.

STEEL REINFORCEMENT

A. DEFORMED BARS SHALL CONFORM TO ASTM A615.

B. fy= 40,000 PSI, FOR ALL BARS EXEPT FOR #3 BARS, fy= 60,000 PSI.

C. PROVIDE A MINIMUM CONCRETE COVER FOR REINFORCEMENT EMBEDDED IN:
   - a. CONCRETE CAST AGAINST AND PERMANENTLY EXPOSED TO EARTH = 3"
   - b. CONCRETE EXPOSED TO EARTH OR WEATHER FOR #5 BARS OR SMALLER = 1.5"

D. SPLICE LENGTHS SHALL BE A MINIMUM OF 48" FOR #5 BARS, AND 30" FOR #4 BARS UNLESS OTHERWISE SPECIFIED IN DRAWINGS.

BOLTS

A. ALL BOLTS AND ANCHOR BOLTS SHALL COMFORM ATO ASTM A-307

B. BOLTS EXPOSED TO THE ELEMENTS SHALL BE GALVANIZED BY THE HOT-DIP OR MECHANICAL PROCESS

WELDING

A. ALL WELDING SAHLL BE IN COMFORMANCE TO:
   - a. AWS D1.1, EXCEPT AS MODIFIED IN SECTION J2, AISC-360 FOR STEEL
   - b. AWS D1.3 FOR LIGHT GAUGE STEEL
   - c. AWS D1.4 FOR REINFORCING STEEL

B. ELECTRODE CLASSIFICATION:
   - a. E70XX FOR STEEL AND CONCRETE STEEL REINFORCEMENT
   - b. E60XX FOR LIGHT GAUGE STEEL

C. WELDS SHALL BE CAPABLE OF PRODUCING THE FOLLOWING V-NOTCH TOUGHNESS AS DETERMINED BY APPROPRIATE AWS A5 CLASSIFICATION TEST METHOD OR MANUFACTURER CERTIFICATION:
   - a. LATERAL FORCE RESISTING SYSTEM (LFRS) = 20 FT-LB AT 0 DEGREE F
   - b. COMPLETE JOINT PENETRATION GROOVE WELD = 20 FT-LB AT 40 DEGREE F

D. SHOP AND FIELD WELDING SHALL BE PERFORMED BY AWS CERTIFIED WELDERS.

E. INSPECTION:
   - a. PERIODIC INSPECTION OF FILLET WELDS LESS THAN OR EQUAL TO 5/16”, FLOOR AND ROOF DECK WELDS.
   - b. CONTINUOUS INSPECTION FOR OTHER WELDS.

F. NONDESTRUCTIVE TESTING (NDT):
   - a. ULTRASONIC TESTING SHALL BE PERFORMED ON 100 PERCENT OF CJP GROOVE WELDS IN MATERIALS 5/16” OR THICK OR GREATER. ULTRASONIC TESTING NOT REQUIRED FOR MATERIALS LESS THAN 5/16” THICK. TESTING FREQUENCY MAY BE REDUCED TO 25%, PROVIDED PROVISIONS SET FORTH IN SECTION N5.5e, AISC-360 IS MET.
   - b. MAGNETIC PARTICLE TESTING SHALL BE PERFORMED ON 25 PERCENT OF ALL BEAM-TO-COLUMN CJP GROOVE WELDS. TESTING FREQUENCY MAY BE REDUCED TO 10%, PROVIDED PROVISIONS SET FORTH IN J6.2g, AISC-341 IS MET.

FOUNDATIONS

GEOTECHNICAL INVESTIGATION SHALL BE CONDUCTED IN ACCORDANCE WITH SECTION 1803A.1 THROUGH 1803A.8 BY A GEOTECHNICAL ENGINEER CONTRACTED BY THE DISTRICT. ALLOWABLE FOUNDATION AND LATERAL SOIL PRESSURE VALUES MAY BE DETERMINED FROM TALBLE 1806A.2, WHERE GEOTECHNINCAL REPORTS IS NOT REQUIRED PER SECTION 1803A.2. A MAXIMUM ALLOWABLE SOIL PRESSURE OF 1000 PSF AND 1500 PSF SHALLBE PERMITTED FOR TEMPORARY WOOD AND PERMANENT CONCRETE FOUNDATIONS RESPECTIVELY IN ACCORDANCE WITH SECTION 4.6, IR 16-1.13

A PREVIIOUS REPORT FOR A SPECIFIC SITE MAY BE RESUBMITTED. THE ALLOWABLE FOUNDATIONA AND LATERAL SOIL PRESSURE VALUES ARE ALLOWED A 33% INCREASE FOR SHORT TERM WIND AND SEIMIC LOADS.

THE DISTRCT SHALL BE RESPONSIBLE FOR EXCAVATION, BACKFILL, SETTING ELEVATIONS, CRANING AND RIGGING. PROVIDE SHIMS TO LEVEL BUILDING WITHIN 1/2" TOLERANCE.

COLD-FORMED STEEL:

A. ALL WORK SHALL, UNLESS MODIFIED BY THE CONCTRACT DOCUMENTS, SHALL BE PERFORMED IN ACCORDANCE WITH CURRENT AISI SPECIFICATIONS AND STANDARDS.

B. MATERIAL SPECIFICATION:
   - a. ASTM A-1011/A, GRADE 33 FOR MATERIALS THICKNESS 0.120 OR LESS UNLESS OTHERWISE NOTED
   - b ASTM A-1003, GRADE 33 TYPE H FOR LIGHT GUAGE STUDS AND TRACKS
   - c. SHAPES SHALL BE DIMENSIONED TO SSMA SPECIFICATIONS.

C. SCREWS EXPOSED TO THE ELEMENTS SHALL BE GALVANIZED

STEEL DECK

MINIMUM THICKNESS PERMITTED FOR FLOOR STEEL DECKS IS 20GA. PER DSA IR 16-1.13, 1.2.1, MINIMUM THICKNESS OF NON-STRUCTURAL STEEL ROOF DECKING IS 26GA. STANDING SEAM ROOF PANELS ARE GRADE 40 SHEET STEEL WITH AN ALUMINUM ZINC COATING CONFORMING TO ASTM A792 AND AZ55.

CHANGES

CHANGES AFFECTING STRUCTURAL PORTION OF THE APPROVED PC SHALL NEED DSA APPROVAL AND SHALL BE CLASSIFIED AS CCD CATEFORY A.

12" = 1'-0"
STRUCTURAL NOTES

WOOD

ALL FRAMING LUMBER SHALL BE GRADE MARKED BY AN APPROVED GRADING AGENCY

SHEATHING:

EACH SHEET SHALL BE GRADE MARKED BY THE AMERICAN PLYWOOD ASSOCIATION IN ACCORDANCE WITH THE PROCEDURES AND QUALIFICATIONS SET FORTH BY PS 1-07.

1. SUB FLOOR: 1 1/8" T&G UNBLOCKED PLYWOOD, SHALL PROVIDE A SMOOTH AND UNIFORM SURFACE CAPABLE OF ACCEPTING CARPET FINISH
2. PLYWOOD ROOF DECK OPTION: APA RATED 3/4" T&G OSB OR EQUIVALENT RATED SHEATHING
3. EXTERIOR WALL SIDING:
   - I. STANDARD: 5/8" DURATEMP OR 5/8" SMART PANEL
   - II. OPTION: 5/8" MOD
   - III. OPTION: 1/2" OSB OR CDX PLYWOOD FOR PLASTER/STUCCO FINISH
   - IV. OPTION: 1/2" OSB OR CDX PLYWOOD FOR HARDIE BOARD (LAP SIDING) FINISH
4. EXTERIOR WALL SIDING ATTACHMENT:

   FASTENERS USED FOR THE ATTACHMENT OF EXTERIOR WALL COVERINGS SHALL BE HOT-DIPPED GALVANIZED, MECHANICALLY DEPOSITED ZINC-COATED, STAINLESS, SILICON BRONZE OR COPPER PER CBC SECTION 2304.9.1.1

   FASTEN TO WOOD FRAMING WITH 8D BOX NAILS @ 6" E.N., 12" F.N.
   FASTEN TO LIGHT GAGE METAL FRAMING WITH #8 WAFER HEAD STSMS @ 6" E.N., 12" F.N.
   FASTEN TO STRUCTURAL STEEL WITH #12 STSMS OR 0.145 DIAM SHOT PINS @ 12" O.C.

TREATED WOOD:

ALL WOOD LOCATED WITHIN 6" OF EXPOSED EARTH SHALL BE "PRESERVATIVE TREATED" OR SHALL BE "NATURALLY DURABLE" MATERIAL IN ACCORDANCE WITH CBC SECTION 2304.11.2.2.
1. ALL ROUGH LUMBER SHALL BE DF #2 OR BETTER.
2. ALL POWER DRIVEN FASTENERS SHALL BE HILTI FASTENERS ICC# ESR-1663, AND RAMSET POWER DRIVEN FASTENERS (ICC # ESR-1799), OR SIMPSON POWER DRIVEN FASTENERS ICC #ESR-2138, OR OTHER EQUIVALENT PRODUCTS WITH ICC REPORTS AND APPROVED BY DSA.
3. FASTENERS, INCLUDING NUTS AND WASHERS, IN CONTACT WITH PRESERVATIVE-TREATED WOOD SHALL BE OF HOT-DIPPED ZINC-COATED GALVANIZED STEEL, STAINLESS STEEL, SILICON BRONZE OR COPPER PER CBC 2304.9.5.1

ROOF DIAPHRAGM:

3/4" T&G RATED SHEATHING, EXPOSURE 1, 48/24 SPAN RATING
FASTEN AT METAL SUPPORTS W/ #10 x 1 1/4" SELF-TAPPING PHILLIPS FLAT-HEAD ZINC COATED TEKS SCREWS @ 4" O.C. BN, 6" O.C. EN, AND 12" O.C. FN. PROVIDE A MINIMUM OF 3/8" EDGE DISTANCE FOR FASTENERS TO PLYWOOD EDGE PER CBC SECTION 2306.2.

FLOOR DIAPHRAGM:

1 1/8" PLYWOOD - STURD-I-FLOOR T&G RATED SHEATHING, EXTERIOR, 48" oc SPAN RATING
FASTEN AT METAL SUPPORTS W/ #10 - 24 x 1 3/4" SELF-TAPPING PHILLIPS FLAT-HEAD ZINC COATED TEKS @ 6" O.C. BN, 6" O.C. EN, 12" FN. PROVIDE A MINIMUM OF 3/8" EDGE DISTANCE FOR FASTENERS TO PLYWOOD EDGE PER CBC SECTION 2306.2

CONCRETE FLOOR DATA: LIGHTWEIGHT CONCRETE FLOOR
STRENGTH: 3500 PSI
TYPE: I OR II
DESINTY: 110 PCF - MAX

DIMENSION LUMBER ATTACHMENT TO STEEL FRAMING:

2 x STUDS AT CORNER STEEL COLUMNS (NAILING STUD)
USE: #10 - 24 x 2 1/2" LG. SELF-DRILLING SELF-TAPPING PHILLIPS FLAT-HEAD WITH WASHER ZINC COATED TEK SCREWS AT 24" OC.

NAILING NOTES:

1. ALL NAILS SHALL BE COMMON UNLESS OTHERWISE NOTED
2. MACHINE APPLIED 16d FASTENERS SHALL HAVE AN EMBEDMENT OF NOT LESS THAN 1 1/2" INTO THE SECOND MEMBER, AND SHALL NOT BE LESS THAN 3" IN OVERALL LENGTH.
3. NAILS SHALL BE ACCEPTABLE FOR HAND NAILING, PROVIDED THE REQUIREMENT EMBEDMENT IS MAINTAINED.

CONNECTIONS AND FASTENERS:

ALL CONNECTIONS AND FASTENERS IN DRAWINGS CAN BE SUBSTITUTED BY AN EQUIVALENT PRODUCT PROVIDING ICC REPORTS ARE SUBMITTED TO AND APPROVED BY DSA.

CONNECTIONS LAG SCREWS:

LAG SCREWS SHALL BE INSTALLED WITH WASHER AND TURNED BY WRENCH, OVER-TORQUING SHALL BE AVOIDED. A PRE-DRILLED CLEARANCE AND LEAD HOLE SHALL BE REQUIRED AS DESCRIBED BELOW:

a) THE CLEARANCE HOLE FOR THE UNTHREADED PORTION OR THE SHANK SHALL HAVE SAME DEPTH AND DIAMETER.

b) THE LEAD HOLE FOR THE THREADED PORTION OF THE SHANK SHALL HAVE SAME DEPTH AND
65% TO 85% OF SHANK DIAMETER FOR LUMBER WITH SPECIFC GRAVITY OF, $G > 0.6$
60% TO 75% OF SHANK DIAMETER FOR LUMBER WITH SPECIFC GRAVITY OF, $0.5 < G \leq 0.6$
40% TO 70% OF SHANK DIAMETER FOR LUMBER WITH SPECIFC GRAVITY OF, $G \leq 0.5$

LEAD OR CLEARANCE HOLES SHALL NOT BE REQUIRED FOR 3/8” DIAMETER OR SMALLER LAG SCREWS.

BALLISTIC PINS OPTIONS

1. HILTI X-CR PIN WITH 0.145 SHANK DIAMTER, ICC ESR-1663
2. RAMP SET 1500 PIN WITH 0.145 SHANK DIAMETER, ICC ESR-1799
3. SIMPSON STRONG TIE PDP PIN WITH 0.145 SHANK DIAMETER, ICC ESR-2138

NAILING SCHEDULE: (ALL NAILS SHALL BE COMMON, GALVANIZED WHERE EXPOSED) PER C.B.C. TABLE 2304.9.1

	CONNECTION	FASTENING	LOCATION
1.	JOIST TO SILL OR GIRDER	3-8d	TOENAIL
2.	BRIDGING TO JOIST	2-8d	TOENAIL EA. END
3.	1X6 OR LESS SUBFLOOR TO EA. JOIST	2-8d	FACE NAIL
4.	WIDER THAN 1X6 SUBFLOOR TO EA. JOIST	3-8d	FACE NAIL
5.	2" SUBFLOOR TO JOIST	2-16d	BLIND & FACE NAIL
6.	SOLE PLT. TO JOIST OR BLK'G. TO EA. JOIST	16d@16"	TYP. FACE NAIL
	SOLE PLT. TO JOIST OR BLK'G. @ BRACED WALL PANEL	3-16d@16"	TYP. FACE NAIL
7.	TOP PLT. TO STUD	2-16d	END NAIL
8.	STUD TO SOLE PLT.	2-16d	END NAIL
	OR	4-8d	TOENAIL
9.	DOUBLE STUDS	16d@24"	END NAIL
10.	DOUBLE TOP PLT.	16d@16"	TYP. FACE NAIL
	DOUBLE TOP PLT.	8-16d MIN. U.N.O.	LAP SPLICE
11.	BLKG. BTW. JOIST OR RAFTERS TO TOP PLT.	3-8d	TOENAIL
12.	RIM JOIST TO TOP PLT.	8d@6"	TOENAIL
13.	TOP PLT., LAPS & INTERSECTIONS	2-16d	FACE NAIL
14.	CONT. HDR. 2 PIECES	16d@16"	ALONG EDGE
15.	CLG. JOIST TO PLT.	3-8d	TOENAIL
16.	CONT. HDR. TO STUD	4-8d	TOENAIL
17.	CLG. JOIST LAP OVER PARTITONS	3-16d	FACE NAIL
18.	CLG. JOIST PARALLEL TO RAFTERS	3-16d	FACE NAIL
19.	RAFTER TO PLT.	3-8d	TOENAIL
20.	1" DIA. BRACE TO EA. STUD & PLT.	2-8d	FACE NAIL
21.	1X8 SHT'G. TO EA. BRG.	3-8d	FACE NAIL
22.	WIDER THAN 1X8 SHT'G. TO BRG.	3-8d	FACE NAIL
23.	BUILT-UP CORNER STUDS	16d@24"	FACE NAIL
24.	BUILT-UP GIRDERS & BEAMS	20d@32"	FACE NAIL @ TOP & BTM. STAGR. ON OPP. SIDES
		2-20d	FACE NAIL @ ENDS & @ EA. SPLICE
25.	2" PLANKS	2-16d	@ EA. BRG.
26.	COLLAR TIE TO RAFTER	3-10d	FACE NAIL
27.	JACK RAFTER TO HIP	3-10d	TOENAIL
28.	ROOF RAFTER TO 2X RIDGE	2-16d	TOENAIL
		2-16d	FACE NAIL
29.	JOIST TO BAND JOIST	3-16d	FACE NAIL
30.	4X BLOCKING TO STUDS	1-A34	FACE NAIL

IDENTIFICATION STAMP
DIV. OF THE STATE ARCHITECT
APP: 01-119031 INC:
REVIEWED FOR
SS ☑ FLS ☑ ACS ☑
DATE: 10/22/2020

PROFESSIONAL STAMP

REGISTERED PROFESSIONAL ENGINEER
MANNY D. FR...H
No. S3380
STRUCTURAL
STATE OF CALIFORNIA

12/19/2017

THE PLANS, IDEAS & DESIGNS SHOWN ON THESE DRAWINGS ARE THE PROPERTY OF R&S TAVARES ASSOCIATES, INC. DEVISED SOLELY FOR THIS CONTRACT. THESE PLANS SHALL NOT BE USED, IN WHOLE OR IN PART, FOR ANY PURPOSE FOR WHICH THEY WERE NOT INTENDED WITHOUT THE EXPRESS WRITTEN CONSENT OF R&S TAVARES ASSOCIATES, INC. ©

CLIENT

CLASS LEASING LLC
1221 Harley Knox Boulevard
Perris, CA 92571

ORIGINAL PC STATE AGENCY APPROVAL

FILE NUMBER: PC-128
IDENTIFICATION STAMP
DIVISION OF THE STATE ARCHITECT
04 - 116504 INCR: 0
AC RM FLS EA SSR KER
DATE 07/19/2018

PROJECT TITLE

24' x 40'
EXPANDABLE TO
120' x 40'

PRE-CHECK (PC) DOCUMENT
Code: [2016] CBC
A separate project application for construction is required.

PROJECT SPECIFIC STATE AGENCY APPROVAL

Revision Schedule

#	Description	Date

SHEET TITLE
STRUCTURAL GEN NOTES

PROJECT NUMBER
17016A

DRAWN BY
rMc/SC

CHECKED BY
JA/RT

DATE
2017/06/05

SHEET NO.
S0.1

SHEET OF SHEETS

C:\Users\Lee\Documents\17016 - Aries, 24x40 PC - MainFile - Low Seismic_Lee.rvt
12/18/2017 6:01:37 PM

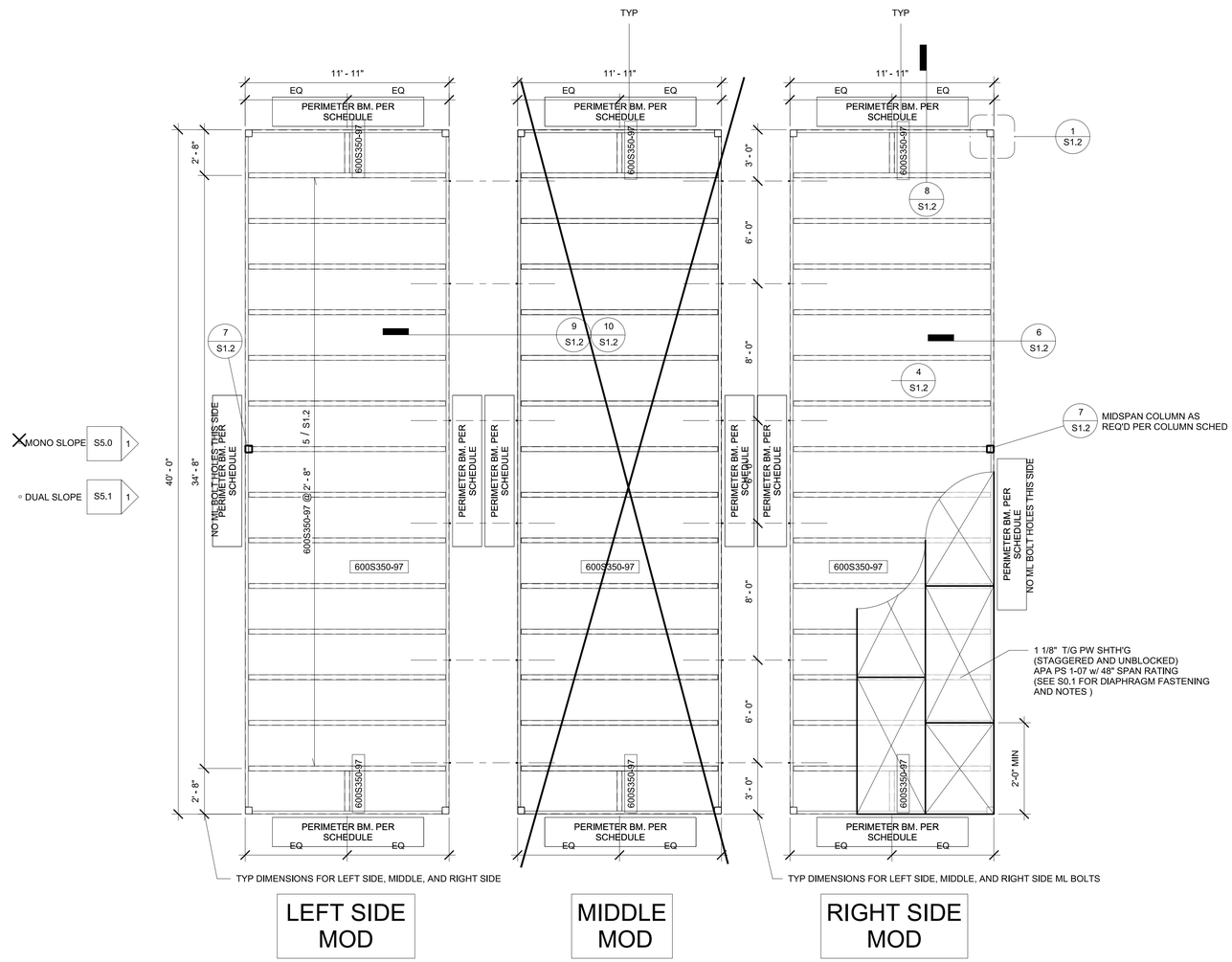

Perimeter Floor Beam Schedule			
HT	No Plaster Walls	~~Plaster Walls~~	~~w/ Parapet, 18" max~~
☒ 9'	C8x11.5	~~C8x11.5~~	~~C8x11.5~~
☐ 10'	C8x11.5	~~C8x11.5~~	~~C8x11.5~~

NOTE: SPLICE AT FLOOR BEAM PERMITTED PER 3/S1.2

Column Schedule			
HT	No Plaster Walls	~~Plaster Walls~~	~~w/ Parapet, 18" max~~
☒ 9'	5x5X1/4	5x5X1/4	~~5x5X1/4~~
☐ 10'	5x5X1/4	~~5x5X5/16*~~	~~5x5X5/16*~~
			~~3x3X3/16 mid-span column~~

*Alternative 6x6x1/4

1 *1/4" = 1'-0"*
WD Shth'g Flr Framing Plan (50+15 PSF)

1/4/2018 2:44:47 PM C:\Users\Lee\Documents\17016 - Aries, 24x40 PC - MainFile - Low Seismic_Lee.rvt

IDENTIFICATION STAMP
DIV. OF THE STATE ARCHITECT
APP: 01-119031 INC:
REVIEWED FOR
SS ☑ FLS ☑ ACS ☑
DATE: 10/22/2020

PROFESSIONAL STAMP
REGISTERED PROFESSIONAL ENGINEER MANNY D. FRANCO C-24380 STRUCTURAL STATE OF CALIFORNIA
12/19/2017

THE PLANS, IDEAS & DESIGNS SHOWN ON THESE DRAWINGS ARE THE PROPERTY OF R&S TAVARES ASSOCIATES, INC. DEVISED SOLELY FOR THIS CONTRACT. THESE PLANS SHALL NOT BE USED, IN WHOLE OR IN PART, FOR ANY PURPOSE FOR WHICH THEY WERE NOT INTENDED WITHOUT THE EXPRESS WRITTEN CONSENT OF R&S TAVARES ASSOCIATES, INC. ©

CLIENT
CLASS LEASING LLC
1221 Harley Knox Boulevard
Perris, CA 92571

ORIGINAL PC STATE AGENCY APPROVAL
FILE NUMBER: PC-128
IDENTIFICATION STAMP
DIVISION OF THE STATE ARCHITECT
04 - 116504 INCR: 0
AC RM FLS EA SSR KER
DATE 07/19/2018

PROJECT TITLE
24' x 40'
EXPANDABLE TO
120' x 40'

PRE-CHECK (PC) DOCUMENT
Code: [2016] CBC
A separate project application for construction is required.

PROJECT SPECIFIC STATE AGENCY APPROVAL

Revision Schedule

#	Description	Date

SHEET TITLE
WD SHTH'G FLR
FRM'G PLAN
(50+15 PSF)

PROJECT NUMBER
17016A

DRAWN BY
rMc/SC

CHECKED BY
JA/RT

DATE
2017/06/05

SHEET NO.
S1.0.1

SHEET OF SHEETS

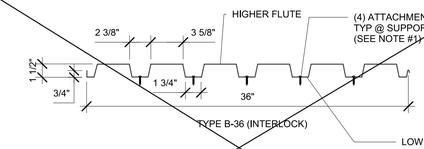

DECK SECTION PROPERTIES
TYPE B

THICKNESS	= 0.036"
POSITIVE	= 0.235 IN²
NEGITIVE	= 0.246 IN³
I	= 0.22 IN⁴

NOTES:

1. TYPICAL ATTACHMENT TO BE #10-16 TEKS/3 OR 1/2" DIAMETER SPOT (PUDDLE) WELDS.

2. PROVIDE #10-16 TEKS/3 @ 12" OC OR 1/2" DIAMETER SPOT (PUDDLE) WELDS AT 12" O.C. AT SUPPORTS PARALLEL WITH FLUTES & @ AT SEAMS

20 *1 1/2" = 1'-0"*
MTL Deck Section Properites

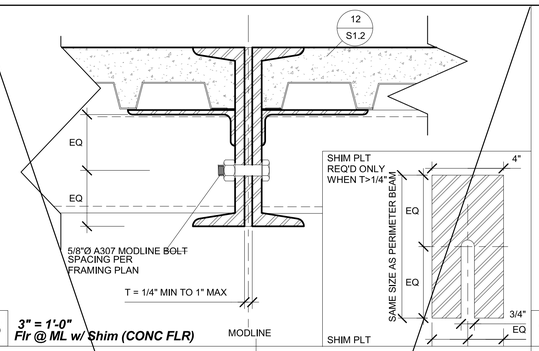

15 *3" = 1'-0"*
Flr @ ML w/ Shim (CONC FLR)

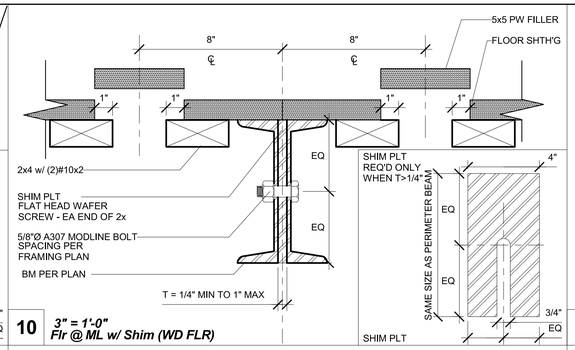

10 *3" = 1'-0"*
Flr @ ML w/ Shim (WD FLR)

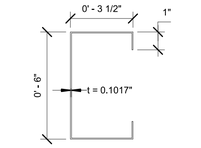

CHANNEL JOIST SECTION PROPERTIES
A-1011, GRADE 33

t	= 0.1017"
S_x	= 2.822 IN³
I_x	= 8.631 IN⁴
F_y	= 33 KSI

5 *3" = 1'-0"*
Channel Joist Section Properties (600S350-97)

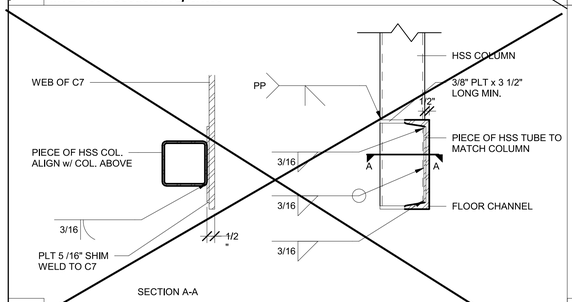

7 *1 1/2" = 1'-0"*
Mid-Span Column Connection

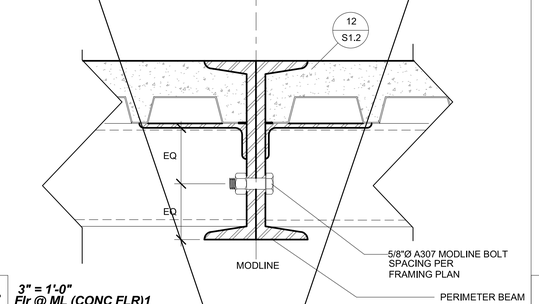

14 *3" = 1'-0"*
Flr @ ML (CONC FLR)1

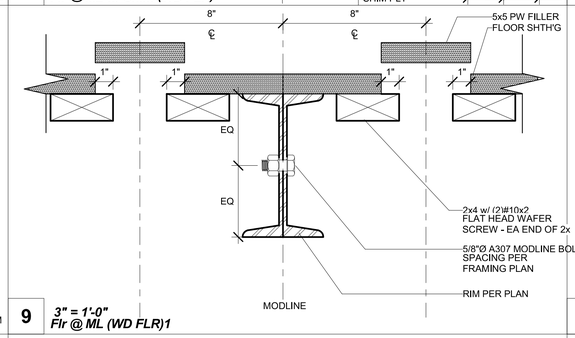

9 *3" = 1'-0"*
Flr @ ML (WD FLR)1

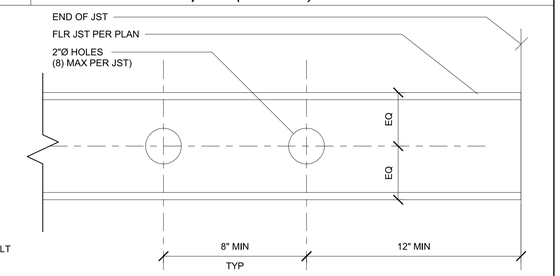

4 *3" = 1'-0"*
Elevation - Allowable Jst Holes

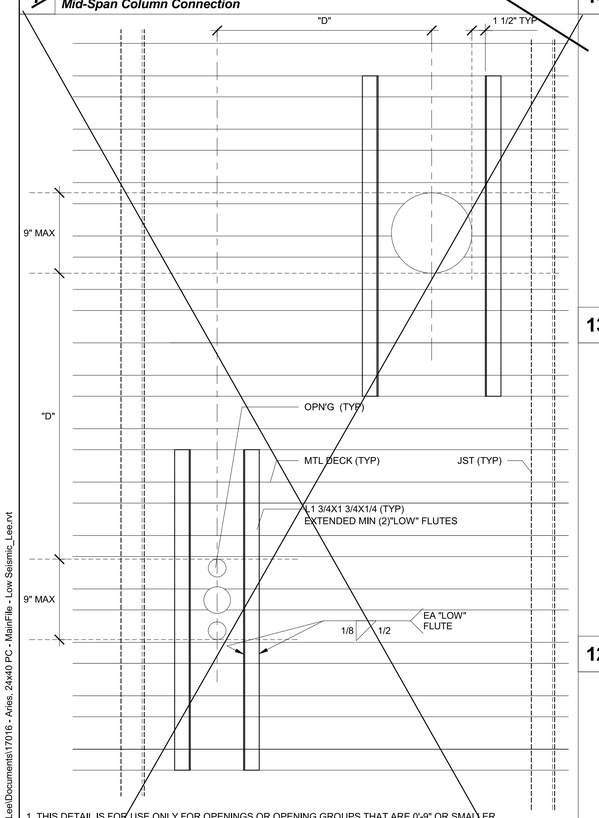

1. THIS DETAIL IS FOR USE ONLY FOR OPENINGS OR OPENING GROUPS THAT ARE 0'-9" OR SMALLER.

2. OPENINGS 2"Ø OR LESS NOT OCCURING IN THE LOWER FLUTE DO NOT REQUIRE REINFORCING AND MAY BE CORED THRU THE CONCRETE.

3. IF "D" IS LESS THAN 32" THEN THE GROUP OF OPENINGS MUST BE BLOCKED OUT WITH ADDITIONAL FRAMING.

4. PRIOR TO CONCRETE POUR, BLOCK OUT THE OPENINGS. AFTER THE CONCRETE HAS BEEN CURED THE DECK MAY BE CUT.

16 *1 1/2" = 1'-0"*
Typ Deck Penetrations (CONC FLR)

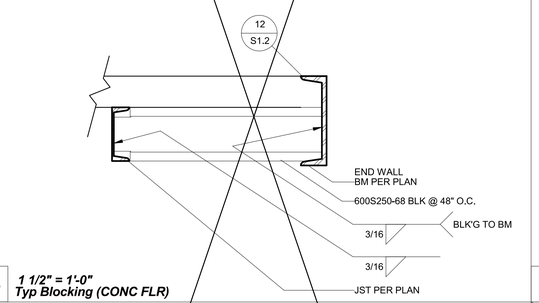

13 *1 1/2" = 1'-0"*
Typ Blocking (CONC FLR)

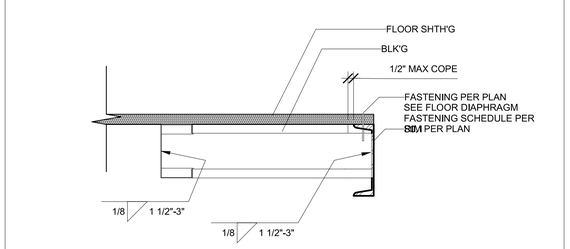

8 *1 1/2" = 1'-0"*
Typ Blk'g Connection @ Rim (WD FLR)

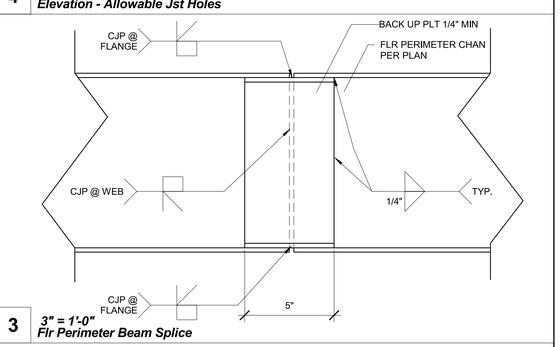

3 *3" = 1'-0"*
Flr Perimeter Beam Splice

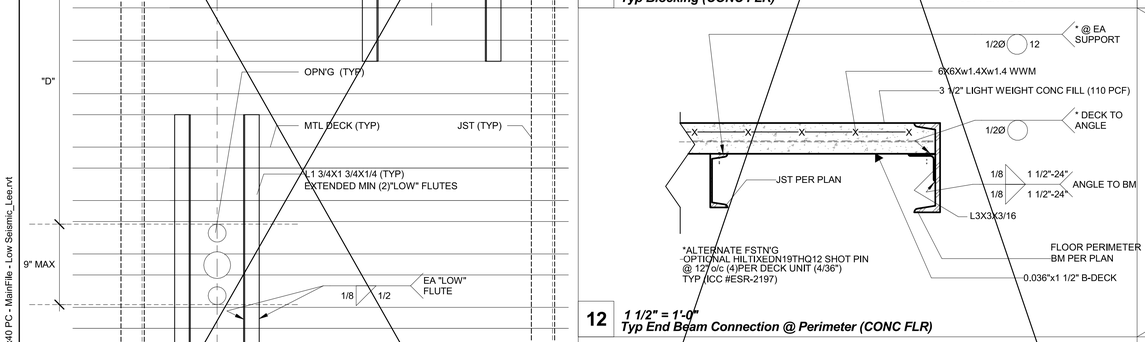

12 *1 1/2" = 1'-0"*
Typ End Beam Connection @ Perimeter (CONC FLR)

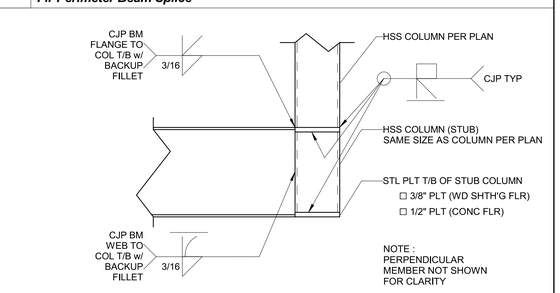

2 *1 1/2" = 1'-0"*
Typ Flr Bm to Column Connection

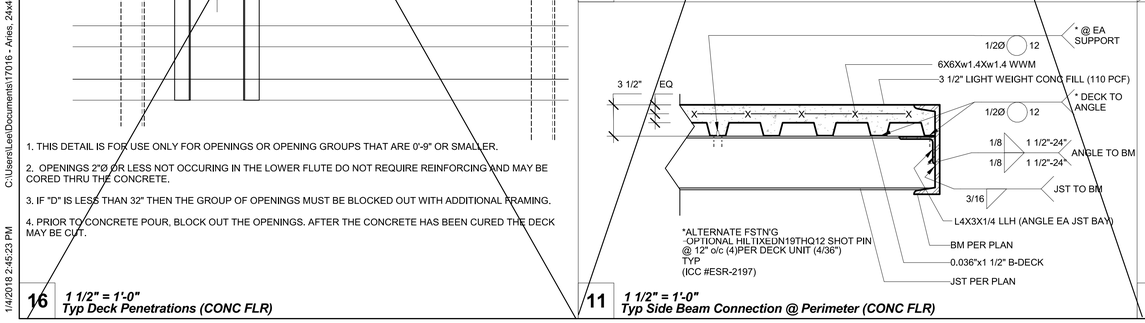

11 *1 1/2" = 1'-0"*
Typ Side Beam Connection @ Perimeter (CONC FLR)

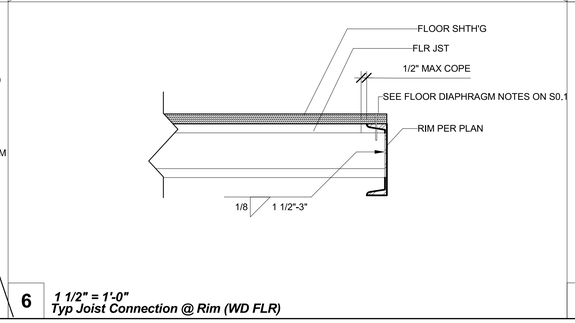

6 *1 1/2" = 1'-0"*
Typ Joist Connection @ Rim (WD FLR)

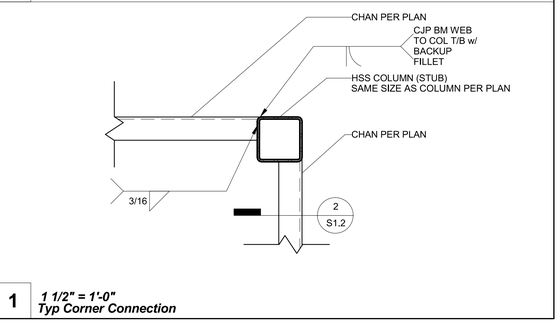

1 *1 1/2" = 1'-0"*
Typ Corner Connection

IDENTIFICATION STAMP
DIV. OF THE STATE ARCHITECT
APP: 01-119031 INC:
REVIEWED FOR
SS ☑ FLS ☑ ACS ☑
DATE: 10/22/2020

PROFESSIONAL STAMP

REGISTERED PROFESSIONAL ENGINEER MANNY D. FRANCO C-43801 STRUCTURAL STATE OF CALIFORNIA

12/19/2017

THE PLANS, IDEAS & DESIGNS SHOWN ON THESE DRAWINGS ARE THE PROPERTY OF R&S TAVARES ASSOCIATES, INC. DEVISED SOLELY FOR THIS CONTRACT. THESE PLANS SHALL NOT BE USED, IN WHOLE OR IN PART, FOR ANY PURPOSE FOR WHICH THEY WERE NOT INTENDED WITHOUT THE EXPRESS WRITTEN CONSENT OF R&S TAVARES ASSOCIATES, INC. ©

CLIENT

CLASS LEASING LLC
1221 Harley Knox Boulevard
Perris, CA 92571

ORIGINAL PC STATE AGENCY APPROVAL
FILE NUMBER: PC-128
IDENTIFICATION STAMP
DIVISION OF THE STATE ARCHITECT
04 - 116504 INCR: 0
AC RM FLS EA SSR KER
DATE 07/19/2018

PROJECT TITLE
24' x 40' EXPANDABLE TO 120' x 40'

PRE-CHECK (PC) DOCUMENT
Code: [2016] **CBC**
A separate project application for construction is required.

PROJECT SPECIFIC STATE AGENCY APPROVAL

Revision Schedule

#	Description	Date

SHEET TITLE
STRUCTURAL DETAILS (FLOOR)

PROJECT NUMBER
17016A

DRAWN BY
rMc/SC

CHECKED BY
JA/RT

DATE
2017/06/05

SHEET NO.
S1.2

SHEET OF SHEETS

C:\Users\Lee\Documents\17016 - Aries, 24x40 PC - MainFile - Low Seismic_Lee.rvt
1/4/2018 2:45:23 PM

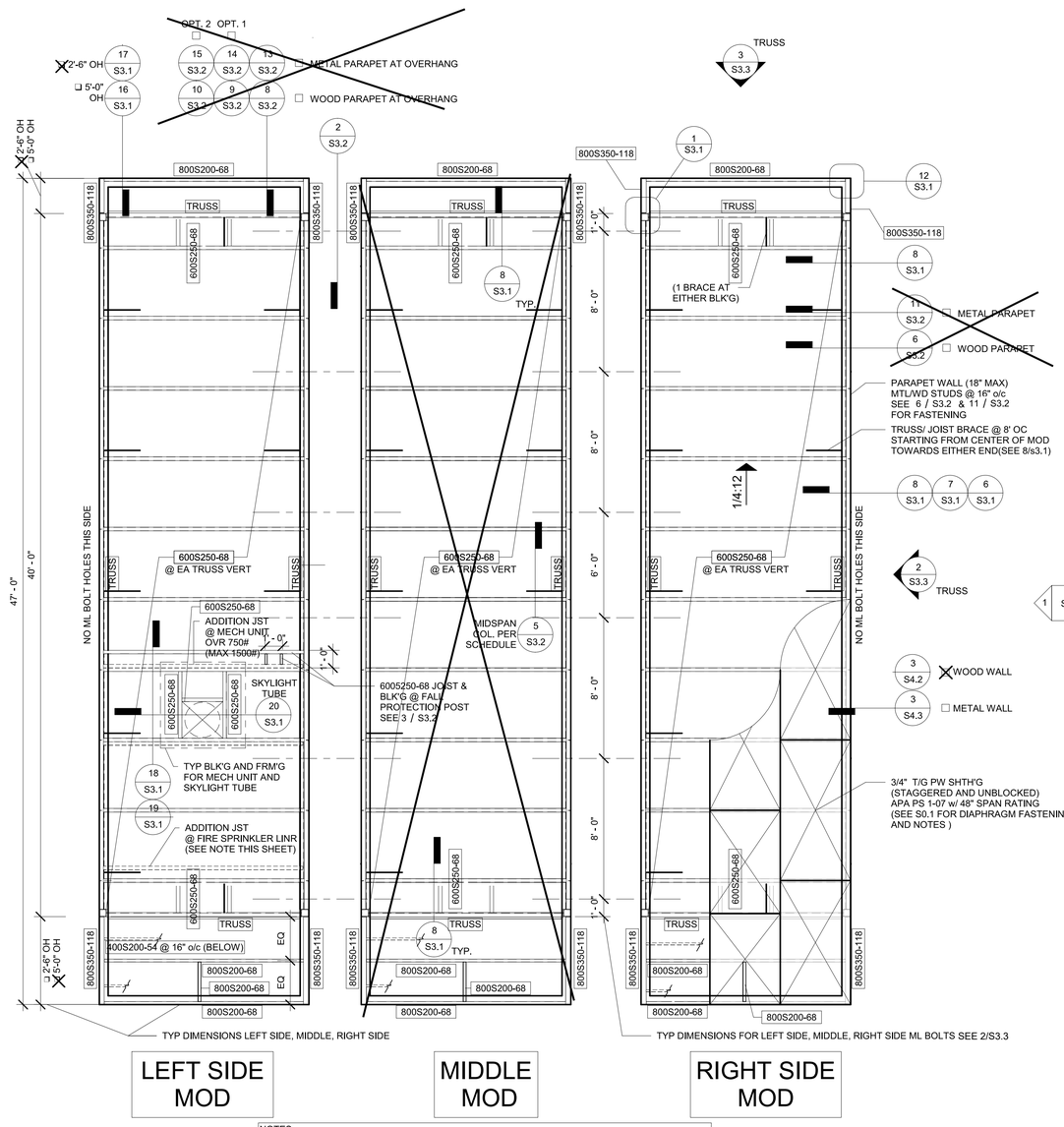

NOTES:

FIRE SPRINKLER
ADDITIONAL ROOF JOIST FOR FIRE SPRINKLER LINE AS REQ'D
LOCATION OF FIRE SPRINKLER AND ADDITIONAL JOIST TO BE DETERMINED

1 *1/4" = 1'-0"*
Mono Roof Framing Plan

IDENTIFICATION STAMP
DIV. OF THE STATE ARCHITECT
APP: 01-119031 INC:
REVIEWED FOR
SS ☑ FLS ☑ ACS ☑
DATE: 10/22/2020

PROFESSIONAL STAMP

REGISTERED PROFESSIONAL ENGINEER
MANNY D. FRIEDLI
No. S3380
STRUCTURAL
STATE OF CALIFORNIA

12/19/2017

THE PLANS, IDEAS & DESIGNS SHOWN ON THESE DRAWINGS ARE THE PROPERTY OF R&S TAVARES ASSOCIATES, INC. DEVISED SOLELY FOR THIS CONTRACT. THESE PLANS SHALL NOT BE USED, IN WHOLE OR IN PART, FOR ANY PURPOSE FOR WHICH THEY WERE NOT INTENDED WITHOUT THE EXPRESS WRITTEN CONSENT OF R&S TAVARES ASSOCIATES, INC. ©

CLIENT

CLASS LEASING LLC
1221 Harley Knox Boulevard
Perris, CA 92571

ORIGINAL PC STATE AGENCY APPROVAL
FILE NUMBER: PC-128
IDENTIFICATION STAMP
DIVISION OF THE STATE ARCHITECT
04 - 116504 INCR: 0
AC RM FLS EA SSR KER
DATE 07/19/2018

PROJECT TITLE
24' x 40'
EXPANDABLE TO
120' x 40'

PRE-CHECK (PC) DOCUMENT
Code: [2016] CBC
A separate project application for construction is required.

PROJECT SPECIFIC STATE AGENCY APPROVAL

Revision Schedule

#	Description	Date

SHEET TITLE
MONO SLOPE
ROOF FRM'G PLAN

PROJECT NUMBER
17016A

DRAWN BY
rMc/SC

CHECKED BY
JA/RT

DATE
2017/06/05

SHEET NO.
S3.0.1

SHEET OF SHEETS

C:\Users\Lee\Documents\17016 - Aries, 24x40 PC - MainFile - Low Seismic_Lee.rvt
1/10/2018 11:44:46 AM

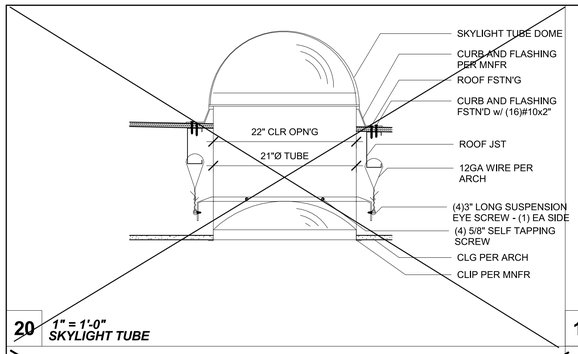

20 *1" = 1'-0"*
SKYLIGHT TUBE

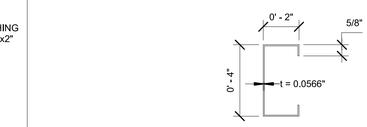

OVERHANG CHANNEL SECTION PROPERTIES
400S200-54
A-1003, GRADE 33, TYPE H
t = 0.0566"
S_x = 0.623 IN^3
I_x = 1.292 IN^4
F_y = 33 KSI

15 *3" = 1'-0"*
Soffit Channel Section Properties

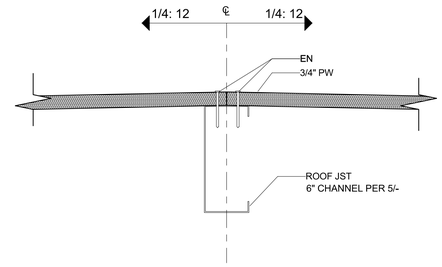

10 *3" = 1'-0"*
Roof @ Ridge

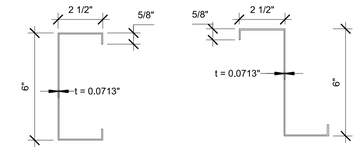

CHANNEL JOIST SECTION PROPERTIES
600S250-68 OR Z6X2.5X5/8-14GA
A-1003, GRADE 33, TYPE H
t = 0.0713"
S_x = 1.508 IN^3
I_x = 4.727 IN^4
F_y = 33 KSI

5 *3" = 1'-0"*
Roof Channel Joist Section Properites

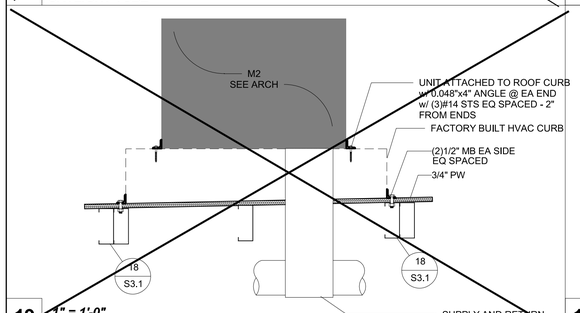

19 *1" = 1'-0"*
HVAC

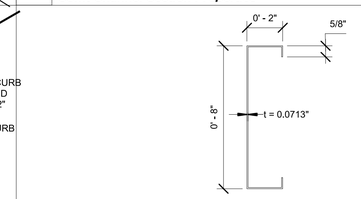

OVERHANG CHANNEL SECTION PROPERTIES
800S200-68
A-1003, GRADE 33, TYPE H
t = 0.0713"
S_x = 2.035 IN^3
I_x = 8.140 IN^4
F_y = 33 KSI

14 *3" = 1'-0"*
Fascia Channel Section Properties

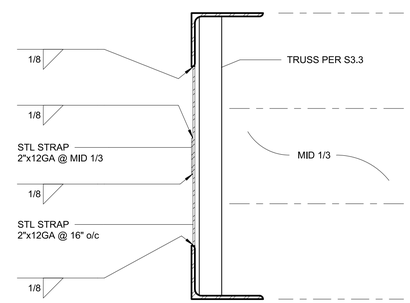

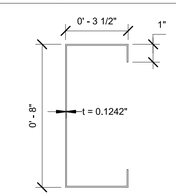

OVERHANG CHANNEL SECTION PROPERTIES
800S350-118
A-1003, GRADE 33, TYPE H
t = 0.1242"
S_x = 5.010 IN^3
I_x = 20.041 IN^4
F_y = 33 KSI

4 *3" = 1'-0"*
Overhang Beam Section Properites

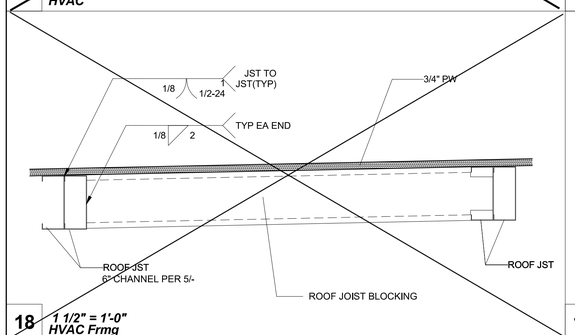

18 *1 1/2" = 1'-0"*
HVAC Frmg

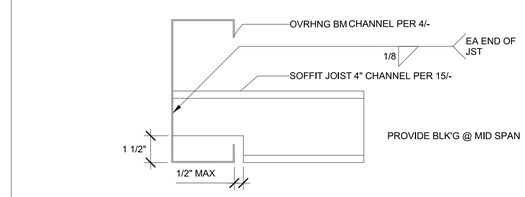

13 *3" = 1'-0"*
Typ Soffit Joist Connection

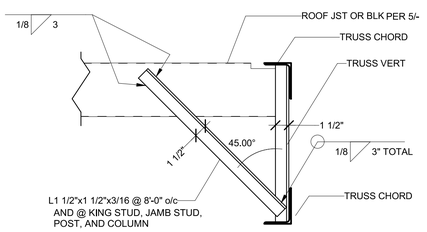

8 *1 1/2" = 1'-0"*
Typ Roof Jst Bracing

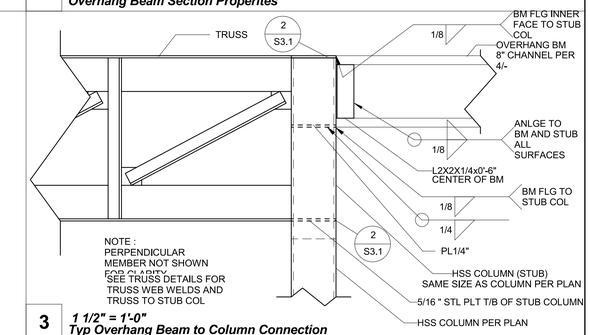

3 *1 1/2" = 1'-0"*
Typ Overhang Beam to Column Connection

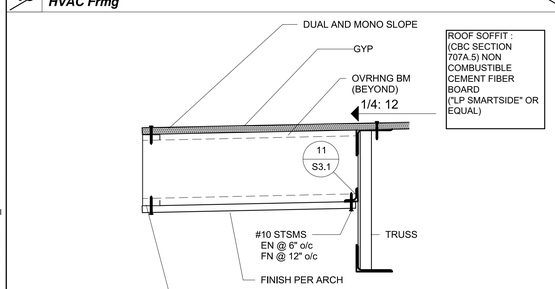

17 *1 1/2" = 1'-0"*
2'-6" Overhang @ Endwall

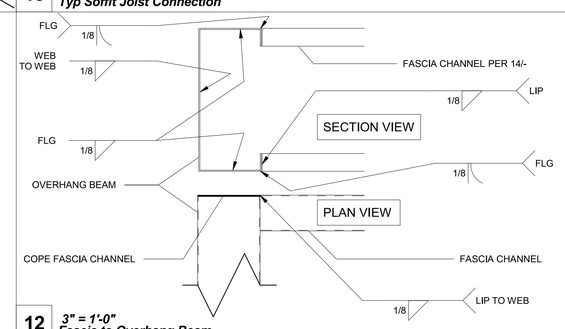

12 *3" = 1'-0"*
Fascia to Overhang Beam

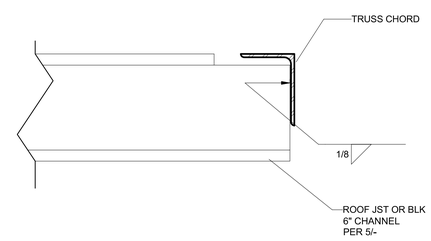

7 *3" = 1'-0"*
Typ Roof Joist Connection @ Truss Chord

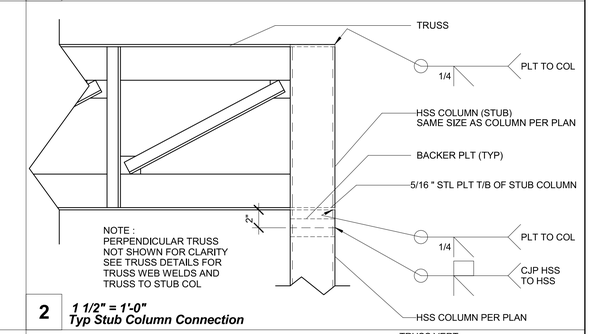

2 *1 1/2" = 1'-0"*
Typ Stub Column Connection

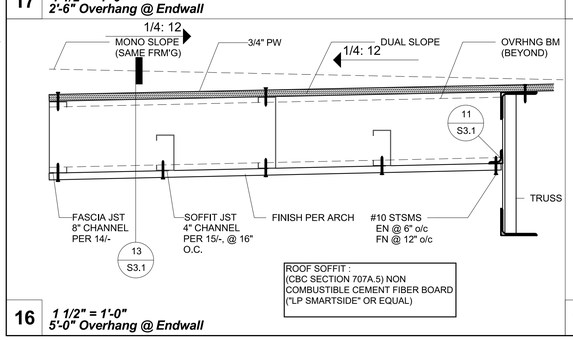

16 *1 1/2" = 1'-0"*
5'-0" Overhang @ Endwall

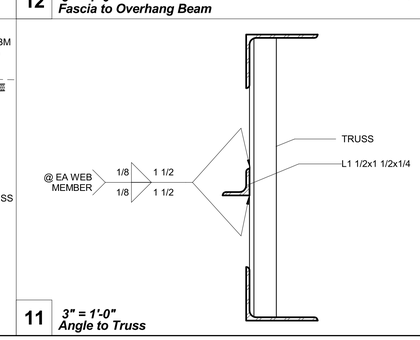

11 *3" = 1'-0"*
Angle to Truss

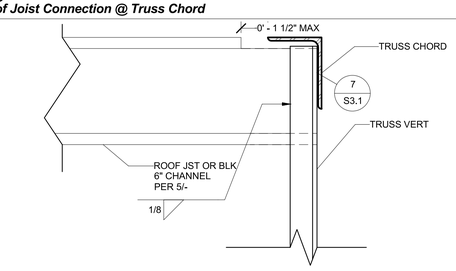

6 *3" = 1'-0"*
Typ Roof Joist Connection @ Truss Vert

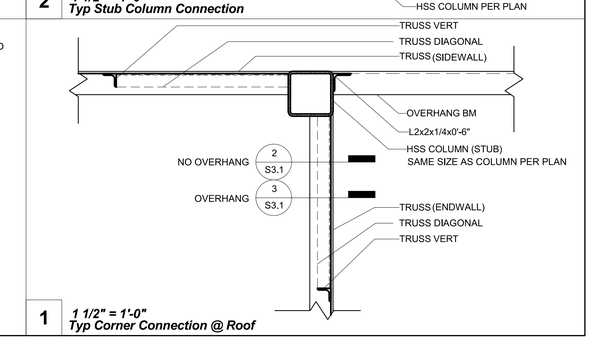

1 *1 1/2" = 1'-0"*
Typ Corner Connection @ Roof

IDENTIFICATION STAMP
DIV. OF THE STATE ARCHITECT
APP: 01-119031 INC:
REVIEWED FOR
SS ☑ FLS ☑ ACS ☑
DATE: 10/22/2020

PROFESSIONAL STAMP

REGISTERED PROFESSIONAL ENGINEER
MANNY D. FRANCISCO
C-24380
STRUCTURAL
STATE OF CALIFORNIA

12/19/2017

THE PLANS, IDEAS & DESIGNS SHOWN ON THESE DRAWINGS ARE THE PROPERTY OF R&S TAVARES ASSOCIATES, INC. DEVISED SOLELY FOR THIS CONTRACT. THESE PLANS SHALL NOT BE USED, IN WHOLE OR IN PART, FOR ANY PURPOSE FOR WHICH THEY WERE NOT INTENDED WITHOUT THE EXPRESS WRITTEN CONSENT OF R&S TAVARES ASSOCIATES, INC. ©

CLIENT

CLASS LEASING LLC
1221 Harley Knox Boulevard
Perris, CA 92571

ORIGINAL PC STATE AGENCY APPROVAL
FILE NUMBER: PC-128

IDENTIFICATION STAMP
DIVISION OF THE STATE ARCHITECT
04 - 116504 INCR: 0
AC RM FLS EA SSR KER
DATE 07/19/2018

PROJECT TITLE
24' x 40'
EXPANDABLE TO
120' x 40'

PRE-CHECK (PC) DOCUMENT
Code: [2016] **CBC**
A separate project application for construction is required.

PROJECT SPECIFIC STATE AGENCY APPROVAL

Revision Schedule

#	Description	Date

SHEET TITLE
STRUCTURAL DETAILS (ROOF)

PROJECT NUMBER
17016A

DRAWN BY
rMc/SC

CHECKED BY
JA/RT

DATE
2017/06/05

SHEET NO.
S3.1

SHEET OF SHEETS

C:\Users\Lee\Documents\17016 - Aries, 24x40 PC - MainFile - Low Seismic_Lee.rvt
1/4/2018 2:45:29 PM

TABLE A-SECTION CENTROID	
SECTION	CENTROID C
L4X3 (LLV)	1 1/4"
L4X3 (LLH)	3/4"
L2X2X3/16	9/16"
L1.5X1.5X3/16	7/16"

12 *1/2" = 1'-0"*
TABLE A - SECTION CENTROID

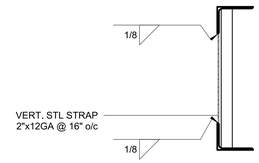

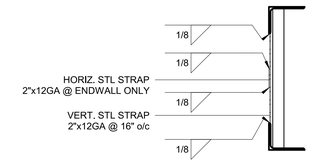

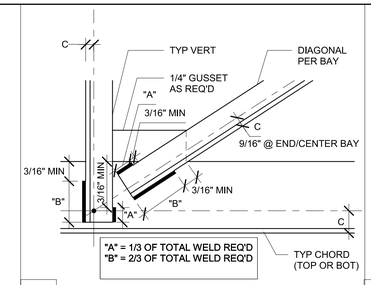

8 *3" = 1'-0"*
Typ Fillet Weld Lengths

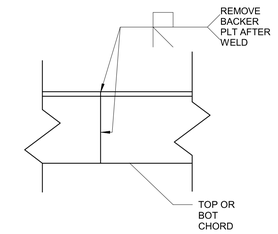

9 *3" = 1'-0"*
Typ Truss Chord Splice

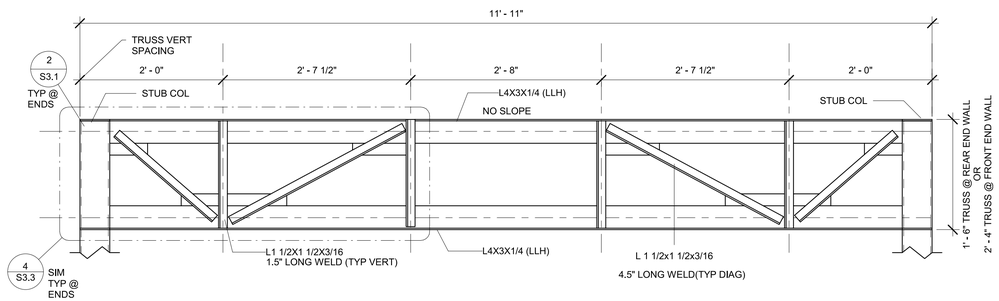

3 *1" = 1'-0"*
End Wall Truss

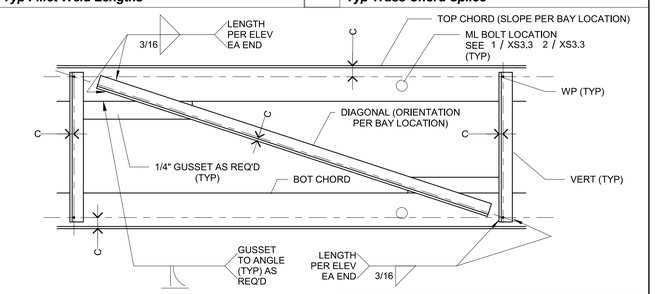

NOTE:
SEE DISTRIBUTION/S3.3 FOR ALL FILLET WELD LENGTH

7 *1 1/2" = 1'-0"*
Typ Truss Bay

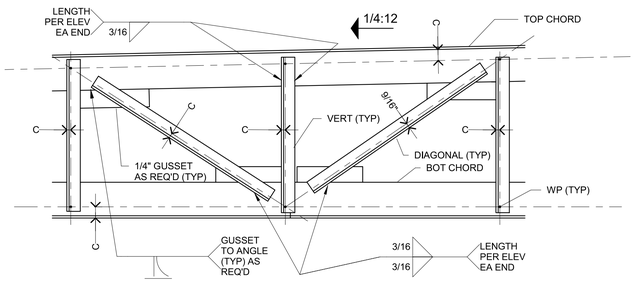

NOTE:
SEE 8 / S3.3 FOR ALL FILLET WELD LENGTH DISTRIBUTION

6 *1 1/2" = 1'-0"*
Typ Truss @ Center Bay (Mono Slope)

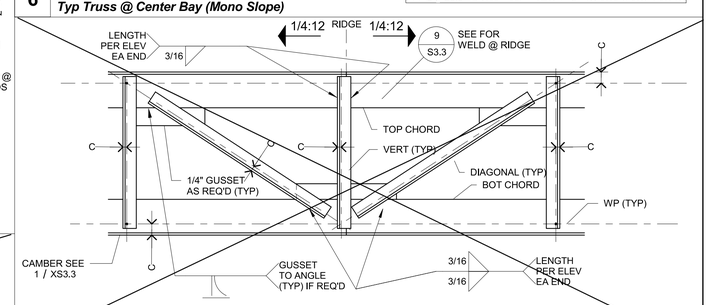

NOTE:
SEE 8 / S3.3 FOR ALL FILLET WELD LENGTH DISTRIBUTION

5 *1 1/2" = 1'-0"*
Typ Truss @ Center Bay (Dual Slope)

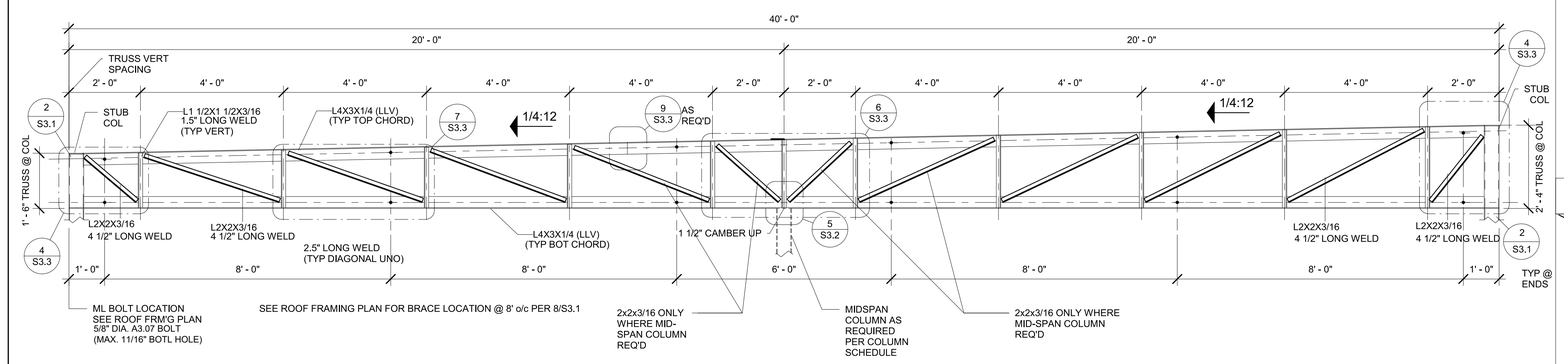

2 *1/2" = 1'-0"*
Mono Truss

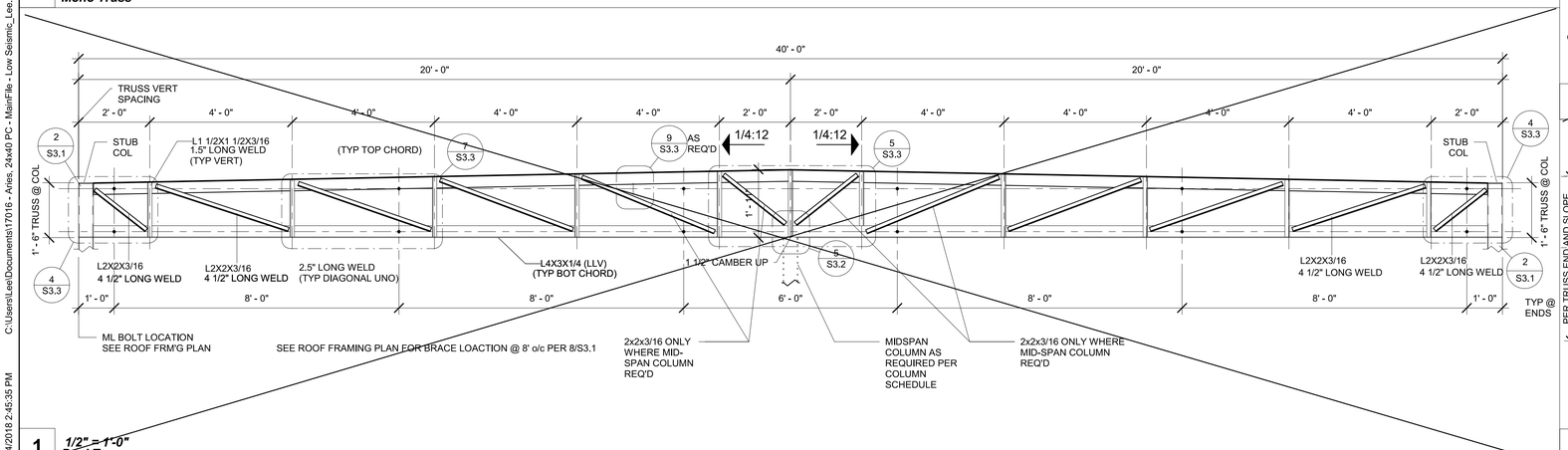

1 *1/2" = 1'-0"*
Dual Truss

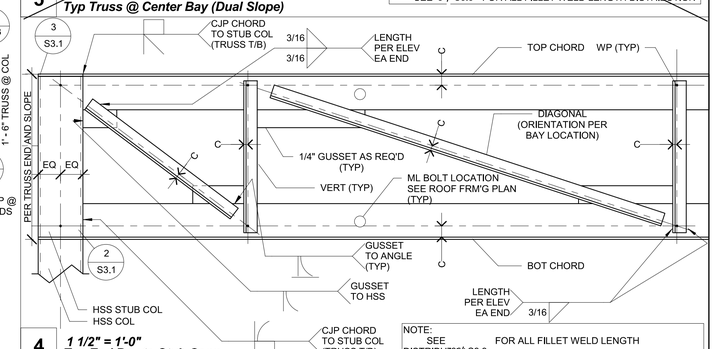

NOTE:
SEE DISTRIBUTION/S3.3 FOR ALL FILLET WELD LENGTH

4 *1 1/2" = 1'-0"*
Typ End Bay to Stub Conn

IDENTIFICATION STAMP
DIV. OF THE STATE ARCHITECT
APP: 01-119031 INC:
REVIEWED FOR
SS ☑ FLS ☑ ACS ☑
DATE: 10/22/2020

PROFESSIONAL STAMP

REGISTERED PROFESSIONAL ENGINEER
MANNY D. FRANCO
C-34380
STRUCTURAL
STATE OF CALIFORNIA

12/19/2017

THE PLANS, IDEAS & DESIGNS SHOWN ON THESE DRAWINGS ARE THE PROPERTY OF R&S TAVARES ASSOCIATES, INC. DEVISED SOLELY FOR THIS CONTRACT. THESE PLANS SHALL NOT BE USED, IN WHOLE OR IN PART, FOR ANY PURPOSE FOR WHICH THEY WERE NOT INTENDED WITHOUT THE EXPRESS WRITTEN CONSENT OF R&S TAVARES ASSOCIATES, INC. ©

CLIENT

CLASS LEASING LLC
1221 Harley Knox Boulevard
Perris, CA 92571

ORIGINAL PC STATE AGENCY APPROVAL
FILE NUMBER: PC-128
IDENTIFICATION STAMP
DIVISION OF THE STATE ARCHITECT
04 - 116504 INCR: 0
AC RM FLS EA SSR KER
DATE 07/19/2018

PROJECT TITLE
24' x 40'
EXPANDABLE TO
120' x 40'

PRE-CHECK (PC) DOCUMENT
Code: [2016] **CBC**
A separate project application for construction is required.

PROJECT SPECIFIC STATE AGENCY APPROVAL

Revision Schedule

#	Description	Date

SHEET TITLE
ROOF PERIMETER
TRUSS

PROJECT NUMBER
17016A

DRAWN BY
rMc/SC

CHECKED BY
JA/RT

DATE
2017/06/05

SHEET NO.
S3.3

SHEET OF SHEETS

C:\Users\Lee\Documents\17016 - Aries, 24x40 PC - MainFile - Low Seismic_Lee.rvt
1/4/2018 2:45:35 PM

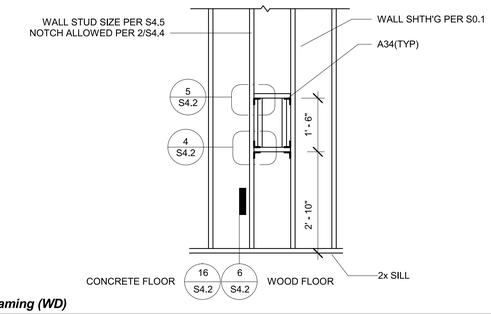

6 *1/2" = 1'-0"*
Typ Fire Extinguisher Framing (WD)

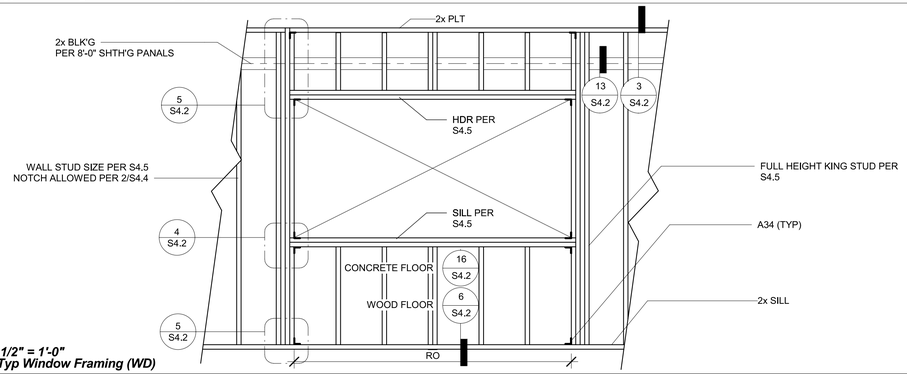

4 *1/2" = 1'-0"*
Typ Window Framing (WD)

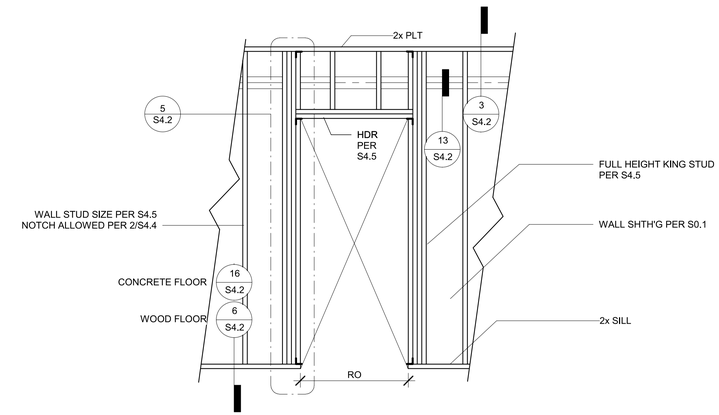

5 *1/2" = 1'-0"*
Typ Door Framing (WD)

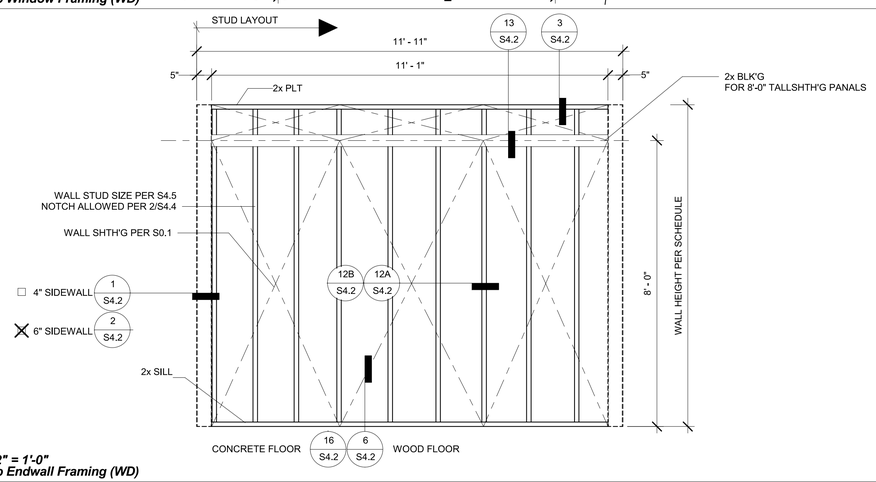

2 *1/2" = 1'-0"*
Typ Endwall Framing (WD)

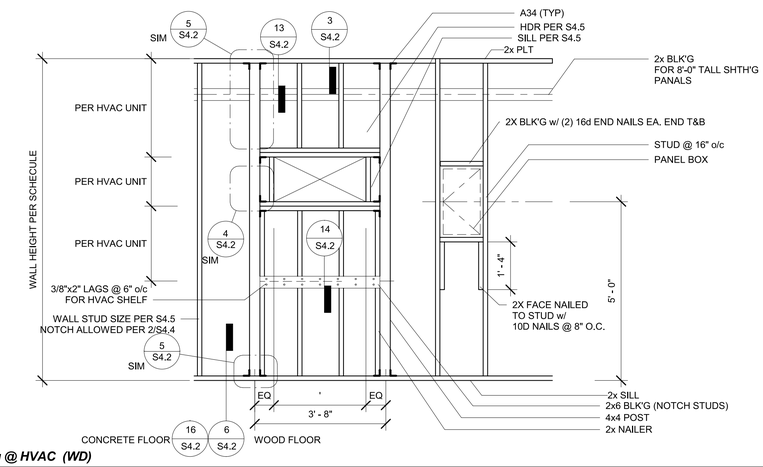

3 *1/2" = 1'-0"*
Typ Endwall Framing @ HVAC (WD)

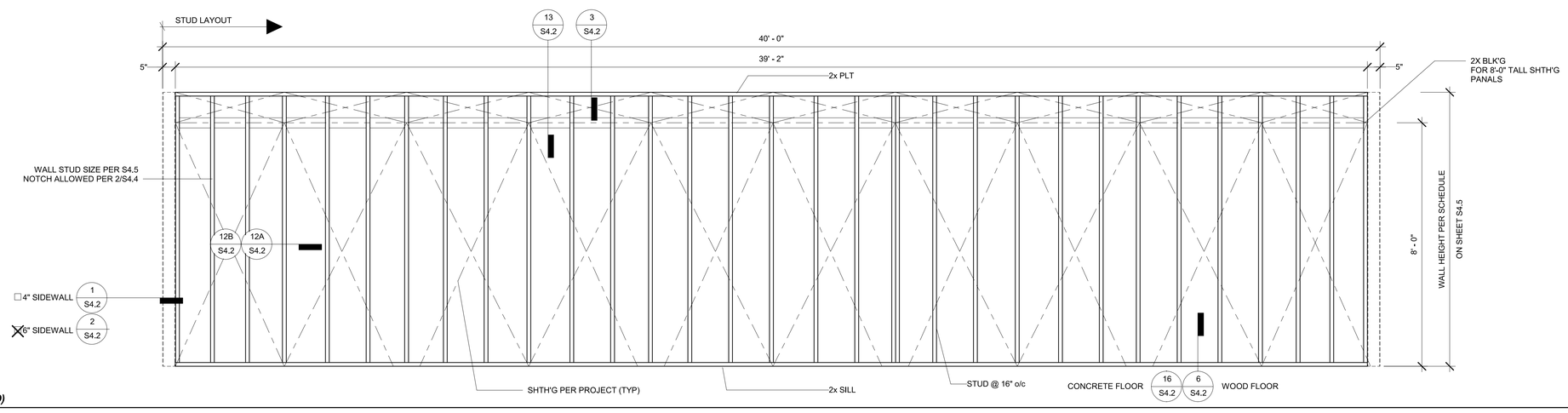

1 *1/2" = 1'-0"*
Typ Sidewall Framing (WD)

12/18/2017 6:02:23 PM C:\Users\Lee\Documents\17016 - Aries, 24x40 PC - MainFile - Low Seismic_Lee.rvt

IDENTIFICATION STAMP
DIV. OF THE STATE ARCHITECT
APP: 01-119031 INC:
REVIEWED FOR
SS ☑ FLS ☑ ACS ☑
DATE: 10/22/2020

PROFESSIONAL STAMP

REGISTERED PROFESSIONAL ENGINEER
MANNY D. FRANCO
No. 24380
STRUCTURAL
STATE OF CALIFORNIA

12/19/2017

THE PLANS, IDEAS & DESIGNS SHOWN ON THESE DRAWINGS ARE THE PROPERTY OF R&S TAVARES ASSOCIATES, INC. DEVISED SOLELY FOR THIS CONTRACT. THESE PLANS SHALL NOT BE USED, IN WHOLE OR IN PART, FOR ANY PURPOSE FOR WHICH THEY WERE NOT INTENDED WITHOUT THE EXPRESS WRITTEN CONSENT OF R&S TAVARES ASSOCIATES, INC. ©

CLIENT

CLASS LEASING LLC
1221 Harley Knox Boulevard
Perris, CA 92571

ORIGINAL PC STATE AGENCY APPROVAL
FILE NUMBER: PC-128
IDENTIFICATION STAMP
DIVISION OF THE STATE ARCHITECT
04 - 116504 INCR: 0
AC RM FLS EA SSR KER
DATE 07/19/2018

PROJECT TITLE
24' x 40'
EXPANDABLE TO
120' x 40'

PRE-CHECK (PC) DOCUMENT
Code: [2016] CBC
A separate project application for construction is required.

PROJECT SPECIFIC STATE AGENCY APPROVAL

Revision Schedule

#	Description	Date

SHEET TITLE
WD WALL
FRAMING
ELEVATIONS

PROJECT NUMBER
17016A

DRAWN BY
rMc/SC

CHECKED BY
JA/RT

DATE
2017/06/05

SHEET NO.
S4.1

SHEET OF SHEETS

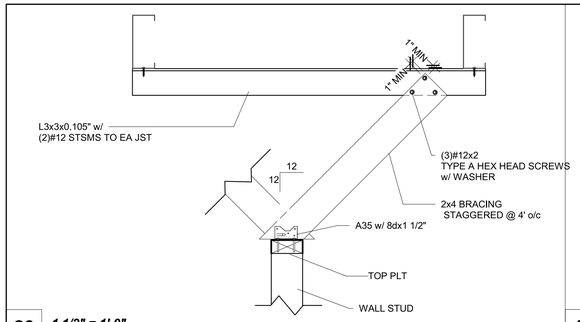

20 *1 1/2" = 1'-0"*
Sections - Interior Partition w/ Brace to Blk'g (WD)

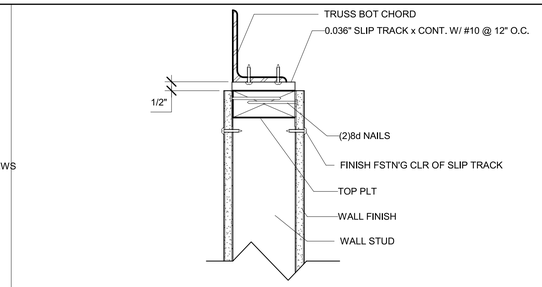

15 *3" = 1'-0"*
Section - Interior Wall Top Plate @ Truss (ML)

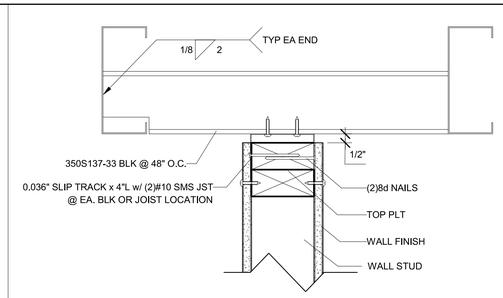

10 *3" = 1'-0"*
Sections - Interior Partition @ Blk'g (WD)

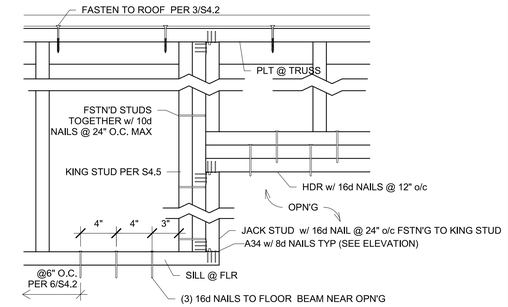

5 *1 1/2" = 1'-0"*
Elevation - Window/Door Hdr and Sill

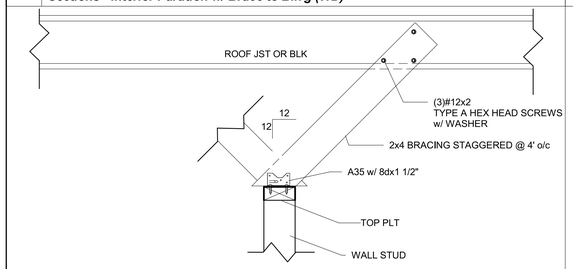

19 *1 1/2" = 1'-0"*
Sections - Interior Partition w/ Brace (WD)

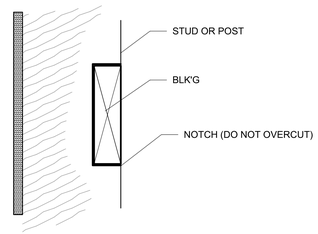

14 *3" = 1'-0"*
Notch Stud @ Blk'g

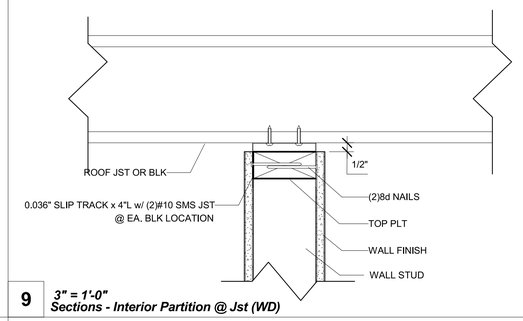

9 *3" = 1'-0"*
Sections - Interior Partition @ Jst (WD)

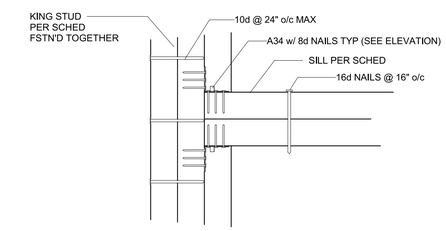

4 *3" = 1'-0"*
Elevation - Ext Wall Sill @ Window

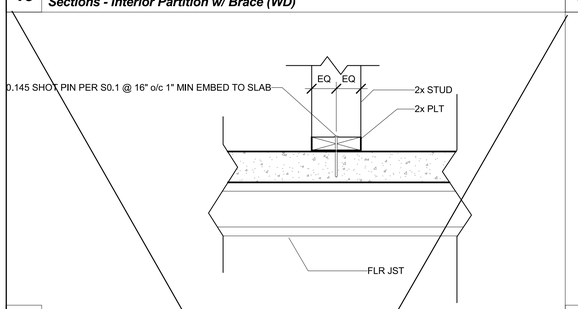

18 *1 1/2" = 1'-0"*
Typ Partition Sill Connection (CONC)

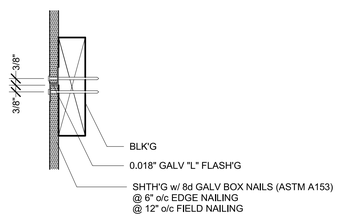

13 *3" = 1'-0"*
Shth'g @ Blk'g

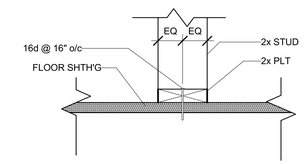

8 *1 1/2" = 1'-0"*
Typ Partition Sill Connection (WD)

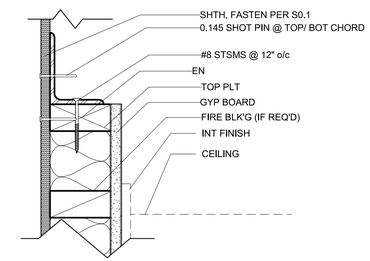

3 *3" = 1'-0"*
Section - Exterior Wall Top Plate @ Truss (WD)

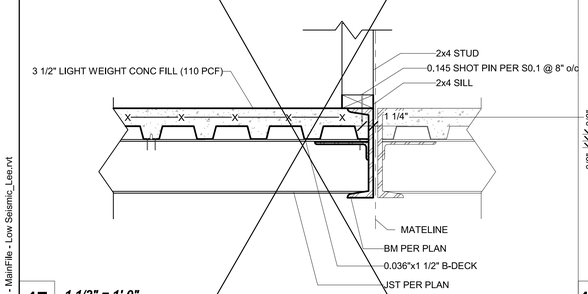

17 *1 1/2" = 1'-0"*
Wall Sill Plt Connection @ Interior Sidewall (CONC)

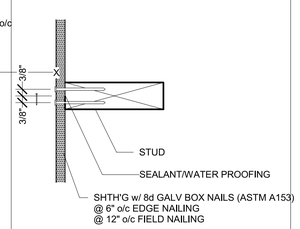

12A *3" = 1'-0"*
Shth'g @ Butt Jnt

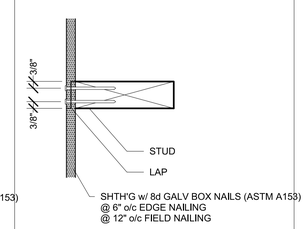

12B *3" = 1'-0"*
Shth'g @ Lap Jnt

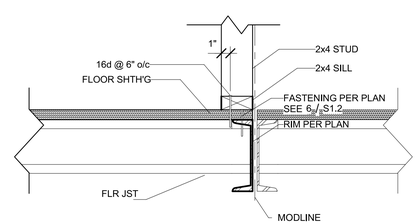

7 *1 1/2" = 1'-0"*
2x4 Wall Sill Connection @ Interior Sidewalls (WD)

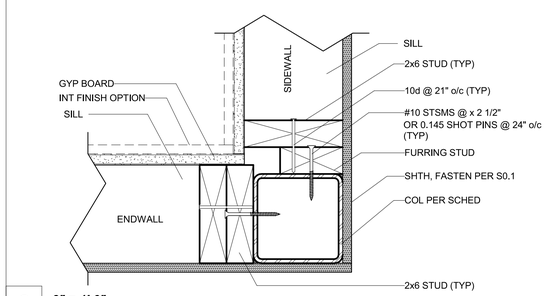

2 *3" = 1'-0"*
2x6 Framing @ Column (WD)

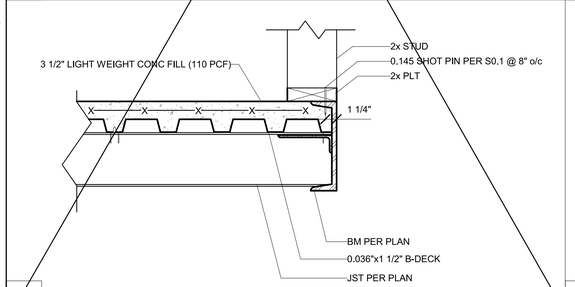

16 *1 1/2" = 1'-0"*
Wall Sill Plt Connection @ Exterior Rim (CONC)

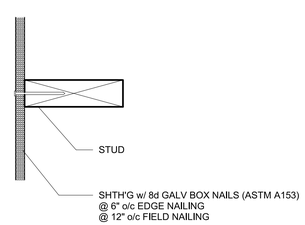

11 *3" = 1'-0"*
Shth'g @ Stud Conn

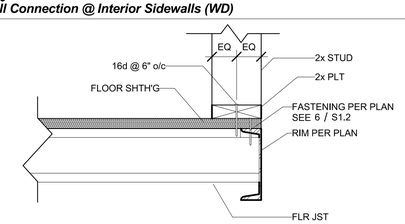

6 *1 1/2" = 1'-0"*
Wall Sill Connection @ Exterior Rim (WD)

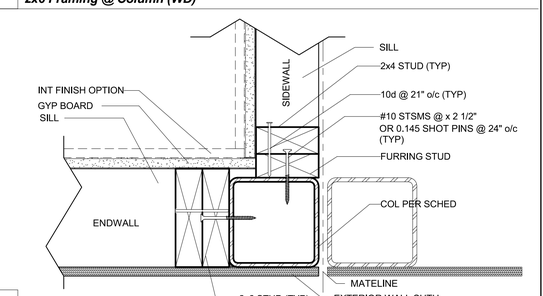

1 *3" = 1'-0"*
Interior Sidewall Framing @ Column (WD)

IDENTIFICATION STAMP
DIV. OF THE STATE ARCHITECT
APP: 01-119031 INC:
REVIEWED FOR
SS ☑ FLS ☑ ACS ☑
DATE: 10/22/2020

PROFESSIONAL STAMP

REGISTERED PROFESSIONAL ENGINEER
MANNY D. FRANCO
C-24380
STRUCTURAL
STATE OF CALIFORNIA

12/19/2017

THE PLANS, IDEAS & DESIGNS SHOWN ON THESE DRAWINGS ARE THE PROPERTY OF R&S TAVARES ASSOCIATES, INC. DEVISED SOLELY FOR THIS CONTRACT. THESE PLANS SHALL NOT BE USED, IN WHOLE OR IN PART, FOR ANY PURPOSE FOR WHICH THEY WERE NOT INTENDED WITHOUT THE EXPRESS WRITTEN CONSENT OF R&S TAVARES ASSOCIATES, INC. ©

CLIENT

CLASS LEASING LLC
1221 Harley Knox Boulevard
Perris, CA 92571

ORIGINAL PC STATE AGENCY APPROVAL
FILE NUMBER: PC-128

IDENTIFICATION STAMP
DIVISION OF THE STATE ARCHITECT
04 - 116504 INCR: 0
AC RM FLS EA SSR KER
DATE 07/19/2018

PROJECT TITLE
24' x 40'
EXPANDABLE TO
120' x 40'

PRE-CHECK (PC) DOCUMENT
Code: [2016] CBC
A separate project application for construction is required.

PROJECT SPECIFIC STATE AGENCY APPROVAL

Revision Schedule

#	Description	Date

SHEET TITLE
WALL DETAILS
(WOOD FRAMING)

PROJECT NUMBER
17016A

DRAWN BY
rMc/SC

CHECKED BY
JA/RT

DATE
2017/06/05

SHEET NO.
S4.2

SHEET OF SHEETS

1/4/2018 2:45:41 PM C:\Users\Lee\Documents\17016 - Aries, 24x40 PC - MainFile - Low Seismic_Lee.rvt

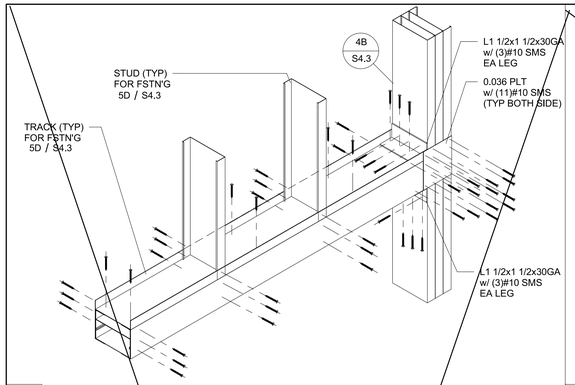

8 *1 1/2" = 1'-0"*
(3)Stud(3)Track - Type(4)

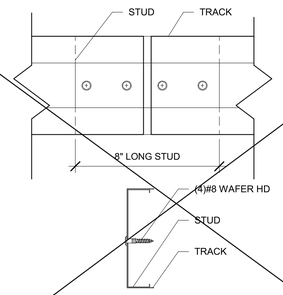

4 *3" = 1'-0"*
Track Splice

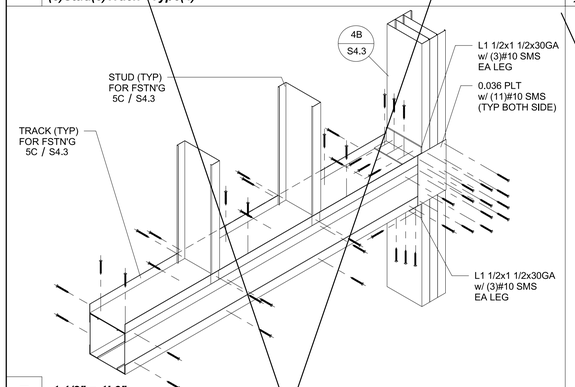

7 *1 1/2" = 1'-0"*
(3)Track(2)Stud - Type(3)

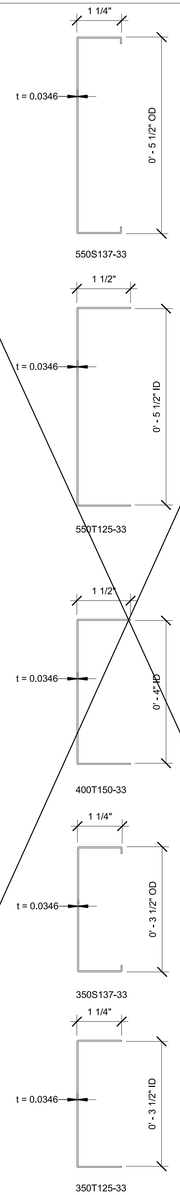

3 *6" = 1'-0"*
STUD AND TRACK

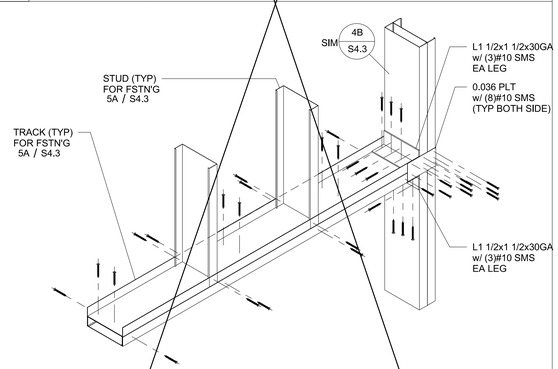

6 *1 1/2" = 1'-0"*
(2)Track(1)Stud - Type(2)

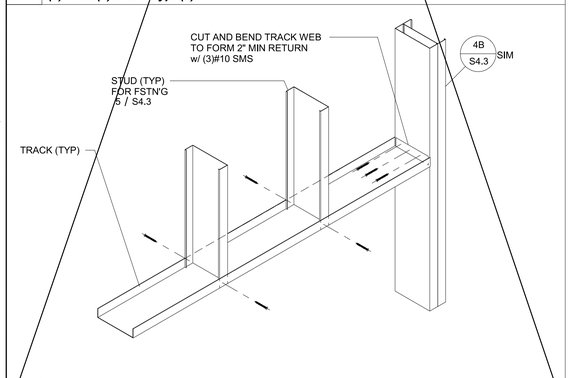

5 *1 1/2" = 1'-0"*
Single Track - Type(1)

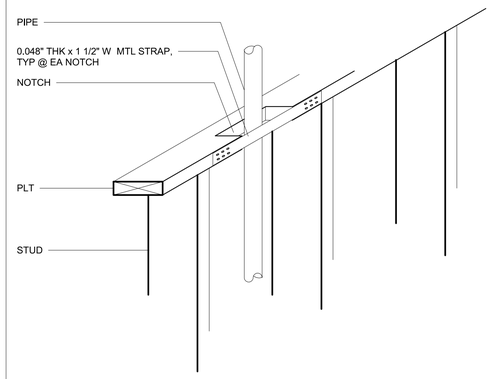

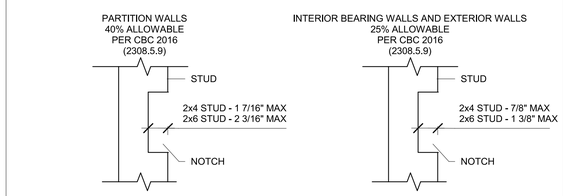

2 *1 1/2" = 1'-0"*
Plt Notch

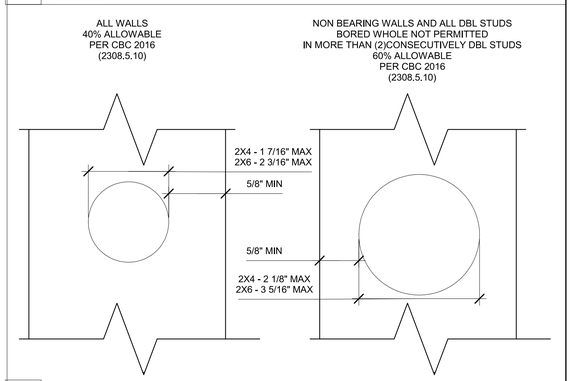

1 *6" = 1'-0"*
Stud Penetration

IDENTIFICATION STAMP
DIV. OF THE STATE ARCHITECT
APP: 01-119031 INC:
REVIEWED FOR
SS ☑ FLS ☑ ACS ☑
DATE: 10/22/2020

PROFESSIONAL STAMP

REGISTERED PROFESSIONAL ENGINEER
MANNY D. FRANCO
C-43801
STRUCTURAL
STATE OF CALIFORNIA

12/19/2017

THE PLANS, IDEAS & DESIGNS SHOWN ON THESE DRAWINGS ARE THE PROPERTY OF R&S TAVARES ASSOCIATES, INC. DEVISED SOLELY FOR THIS CONTRACT. THESE PLANS SHALL NOT BE USED, IN WHOLE OR IN PART, FOR ANY PURPOSE FOR WHICH THEY WERE NOT INTENDED WITHOUT THE EXPRESS WRITTEN CONSENT OF R&S TAVARES ASSOCIATES, INC. ©

CLIENT

CLASS LEASING LLC
1221 Harley Knox Boulevard
Perris, CA 92571

ORIGINAL PC STATE AGENCY APPROVAL
FILE NUMBER: PC-128
IDENTIFICATION STAMP
DIVISION OF THE STATE ARCHITECT
04 - 116504 INCR: 0
AC RM FLS EA SSR KER
DATE 07/19/2018

PROJECT TITLE
24' x 40'
EXPANDABLE TO
120' x 40'

PRE-CHECK (PC) DOCUMENT
Code: [2016] **CBC**
A separate project application for construction is required.

PROJECT SPECIFIC STATE AGENCY APPROVAL

Revision Schedule

#	Description	Date

SHEET TITLE
TYP FRAMING

PROJECT NUMBER
17016A

DRAWN BY
rMc/SC

CHECKED BY
JA/RT

DATE
2017/06/05

SHEET NO.
S4.4

SHEET OF SHEETS

12/18/2017 6:02:34 PM C:\Users\Lee\Documents\17016 - Aries, 24x40 PC - MainFile - Low Seismic_Lee.rvt

2x4 Interior Wall Opening Schedule

COL HEIGHT	OPN'G SIZE	HDR			SILL			FULL HEIGHT KING STUD		
		Lumber	Number	Type	Lumber	Number	Type	Lumber	Number	Type
9FT	3070	HF	1	#2	-	-	-	HF	2	#2
		DF	1	#2	-	-	-	DF	2	#2
	4070	HF	1	#2	-	-	-	HF	2	#2
		DF	1	#2	-	-	-	DF	2	#2
	6040	HF	2	#2	DF	2	#2	HF	2	#2
		DF	2	#2	DF	2	#2	DF	2	#2
	8040	HF	3	#2	HF	3	#2	HF	2	#2
		DF	3	#2	DF	3	#2	DF	2	#2
10FT	3070	HF	1	#2	-	-	-	HF	2	#2
		DF	1	#2	-	-	-	DF	2	#2
	4070	HF	1	#2	-	-	-	HF	2	#2
		DF	1	#2	-	-	-	DF	2	#2
	6040	HF	2	#2	HF	2	#2	HF	2	#2
		DF	2	#2	DF	2	#2	DF	2	#2
	8040	HF	3	#2	HF	3	#2	HF	2	#2
		DF	3	#2	DF	3	#2	DF	2	#2

2x6 Exterior Wall Opening Schedule (SHTH'G FINISH)

COL HEIGHT	OPN'G SIZE	HDR			SILL			FULL HEIGHT KING STUD		
		Lumber	Number	Type	Lumber	Number	Type	Lumber	Number	Type
9FT	3070	HF	1	#2	HF	1	#2	HF	1	#2
		DF	1	#2	DF	1	#2	DF	1	#2
	4070	HF	1	#2	HF	1	#2	HF	1	#2
		DF	1	#2	DF	1	#2	DF	1	#2
	6040	HF	1	#2	HF	1	#2	HF	1	#2
		DF	1	#2	DF	1	#2	DF	1	#2
	8040	HF	2	#2	HF	1	#2	HF	2	#2
		DF	2	#2	DF	1	#2	DF	2	#2
10FT	3070	HF	1	#2	HF	1	#2	HF	1	#2
		DF	1	#2	DF	1	#2	DF	1	#2
	4070	HF	1	#2	HF	1	#2	HF	1	#2
		DF	1	#2	DF	1	#2	DF	1	#2
	6040	HF	2	#2	HF	1	#2	HF	2	#2
		DF	2	#2	DF	1	#2	DF	2	#2
	8040	HF	3	#2	HF	1	#2	HF	2	#2
		DF	3	#2	DF	1	#2	DF	2	#2

2x6 Exterior Wall Opening Schedule (PLASTER FINISH)

COL HEIGHT	OPN'G SIZE	HDR			SILL			FULL HEIGHT KING STUD		
		Lumber	Number	Type	Lumber	Number	Type	Lumber	Number	Type
9FT	3070	HF	1	#2	HF	1	#2	HF	1	#2
		DF	1	#2	DF	1	#2	DF	1	#2
	4070	HF	1	#2	HF	1	#2	HF	1	#2
		DF	1	#2	DF	1	#2	DF	1	#2
	6040	HF	2	#2	HF	1	#2	HF	2	#2
		DF	2	#2	DF	1	#2	DF	1	#2
	8040	HF	3	#2	HF	1	#2	HF	2	#2
		DF	3	#2	DF	1	#2	DF	2	#2
10FT	3070	HF	1	#2	HF	1	#2	HF	2	#2
		DF	1	#2	DF	1	#2	DF	1	#2
	4070	HF	1	#2	HF	1	#2	HF	2	#2
		DF	1	#2	DF	1	#2	DF	1	#2
	6040	HF	2	#2	HF	1	#2	HF	2	#2
		DF	2	#2	DF	1	#2	DF	2	#2
	8040	HF	3	#2	HF	1	#2	HF	2	#2
		DF	3	#2	DF	1	#2	DF	2	#2

2x4 Interior Wall Framing Schedule

COL HEIGHT	Typical Location				4ft From Building Corner			
	Lumber	Number	Type	Spacing	Lumber	Number	Type	Spacing
9	HF	1	#2	16" O.C.	-	-	-	-
	DF	1	#2	16" O.C.	-	-	-	-
10	HF	1	#2	16" O.C.	-	-	-	-
	DF	1	#2	16" O.C.	-	-	-	-

2x6 Exterior Wall Framing Schedule (SHTH'G FINISH)

COL HEIGHT	Typical Location				4.8ft From Building Corner			
	Lumber	Number	Type	Spacing	Lumber	Number	Type	Spacing
9	HF	1	#2	16" O.C.	HF	1	#2	16" O.C.
	DF	1	#2	16" O.C.	DF	1	#2	16" O.C.
10	HF	1	#2	16" O.C.	HF	1	#2	16" O.C.
	DF	1	#2	16" O.C.	DF	1	#2	16" O.C.

2x6 Exterior Wall Framing Schedule (PLASTER FINISH)

COL HEIGHT	Typical Location				4.8ft From Building Corner			
	Lumber	Number	Type	Spacing	Lumber	Number	Type	Spacing
9	HF	1	#2	16" O.C.	HF	1	#2	16" O.C.
	DF	1	#2	16" O.C.	DF	1	#2	16" O.C.
10	HF	1	#2	16" O.C.	HF	1	#2	16" O.C.
	DF	1	#2	16" O.C.	DF	1	#2	16" O.C.

NOTE: SEE DETAIL 1 ON SHEETS A2.1 - A2.8

☐ 350 Interior Wall Opening Schedule --Studs = 350S137-33 --Track = 350T125-33

Col Ht	Opn'g Size	HDR		SILL		FULL HEIGHT KING STUD		
		Type	Reference	Type	Reference	Type	Num.	Size
9'- 0"	3070	1	5	N/A	N/A	Stud	(2)	350S137-33
	4070	1	5	N/A	N/A	Stud	(2)	350S137-33
	6040	2	6	2	6	Stud	(3)	350S137-33
	8040	3	8	3	8	Stud	(3)	350S137-33
10'- 0"	3070	1	5	N/A	N/A	Stud	(2)	350S137-33
	4070	2	5	N/A	N/A	Stud	(2)	350S137-33
	6040	2	6	2	6	Stud	(3)	350S137-33
	8040	4	8	4	8	Stud	(4)	350S137-33

☐ 550 Exterior Wall Opening Schedule (SHTH'G FINSIH) --Studs = 550S137-33 --Track = 550T125-33

Col Ht	Opn'g Size	HDR		SILL		FULL HEIGHT KING STUD		
		Type	Reference	Type		Type	Num.	Size
9'- 0"	3070	1	5	N/A	N/A	Stud	(2)	550S137-33
	4070	1	5	N/A	N/A	Stud	(2)	550S137-33
	6040	2	6	2	6	Stud	(3)	550S137-33
	8040	3	6	3	6	Stud	(3)	550S137-33
10'- 0"	3070	1	5	N/A	N/A	Stud	(2)	550S137-33
	4070	2	5	N/A	N/A	Stud	(2)	550S137-33
	6040	2	6	2	6	Stud	(3)	550S137-33
	8040	4	6	4	6	Stud	(4)	550S137-33

☐ 550 Exterior Wall Opening Schedule (PLASTER FINSIH) --Stud = 550S137-33 --Track = 550T125-33

Col Ht	Opn'g Size	HDR		SILL		FULL HEIGHT KING STUD		
		Type		Type		Type	Num.	Size
9'- 0"	3070	1	5	N/A	N/A	Stud	(2)	550S137-33
	4070	1	5	N/A	N/A	Stud	(2)	550S137-33
	6040	2	6	2	6	Stud	(3)	550S137-33
	8040	3	6	3	6	Stud	(3)	550S137-33
10'- 0"	3070	1	5	N/A	N/A	Stud	(2)	550S137-33
	4070	2	5	N/A	N/A	Stud	(2)	550S137-33
	6040	2	6	2	6	Stud	(3)	550S137-33
	8040	4	6	4	6	Stud	(4)	550S137-33

☐ 350 Interior Wall Framing Schedule

Column Height	Typ Wall Framing				4' From Corner Stud			
	Size	Number	Type	Spacing	Lumber	Number	Type	Spacing
9'- 0"	350S137-33	(1)	Stud	16" o/c	-	-	-	-
10'- 0"	350S137-33	(1)	Stud	16" o/c	-	-	-	-

☐ 550 Exterior Wall Framing Schedule (SHTH'G FINISH)

Column Height	Typ Wall Framing				4' From Corner Stud			
	Size	Number	Type	Spacing	Lumber	Number	Type	Spacing
9'- 0"	550S137-33	(1)	Stud	16" o/c	550S137-33	(1)	Stud	16" o/c
10'- 0"	550S137-33	(1)	Stud	16" o/c	550S137-33	(1)	Stud	16" o/c

☐ 550 Exterior Wall Framing Schedule (PLASTER FINISH)

Column Height	Typ Wall Framing				4' From Corner Stud			
	Size	Number	Type	Spacing	Lumber	Number	Type	Spacing
9'- 0"	550S137-33	(1)	Stud	16" o/c	550S137-33	(1)	Stud	16" o/c
10'- 0"	550S137-33	(1)	Stud	16" o/c	550S137-33	(1)	Stud	16" o/c

C:\Users\Lee\Documents\17016 - Aries, 24x40 PC - MainFile - Low Seismic_Lee.rvt

12/18/2017 6:02:38 PM

IDENTIFICATION STAMP
DIV. OF THE STATE ARCHITECT
APP: 01-119031 INC:
REVIEWED FOR
SS ☑ FLS ☑ ACS ☑
DATE: 10/22/2020

PROFESSIONAL STAMP

REGISTERED PROFESSIONAL ENGINEER
MANNY D. FRANCO
C-43804
STRUCTURAL
STATE OF CALIFORNIA

12/19/2017

THE PLANS, IDEAS & DESIGNS SHOWN ON THESE DRAWINGS ARE THE PROPERTY OF R&S TAVARES ASSOCIATES, INC. DEVISED SOLELY FOR THIS CONTRACT. THESE PLANS SHALL NOT BE USED, IN WHOLE OR IN PART, FOR ANY PURPOSE FOR WHICH THEY WERE NOT INTENDED WITHOUT THE EXPRESS WRITTEN CONSENT OF R&S TAVARES ASSOCIATES, INC. ©

CLIENT

CLASS LEASING LLC
1221 Harley Knox Boulevard
Perris, CA 92571

ORIGINAL PC STATE AGENCY APPROVAL
FILE NUMBER: PC-128
IDENTIFICATION STAMP
DIVISION OF THE STATE ARCHITECT
04 - 116504 INCR: 0
AC RM FLS EA SSR KER
DATE 07/19/2018

PROJECT TITLE

24' x 40'
EXPANDABLE TO
120' x 40'

PRE-CHECK (PC) DOCUMENT
Code: [2016] CBC
A separate project application for construction is required.

PROJECT SPECIFIC STATE AGENCY APPROVAL

Revision Schedule

#	Description	Date

SHEET TITLE

FRAMING SCHEDULES

PROJECT NUMBER
17016A

DRAWN BY
rMc/SC

CHECKED BY
JA/RT

DATE
2017/06/05

SHEET NO.
S4.5

SHEET OF SHEETS

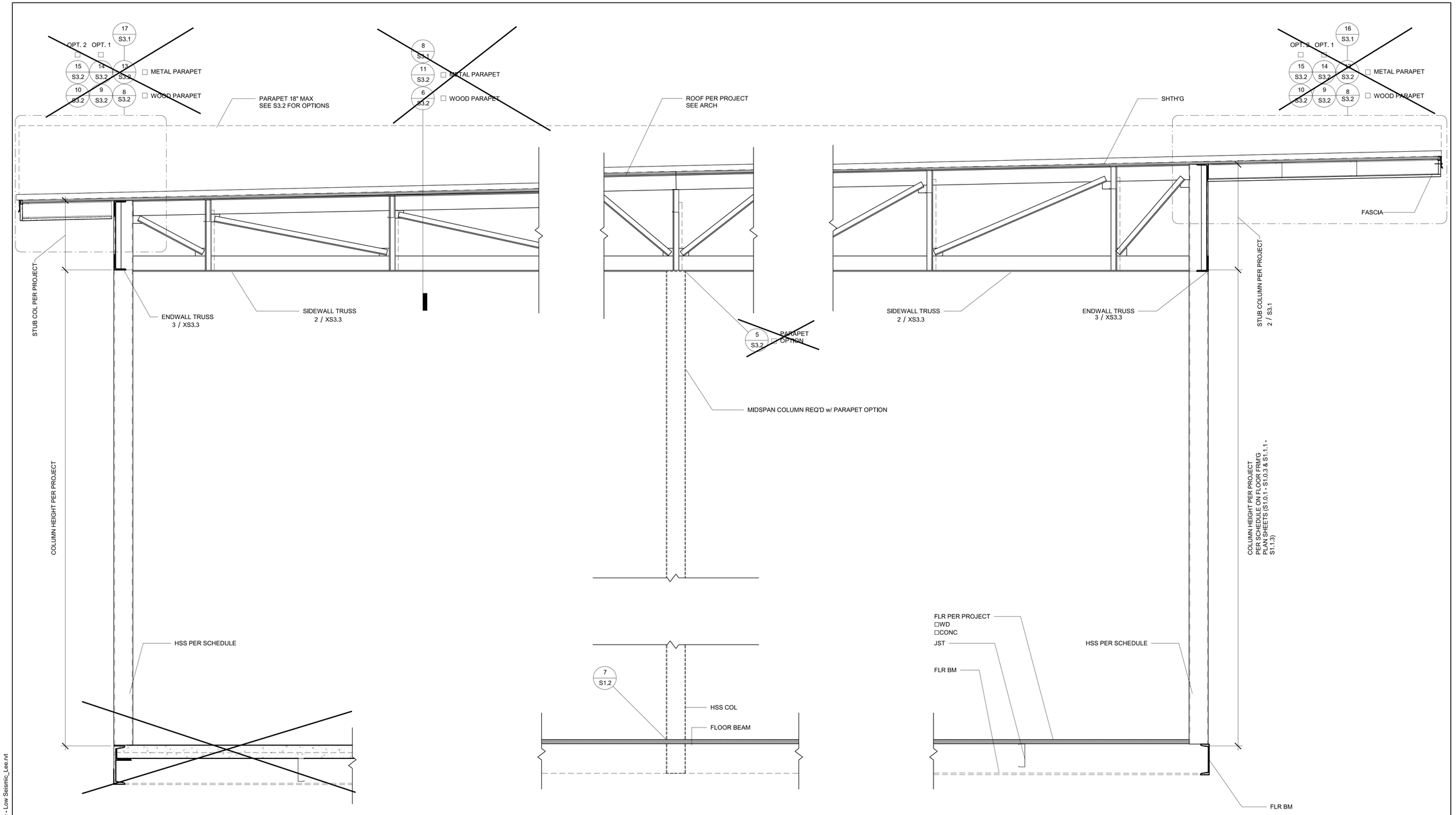

1 *1" = 1'-0"*
Structural Section (MONO)

1/5/2018 11:34:51 AM C:\Users\Lee\Documents\17016 - Aries, 24x40 PC - MainFile - Low Seismic_Lee.rvt

IDENTIFICATION STAMP
DIV. OF THE STATE ARCHITECT
APP: 01-119031 INC:
REVIEWED FOR
SS ☑ FLS ☑ ACS ☑
DATE: 10/22/2020

PROFESSIONAL STAMP

REGISTERED PROFESSIONAL ENGINEER
MANNY D. FRANCO
C-23801
STRUCTURAL
STATE OF CALIFORNIA

12/19/2017

THE PLANS, IDEAS & DESIGNS SHOWN ON THESE DRAWINGS ARE THE PROPERTY OF R&S TAVARES ASSOCIATES, INC. DEVISED SOLELY FOR THIS CONTRACT. THESE PLANS SHALL NOT BE USED, IN WHOLE OR IN PART, FOR ANY PURPOSE FOR WHICH THEY WERE NOT INTENDED WITHOUT THE EXPRESS WRITTEN CONSENT OF R&S TAVARES ASSOCIATES, INC. ©

CLIENT

CLASS LEASING LLC
1221 Harley Knox Boulevard
Perris, CA 92571

ORIGINAL PC STATE AGENCY APPROVAL
FILE NUMBER: PC-128
IDENTIFICATION STAMP
DIVISION OF THE STATE ARCHITECT
04 - 116504 INCR: 0
AC RM FLS EA SSR KER
DATE 07/19/2018

PROJECT TITLE
24' x 40'
EXPANDABLE TO
120' x 40'

PRE-CHECK (PC) DOCUMENT
Code: [2016] **CBC**
A separate project application for construction is required.

PROJECT SPECIFIC STATE AGENCY APPROVAL

Revision Schedule

#	Description	Date

SHEET TITLE
LONG. SECTION - (MONO)

PROJECT NUMBER
17016A

DRAWN BY
rMc/SC

CHECKED BY
JA/RT

DATE
2017/06/05

SHEET NO.
S5.0

SHEET OF SHEETS

PARTIAL LIST OF APPLICABLE CODES AS OF JULY 1, 2014

2013 ADMINISTRATIVE CODE, PART 1, TITLE 24 C.C.R. *
2013 CALIFORNIA BUILDING CODE (CBC), PART 2, TITLE 24 C.C.R.
(2012 INTERNATIONAL BUILDING CODE VOLUMES 1-2 AND 2013 CALIFORNIA AMENDMENTS)
2013 CALIFORNIA ELECTRICAL CODE (CEC), PART 3, TITLE 24 C.C.R.
(2011 NATIONAL ELECTRICAL CODE AND 2013 CALIFORNIA AMENDMENTS)
2013 CALIFORNIA MECHANICAL CODE (CMC), PART 4, TILTLE 24 C.C.R.
(2012 UNIFORM MECHANICAL CODE AND 2013 CALIFORNIA AMENDMENTS)
2013 CALIFORNIA PLUMBING CODE (CPC), PART 5, TITLE 24 C.C.R.
(2012 UNIFORM PLUMBING CODE AND 2013 CALIFORNIA AMENDMENTS)
2013 CALIFORNIA ENERGY CODE (CEC), PART 6, TITLE 24 C.C.R
2013 CALIFORNIA FIRE CODE, PART 9, TITLE 24 C.C.R.
(2012 INTERNATIONAL FIRE CODE AND 2013 CALIFORNIA AMENDMENTS)
2013 CALIFORNIA GREEN BUILDING STANDARDS CODE, PART 11, TITLE 24 C.C.R.
2013 CALIFORNIA REFERENCED STANDARDS, PART 12, TITLE 24 C.C.R
TITLE 19 C.C.R., PUBLIC SAFETY, STATE FIRE MARSHAL REGULATIONS.
2007 ASME A17.1 (W/ A17.1A/CSA B44A-08 ADDENDA) SAFETY CODE FOR ELEVATORS AND ESCALATORS

*CALIFORNIA ADMINISTRATIVE CODE, PART1, CHAPTER 10, ADMINISTRATIVE REGULATIONS FOR THE CALIFORNIA ENERGY COMMISSION (CEC)

GENERAL NOTES

CHANGES TO THE APPROVED DRAWINGS AND SPECIFICATION SHALL BE MADE BY AN ADDENDUM OR CONSTRUCTION CHANGE DOCUMENT(CCD) BY DSA AS REQUIRED BY SECTION 4-338 PART1, TITLE 24, CCR

A PROJECT INSPECTOR EMPLOYED BY THE DISTRICT(OWNER) AND APPROVED BY DSA SHALL PROVIDE CONTINUOUS INSPECTION OF THE WORK. DUTIES OF INSPECTOR ARE DEFINED IN SECTION 4-342, PART 1 TITLE 24, CCR

COMPLETE ACCESS IS A DIVISION OF INTEGRATED STAIR SYSTEMS INC. WITH CORPORATE OFFICES LOCATED IN 1345 RYAN RD, BUCKLEY, WA 98321, (360) 829-4220

DESIGN LOADS

LIVE LOAD:	100 PSF (4.8 kPa)
HANDRAIL IMPACT:	200 LBS (0.9 kN)
HANDRAIL DIST. LOAD:	50 PLF (0.7 kN/m)
SESIMIC:	Ss= 1.875g, S1= 0.675, R= 1.25, SITE CLASS D
LATERAL RESISTING SYST:	OTHER STRUCTURES SIMILAR TO BUILDINGS
WIND:	130 MPH, 3 SEC GUST EXPOSURE "C", Kzt= 1.0
SEIS IMPORTANCE FACTOR:	Ie= 1.25, Iw= 1.0
SNOW LOAD:	0 PSF (0 kPa)
SOIL ALLOWABLE BEARING:	1,000 PSF (4.8 kPa)

MATERIALS

SQUARE STEEL TUBE	ASTM A513 GR. C	Fy= 33 KSI (345 MPa)
RAMP OVERHANG POST	ASTM A500 B	Fy= 46 KSI

*ALL STEEL TO BE COATED WITH GALVANIZED RUST INHIBITING COATING

WOOD FOUNDATION SHALL BE OF FOUNDATION GRADE REDWOOD OR PRESERVATIVE PRESSURE TREATED HEM-FIR #2 AND IS ALLOWED TO REST DIRECTLY ON SOIL OR PAVEMENT.

WELDS

WELDING SHALL BE IN ACCORDANCE WITH AWS D.1.1-10 USING E70XX ELECTRODES FOR STEEL
AND AWS D1.2 AND A5.10 FOR ALUMINUM, USING ALMIGWELD ER4043

BOLTS, SCREWS AND NAILS

STEEL TO STEEL CONNECTIONS: ASTM A307 CARBON STEEL BOLTS SHALL BE GRADE 5 ZINC PLATED, HOT DIPPED GALVANIZED TO ASTM A153 OR ELECTROGALVANIZED TO ASTM B63.3. FASTENER SHALL BE LUBRICATED TO ELIMINATE GALLING. ALL STEEL MEMBERS IN CONTACT WITH ALUMINIUM SHALL BE ZINC COATED TO ELIMINATE GALVANIC REACTION.

STEEL TO STEEL & WOOD CONNECTIONS: ANSI/ASME STEEL LAG SCREWS, STEEL STANDARD WOOD SCREWS, WOOD TO WOOD CONNECTION: ASTM STANDARD COMMOM STEEL NAIL.

ITW RED HEAD CONCRETE WEDGE ANCHORS SHALL BE INSTALLED PER RECOMMENDATION SHOWN IN ESR-2427

HANDRAIL NOTES:

1) MANEUVERING CLEARANCE ON EXTERIOR PULL SIDE OF DOOR SHALL BE 24" (610MM) MINIMUM WITH 60" (1524MM) MINIMUM LANDING IN FRONT OF DOOR.

2) HANDRAILS SHALL BE CONTINUOUS ALONG BOTH SIDES. HANDRAILS SHALL BE PARALLEL WITH THE SURFACE AND PROJECT 12" (301MM) ON TOP OF RISER AND 12" (301MM) PLUS 1 TREAD AT BOTTOM RISER AT RAMPS WHERE HANDRAIL ARE NOT CONTINUOUS BETWEEN RUNS THE HANDRAIL SHALL EXTEND HORIZONTALLY ABOVE THE LANDING 12" (301MM) MINIMUM BEYOND TOP AND BOTTOM RAMPS

3) TOP OF HANDRAILS SHALL BE MOUNTED BETWEEN 34" (864MM) AND 38" (965MM) ABOVE THE WALKING SURFACE, ONE CONSISTENT HEIGHT, BEIGINNING TO END.

4) CLEARANCE BETWEEN RAIL AND WALL SHALL BE A MINIMUM OF 1-1/2" (38MM).

5) GUARDS ARE TO BE DESIGNED FOR A CONCENTRATED LOAD OF 200 LBF (0.9 kN) APPLIED @ ANY POINT AND ANY DIRECTION ALONG THE RAIL OR A UNIFORM LOAD OF 50 PLF (0.7 kN/m) APPLIED HORIZONTALLY @ HANDRAIL HEIGHT.

7) HANDRAILS SHALL HAVE A CIRCULAR CROSS SECTION WITH AN OUTSIDE DIAMETER OF 1-1/4" (31.75MM) MINIMUM AND NOT GREATER THAN 2" (51MM) MAXIMUM.

8) GRIPPING SURFACE SHALL BE UNINTERRUPTED BY POSTS OR OTHER CONSTRUCTION ELEMENTS OR OBSTRUCTIONS.

9) HANDRAILS SHALL NOT ROTATE IN THEIR FITTINGS.

10) ENDS OF HANDRAILS SHALL RETURN SMOOTHLY TO FLOOR, WALL OR POST.

RAMP NOTES

1) RAMPS SHALL CONFORM TO CBC 2016 TITLE 24 PART 2, CHAPTER 11B, 11B-405

2) RAMP SHALL HAVE A RUNNING SLOPE NOT STEEPER THAN 1:12 (8% SLOPE) FOR A MAXIMUM RISE OF 30" (762MM)

3) THE MAXIMUM VERTICAL RISE OF RAMP RUN SHALL BE 30" (762MM) MAXIMUM

4) RAMPS SHALL HAVE LANDING AT BOTTOM AND TOP OF EACH RAMP RUN

5) THE SLOPE ON LANDINGS SHALL NOT BE STEEPER THAN ONE UNIT VERTICAL IN 48 UNITS HORIZONTAL (2% SLOPE) IN ANY DIRECTION

6) LANDING SHALL HAVE A WIDTH AT LEAST AS WIDE AS THE WIDES RAMP RUN LEADING TO THE LANDING AND A MINIMUM LENGTH OF 60" IN THE DIRECTION OF TRAVEL @ TOP LANDING - 72" MIN @ BOT LANDING

7) CHANGES IN DIRECTION OF TRAVEL SHALL HAVE A LANDING 60" WIDE BY 72" LONG (1524MM x 1829MM) MINIMUM, WITH WITH THE LENGTH BEING IN THE DIRCTION OF DOWNWARD TRAVEL AND CHANGES IN DIRECTION

8) MANEUVERING CLEARANCE ON LANDING ADJACENT TO DOORWAYS SHALL BE NO LESS THAN 42" WITH DOOR IN ANY POSITION AND SHALL NOT BE REDUCED BY MORE THAN 3" WHEN DOOR IS FULLY OPENED

9) WALKING SURFACE SAHLL BE ROUGHED OR SHALL BE OF SLIP RESISTANT DIAMOND PLATE ALUMINUM AND ALL LANDINGS TO BE DESIGNED TO NOT RETAIN STANDING WATER - 2.083 MAX SLOPE ANY DIRECTION

1 *1 1/2" = 1'-0"*
Notes

Ramp Option Schedule:

option1 : ramp & landing @ building
(plan view 1/SR1)

option 2 : ramp and landing with offset ramp
(plan view 2/SR1)

option 3: ramp and platform landing
(plan view 3/SR1)

option 4 : ramp and landing with switch back ramp
(plan view 4/SR1)

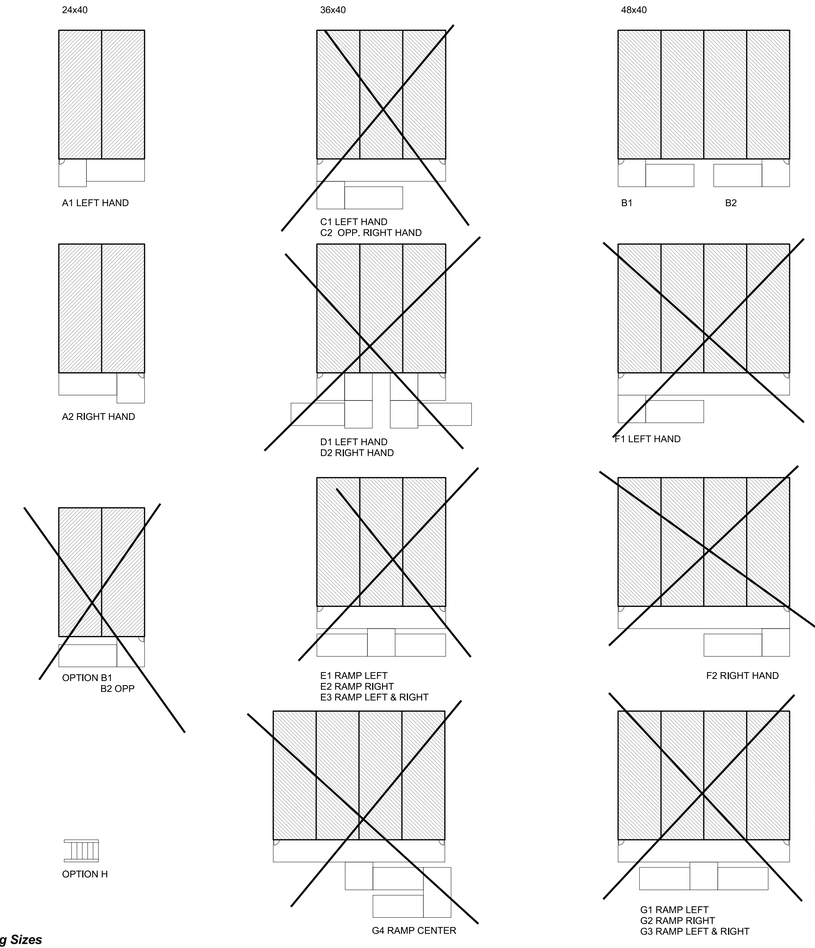

REFER TO ARCHITECTURAL SITE DRAWINGS FOR RAMP CONFIGURATION

2 ***Ramps Options w/ Different Building Sizes***

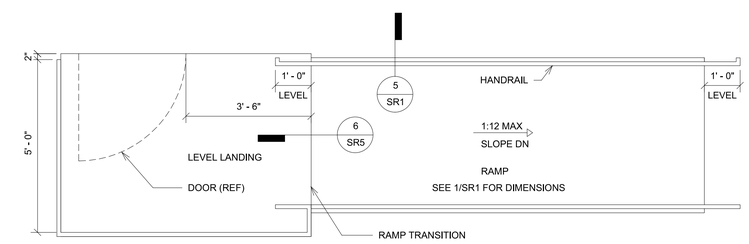

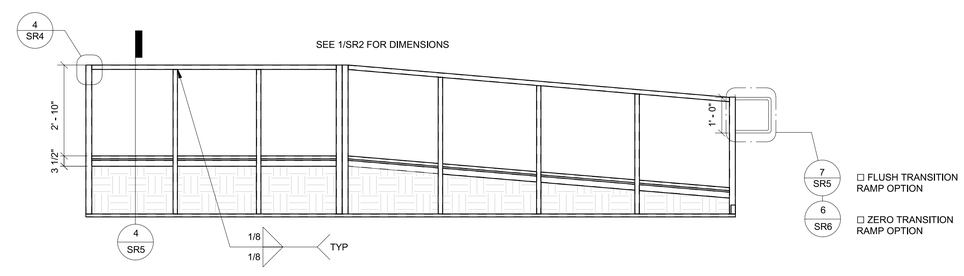

3 *1/2" = 1'-0"*
Standard Ramp

IDENTIFICATION STAMP
DIV. OF THE STATE ARCHITECT
APP: 01-119031 INC:
REVIEWED FOR
SS ☑ FLS ☑ ACS ☑
DATE: 10/22/2020

PROFESSIONAL STAMP

REGISTERED PROFESSIONAL ENGINEER
MANNY D. FRANCO
C-43801
STRUCTURAL
STATE OF CALIFORNIA

12/19/2017

THE PLANS, IDEAS & DESIGNS SHOWN ON THESE DRAWINGS ARE THE PROPERTY OF R&S TAVARES ASSOCIATES, INC. DEVISED SOLELY FOR THIS CONTRACT. THESE PLANS SHALL NOT BE USED, IN WHOLE OR IN PART, FOR ANY PURPOSE FOR WHICH THEY WERE NOT INTENDED WITHOUT THE EXPRESS WRITTEN CONSENT OF R&S TAVARES ASSOCIATES, INC. ©

CLIENT

CLASS LEASING LLC
1221 Harley Knox Boulevard

ORIGINAL PC STATE AGENCY APPROVAL
FILE NUMBER: PC-128
IDENTIFICATION STAMP
DIVISION OF THE STATE ARCHITECT
04 - 116504 INCR: 0
AC RM FLS EA SSR KER
DATE 07/19/2018

PROJECT TITLE
RAMPS PC

PRE-CHECK (PC) DOCUMENT
Code: [2016] **CBC**
A separate project application for construction is required.

PROJECT SPECIFIC STATE AGENCY

Revision Schedule

#	Description	Date

SHEET TITLE
Module Plan and Notes

PROJECT NUMBER
17016A

DRAWN BY
SM

CHECKED BY
rMc

DATE
05/04/2017

SHEET NO.
SR0

SHEET OF

12/18/2017 5:45:01 PM C:\Users\Lee\Documents\RST#17032 - Aries, Ramps and Stairs PC_Lee.rvt

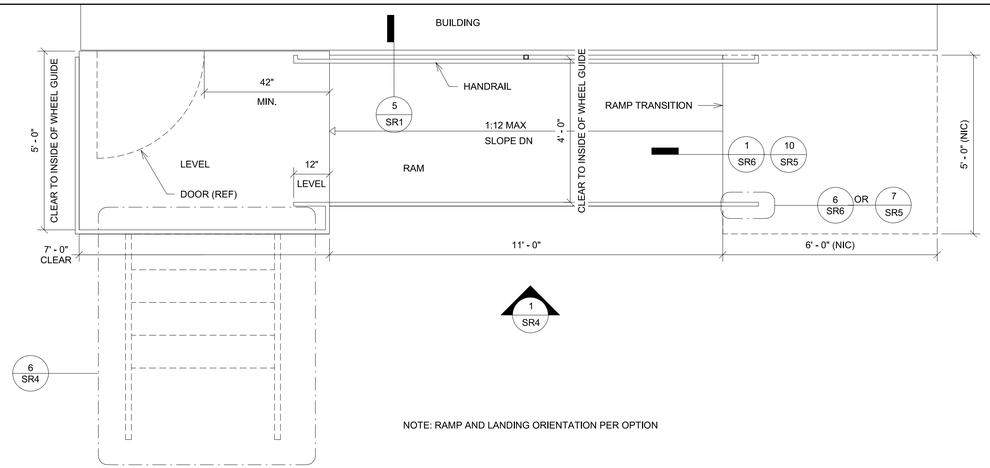

1 *1/2" = 1'-0"*
Ramp & Landing @ Building

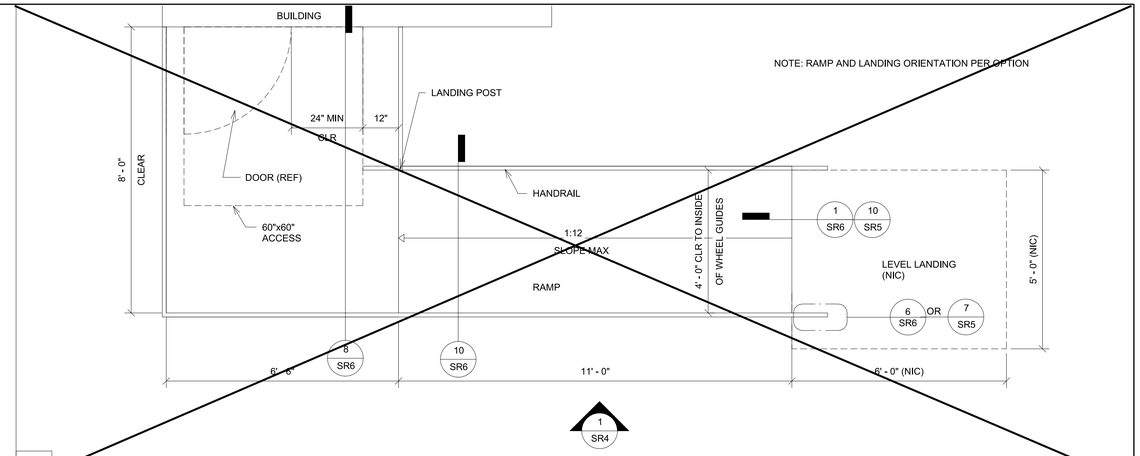

2 *1/2" = 1'-0"*
Ramp & Landing w/ Offset Ramp

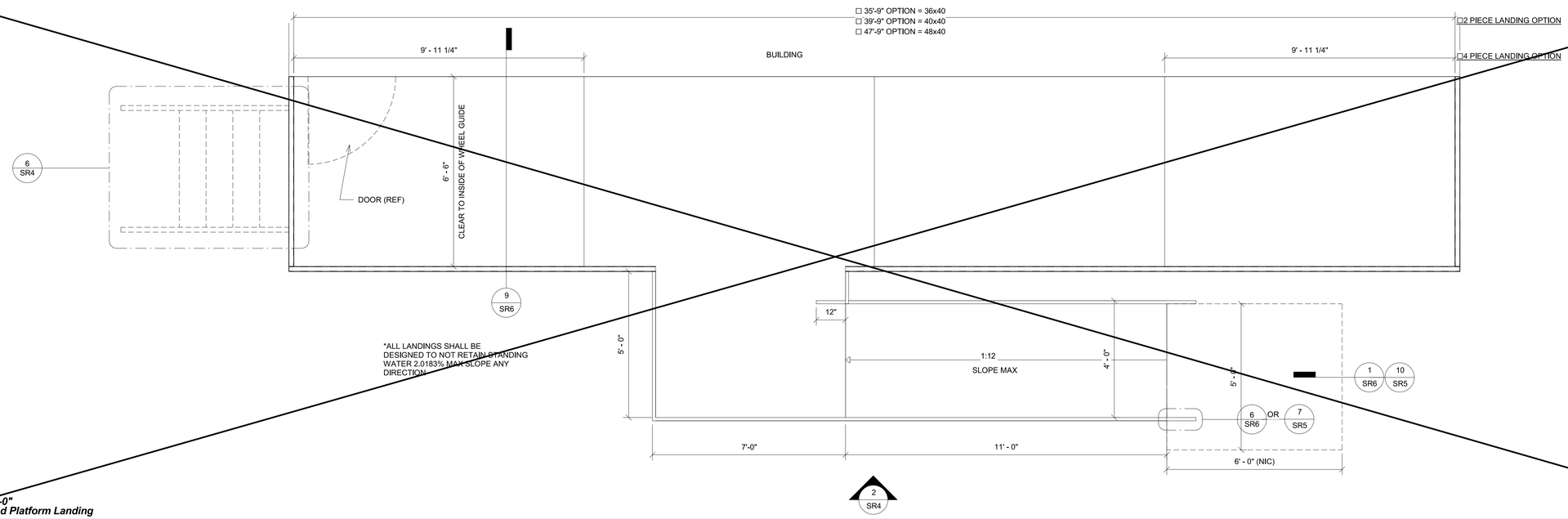

3 *1/2" = 1'-0"*
Ramp and Platform Landing

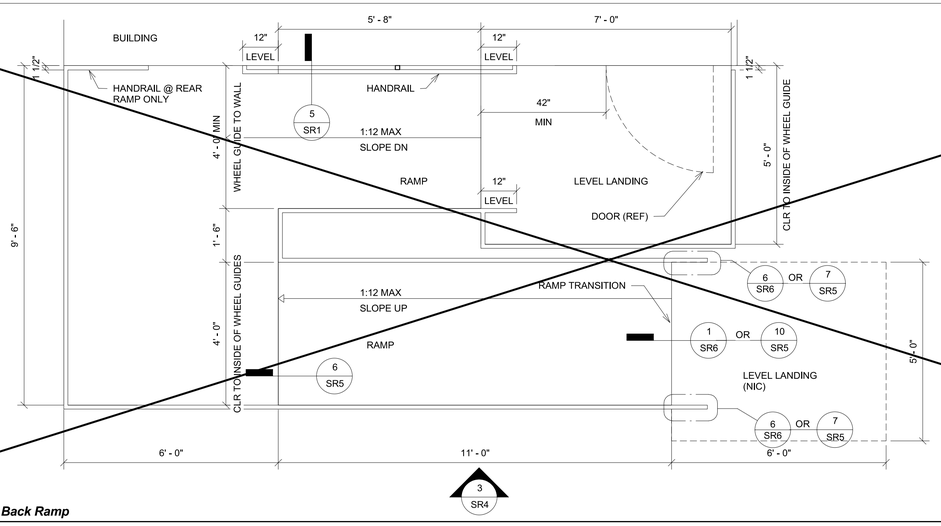

4 *1/2" = 1'-0"*
Ramp & Landing w/ Switch Back Ramp

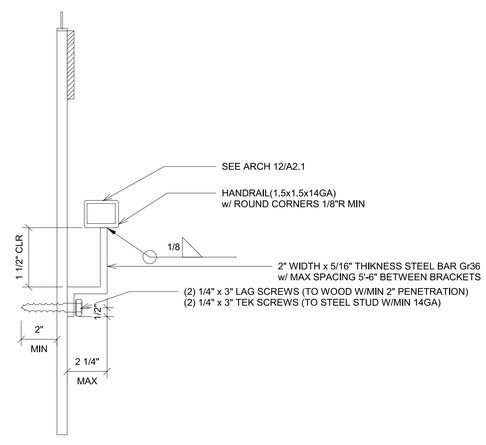

5 *3" = 1'-0"*
Handdrail

IDENTIFICATION STAMP
DIV. OF THE STATE ARCHITECT
APP: 01-119031 INC:
REVIEWED FOR
SS ☑ FLS ☑ ACS ☑
DATE: 10/22/2020

PROFESSIONAL STAMP

REGISTERED PROFESSIONAL ENGINEER
MANNY D. FRANCO
C-43801
STRUCTURAL
STATE OF CALIFORNIA

12/19/2017

THE PLANS, IDEAS & DESIGNS SHOWN ON THESE DRAWINGS ARE THE PROPERTY OF R&S TAVARES ASSOCIATES, INC. DEVISED SOLELY FOR THIS CONTRACT. THESE PLANS SHALL NOT BE USED, IN WHOLE OR IN PART, FOR ANY PURPOSE FOR WHICH THEY WERE NOT INTENDED WITHOUT THE EXPRESS WRITTEN CONSENT OF R&S TAVARES ASSOCIATES, INC. ©

CLIENT

CLASS LEASING LLC
1221 Harley Knox Boulevard

ORIGINAL PC STATE AGENCY APPROVAL
FILE NUMBER: PC-128
IDENTIFICATION STAMP
DIVISION OF THE STATE ARCHITECT
04 - 116504 INCR: 0
AC RM FLS EA SSR KER
DATE 07/19/2018

PROJECT TITLE
RAMPS PC

PRE-CHECK (PC) DOCUMENT
Code: [2016] CBC
A separate project application for construction is required.

PROJECT SPECIFIC STATE AGENCY

Revision Schedule

#	Description	Date

SHEET TITLE
Ramp and Landing Plan

PROJECT NUMBER
17016A

DRAWN BY
SM

CHECKED BY
rMc

DATE
05/04/2017

SHEET NO.
SR1

SHEET OF

12/18/2017 5:45:01 PM C:\Users\Lee\Documents\RST\#17032 - Aries, Ramps and Stairs PC_Lee.rvt

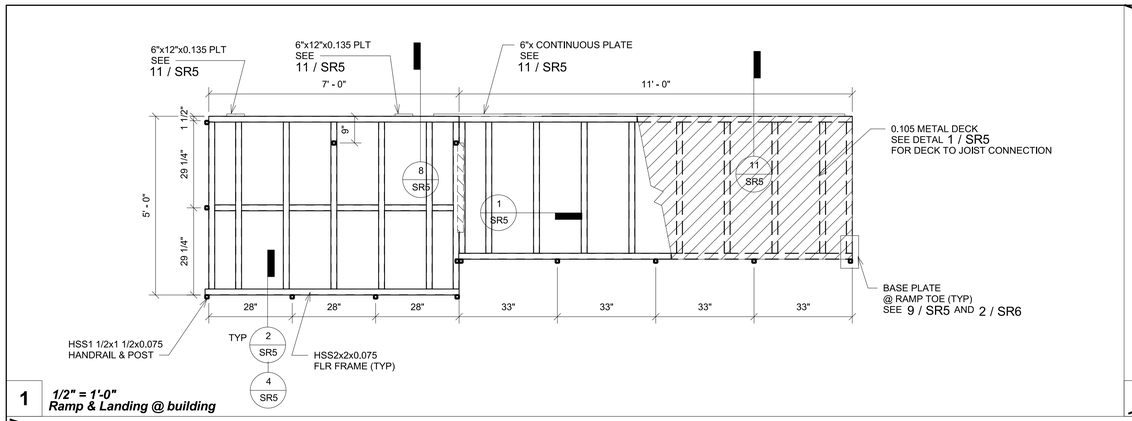

1 1/2" = 1'-0"
Ramp & Landing @ building

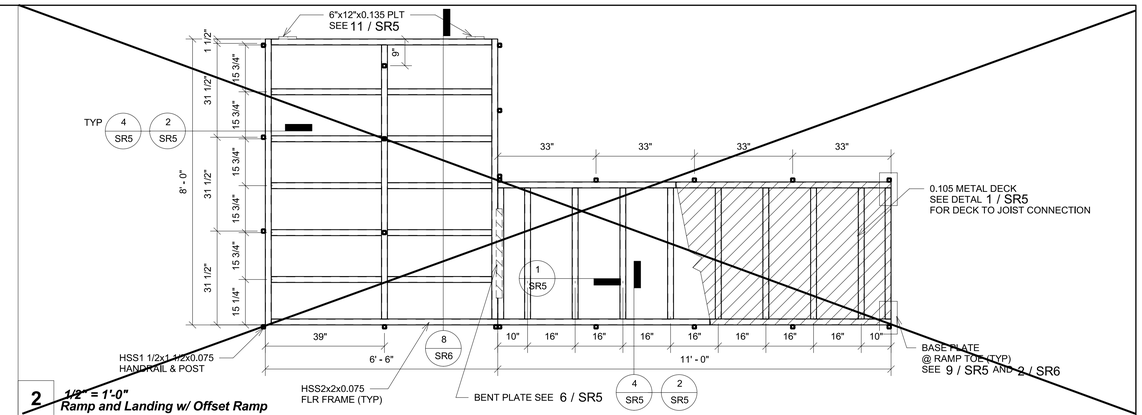

2 1/2" = 1'-0"
Ramp and Landing w/ Offset Ramp

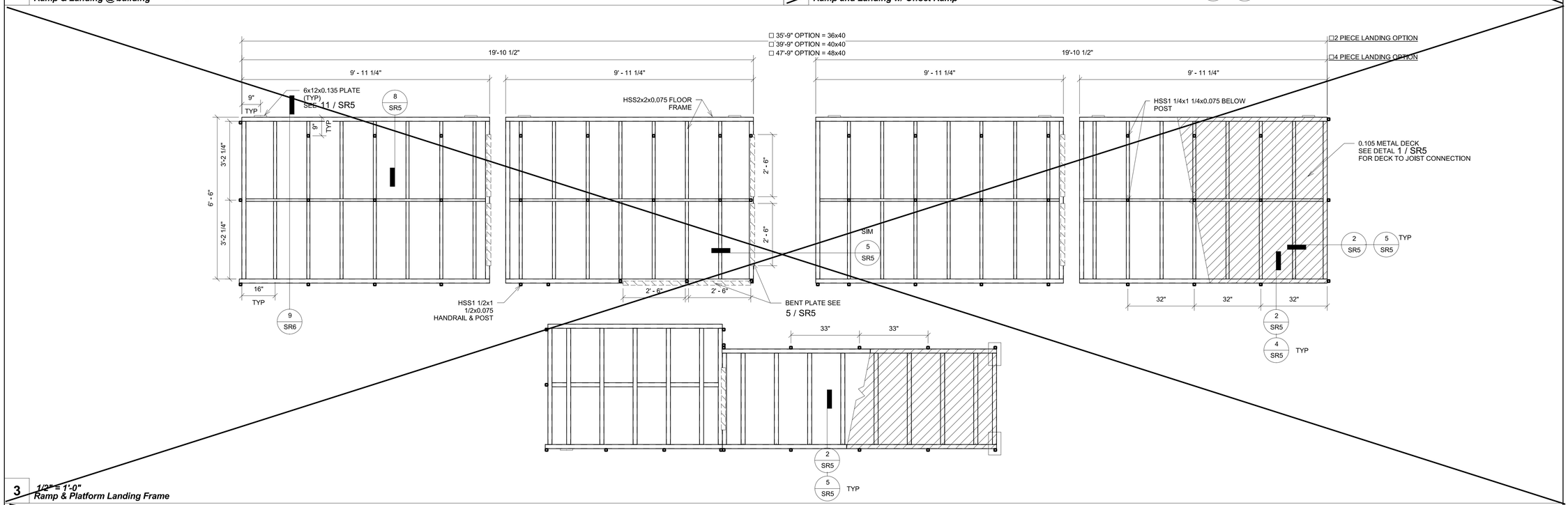

3 1/2" = 1'-0"
Ramp & Platform Landing Frame

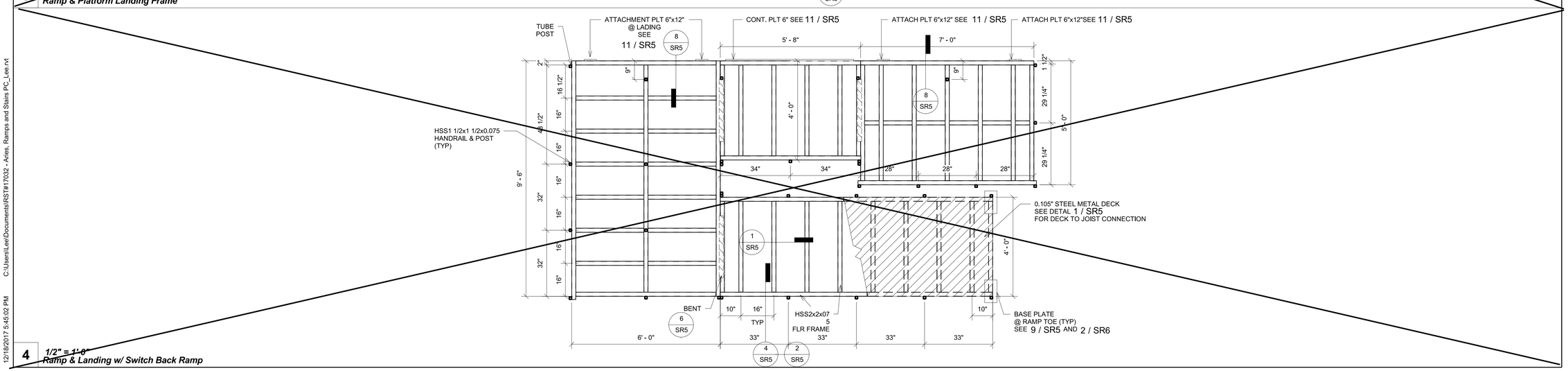

4 1/2" = 1'-0"
Ramp & Landing w/ Switch Back Ramp

IDENTIFICATION STAMP
DIV. OF THE STATE ARCHITECT
APP: 01-119031 INC:
REVIEWED FOR
SS ☑ FLS ☑ ACS ☑
DATE: 10/22/2020

PROFESSIONAL STAMP

REGISTERED PROFESSIONAL ENGINEER
MANNY D. FRIEDL
No. 53380
STRUCTURAL
STATE OF CALIFORNIA

12/19/2017

THE PLANS, IDEAS & DESIGNS SHOWN ON THESE DRAWINGS ARE THE PROPERTY OF R&S TAVARES ASSOCIATES, INC. DEVISED SOLELY FOR THIS CONTRACT. THESE PLANS SHALL NOT BE USED, IN WHOLE OR IN PART, FOR ANY PURPOSE FOR WHICH THEY WERE NOT INTENDED WITHOUT THE EXPRESS WRITTEN CONSENT OF R&S TAVARES ASSOCIATES, INC. ©

CLIENT

CLASS LEASING LLC
1221 Harley Knox
Boulevard

ORIGINAL PC STATE AGENCY APPROVAL
FILE NUMBER: PC-128
IDENTIFICATION STAMP
DIVISION OF THE STATE ARCHITECT
04 - 116504 INCR: 0
AC RM FLS EA SSR KER
DATE 07/19/2018

PROJECT TITLE
RAMPS PC

PRE-CHECK (PC) DOCUMENT
Code: [2016] CBC
A separate project application for construction is required.

PROJECT SPECIFIC STATE AGENCY

Revision Schedule

#	Description	Date

SHEET TITLE
Ramp and Landing Framing

PROJECT NUMBER
17016A

DRAWN BY
SM

CHECKED BY
BR/rMc

DATE
05/04/2017

SHEET NO.
SR2

SHEET OF

C:\Users\Lee\Documents\RST#17032 - Aries, Ramps and Stairs PC_Lee.rvt
12/18/2017 5:45:02 PM

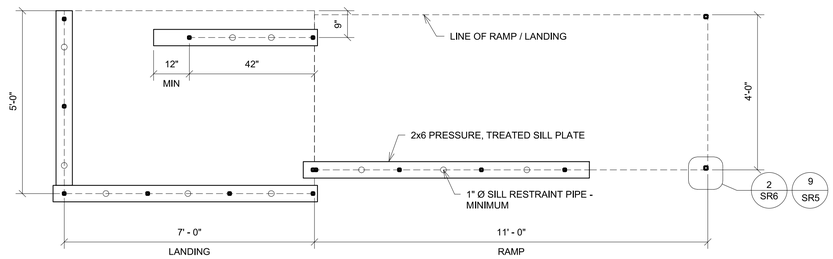

1 1/2" = 1'-0"
Sill Plan For Ramp & Landing

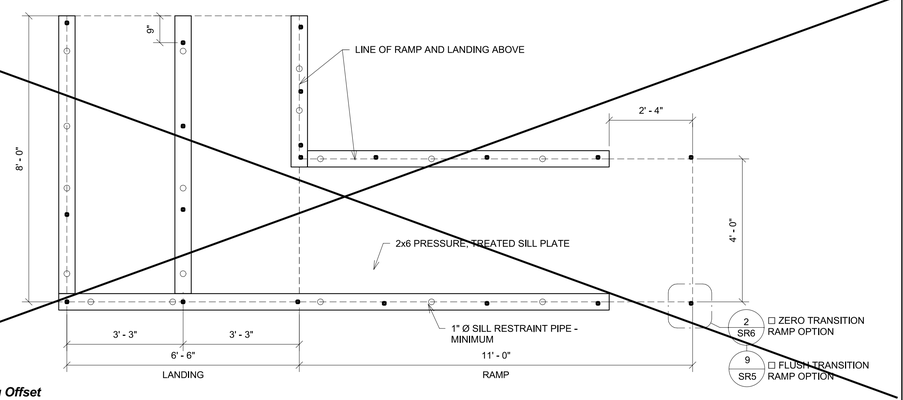

2 1/2" = 1'-0"
Sill Plan For Ramp & Landing Offset

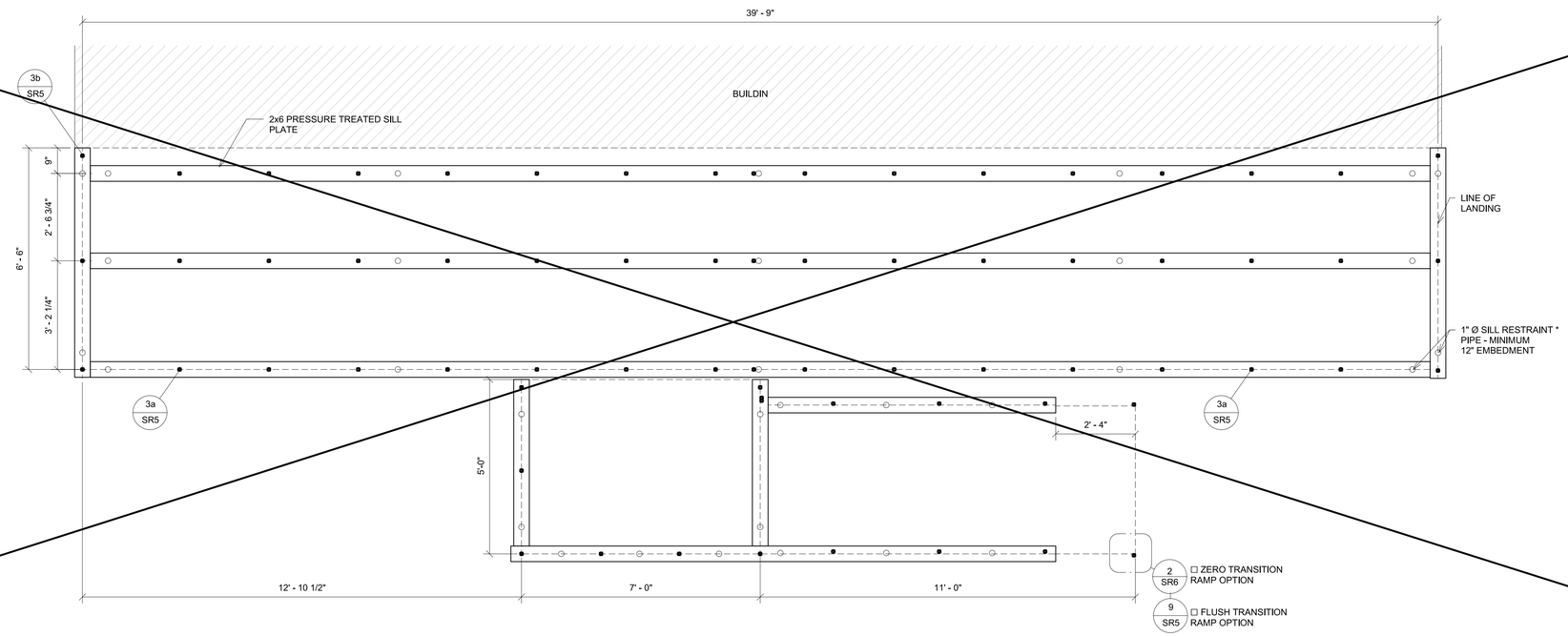

3 1/2" = 1'-0"
Platform Sill Plan For Ramp & Landing

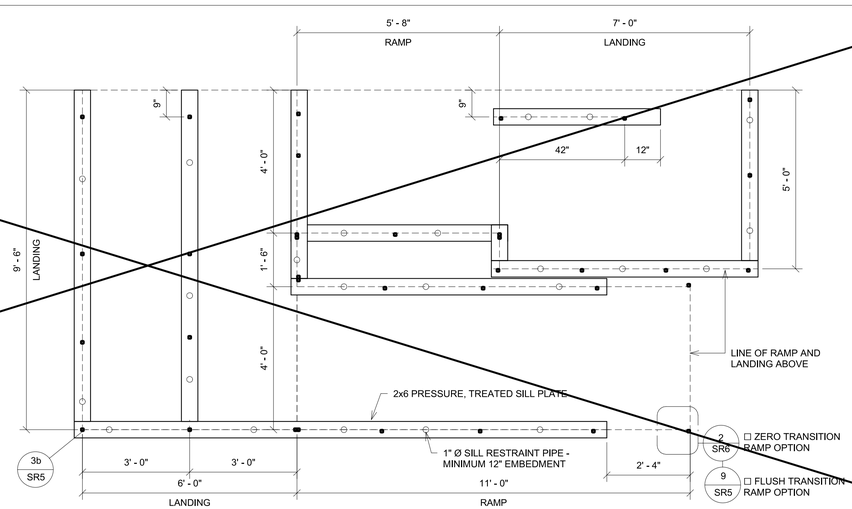

4 1/2" = 1'-0"
Sill Plan For Ramp & Landing Switchback

* "RESTRAINING PIPES / RODS SPECS"
ONE INCH DIAMETER STANDARD WEIGHT (1.315" ACTUAL 0.0) NOT DIPPED GALVANIZED PIPES OR ONE INCH DIAMETER SOLID STEEL RODS SPACED AT NOT MORE THAN 10'-0" o/c.
ONE PIPE / ROD SHALL BE LOCATED A MAXIMUM OF TWO FEET FROM EACH CORNERIN BOTH DIRECTIONS AND MINIMUM OF TWO PIPES / RODS PER DISCONTINUOUS FOUNDATION STRIP.
PIPES SHOULD PENETRATE INTO SOIL AND/OR PAVING A MIN. OF 12" MEASURED VERTICALLY.
PER DSA IR 16-1.13

IDENTIFICATION STAMP
DIV. OF THE STATE ARCHITECT
APP: 01-119031 INC:
REVIEWED FOR
SS ☑ FLS ☑ ACS ☑
DATE: 10/22/2020

PROFESSIONAL STAMP

REGISTERED PROFESSIONAL ENGINEER
MANNY D. FRIEDL
No. C-73801
STRUCTURAL
STATE OF CALIFORNIA

12/19/2017

THE PLANS, IDEAS & DESIGNS SHOWN ON THESE DRAWINGS ARE THE PROPERTY OF R&S TAVARES ASSOCIATES, INC. DEVISED SOLELY FOR THIS CONTRACT. THESE PLANS SHALL NOT BE USED, IN WHOLE OR IN PART, FOR ANY PURPOSE FOR WHICH THEY WERE NOT INTENDED WITHOUT THE EXPRESS WRITTEN CONSENT OF R&S TAVARES ASSOCIATES, INC. ©

CLIENT

CLASS LEASING LLC
1221 Harley Knox
Boulevard

ORIGINAL PC STATE AGENCY APPROVAL
FILE NUMBER: PC-128
IDENTIFICATION STAMP
DIVISION OF THE STATE ARCHITECT
04 - 116504 INCR: 0
AC RM FLS EA SSR KER
DATE 07/19/2018

PROJECT TITLE
RAMPS PC

PRE-CHECK (PC) DOCUMENT
Code: [2016] CBC
A separate project application for construction is required.

PROJECT SPECIFIC STATE AGENCY

Revision Schedule

#	Description	Date

SHEET TITLE
Foundation Plan

PROJECT NUMBER
17016A

DRAWN BY
SM

CHECKED BY
rMc

DATE
05/04/2017

SHEET NO.
SR3

SHEET OF

12/18/2017 5:45:03 PM C:\Users\Lee\Documents\RST#17032 - Aries, Ramps and Stairs PC_Lee.rvt

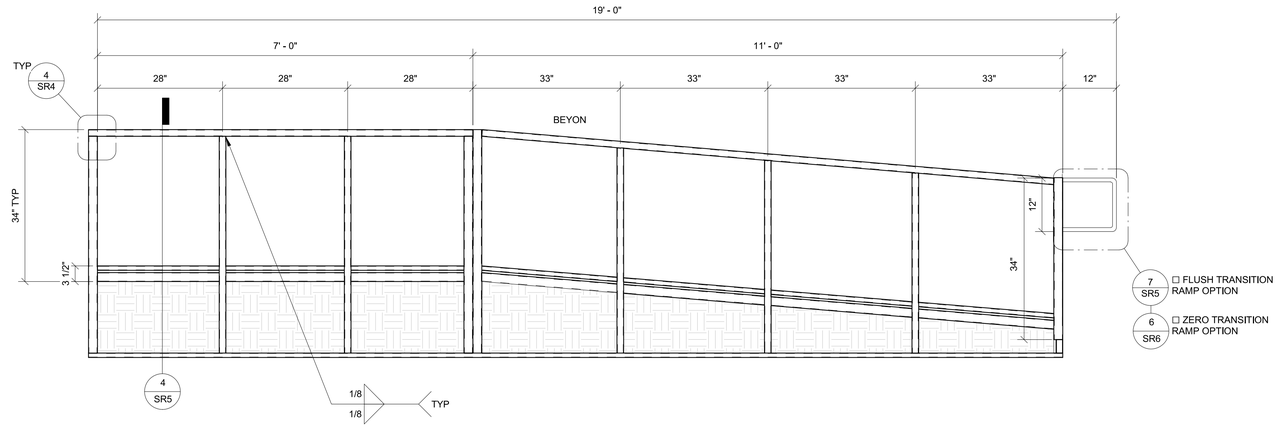

1 *3/4" = 1'-0"*
Ramp & Landing Elevation

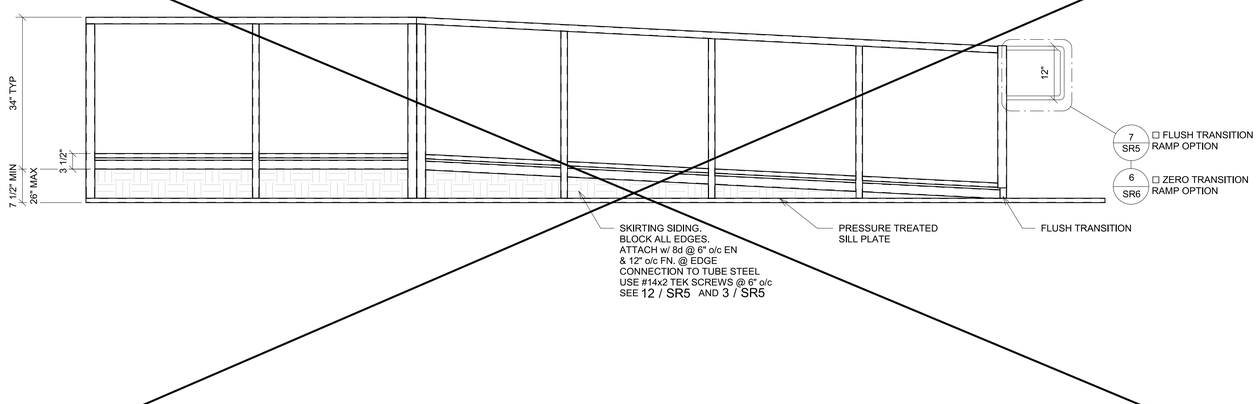

2 *3/4" = 1'-0"*
Ramp & Landing Elevation Option X Copy 1

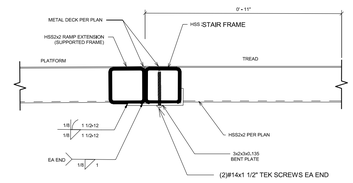

5 *3" = 1'-0"*
Conn @ Platform

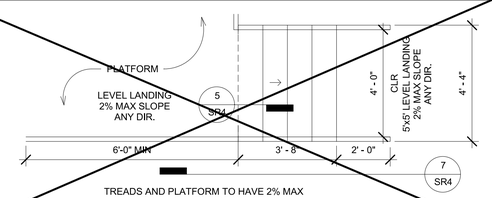

6 *3/8" = 1'-0"*
Stair

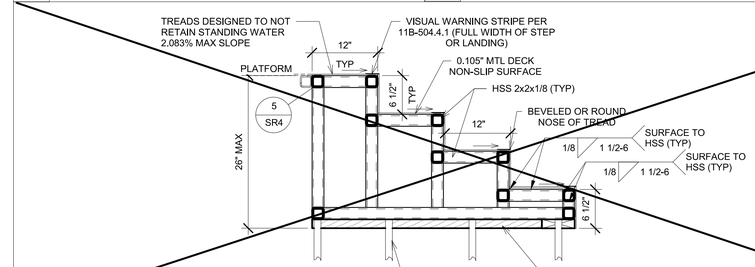

7 *1" = 1'-0"*
Stair Elev

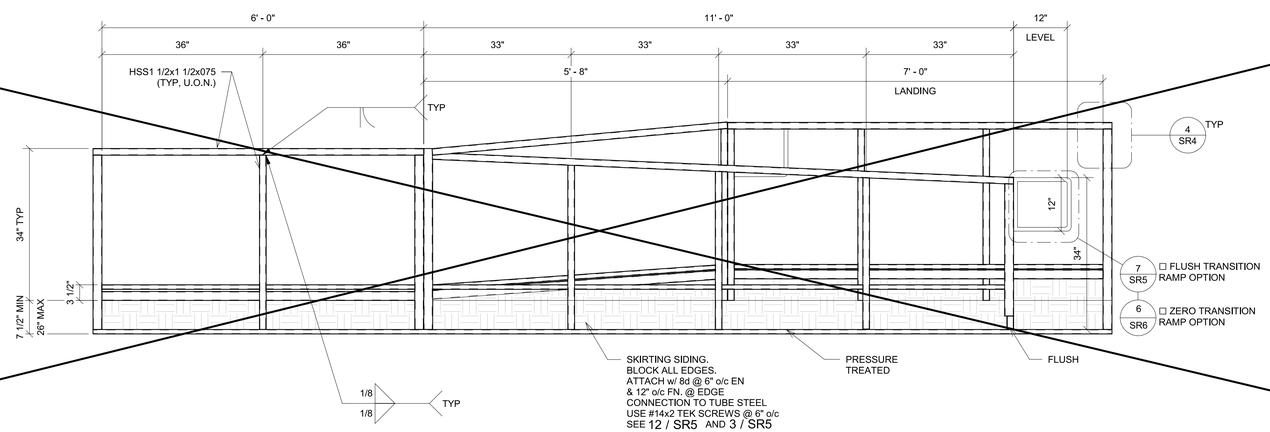

3 *3/4" = 1'-0"*
Ramp & Landing Elevation Option X

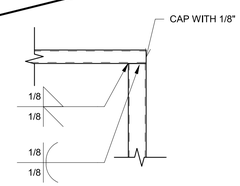

4 *1 1/2" = 1'-0"*
Ramp & Landing Elevation Option X1 - Callout 1

C:\Users\Lee\Documents\RST#17032 - Aries, Ramps and Stairs PC_Lee.rvt

12/18/2017 6:19:03 PM

IDENTIFICATION STAMP
DIV. OF THE STATE ARCHITECT
APP: 01-119031 INC:
REVIEWED FOR
SS ☑ FLS ☑ ACS ☑
DATE: 10/22/2020

PROFESSIONAL STAMP

REGISTERED PROFESSIONAL ENGINEER
MANNY D. FRANCISCO
C-23804
STRUCTURAL
STATE OF CALIFORNIA

12/19/2017

THE PLANS, IDEAS & DESIGNS SHOWN ON THESE DRAWINGS ARE THE PROPERTY OF R&S TAVARES ASSOCIATES, INC. DEVISED SOLELY FOR THIS CONTRACT. THESE PLANS SHALL NOT BE USED, IN WHOLE OR IN PART, FOR ANY PURPOSE FOR WHICH THEY WERE NOT INTENDED WITHOUT THE EXPRESS WRITTEN CONSENT OF R&S TAVARES ASSOCIATES, INC. ©

CLIENT

CLASS LEASING LLC

1221 Harley Knox
Boulevard

ORIGINAL PC STATE AGENCY APPROVAL
FILE NUMBER: PC-128

IDENTIFICATION STAMP
DIVISION OF THE STATE ARCHITECT
04 - 116504 INCR: 0
AC RM FLS EA SSR KER
DATE 07/19/2018

PROJECT TITLE

RAMPS PC

PRE-CHECK (PC) DOCUMENT
Code: [2016] **CBC**
A separate project application for construction is required.

PROJECT SPECIFIC STATE AGENCY

Revision Schedule

#	Description	Date

SHEET TITLE

Ramp and Landing / Stair Framing Elevation

PROJECT NUMBER
17016A

DRAWN BY
SM

CHECKED BY
rMc

DATE
05/04/2017

SHEET NO.
SR4

SHEET OF

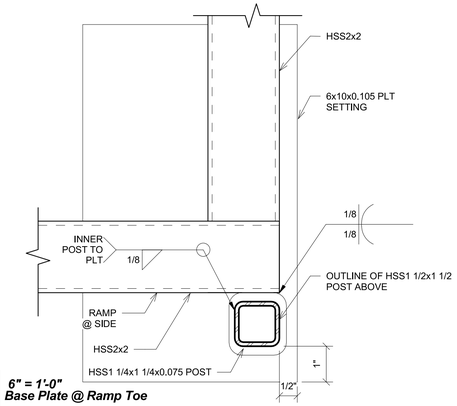

9 *6" = 1'-0"*
Base Plate @ Ramp Toe

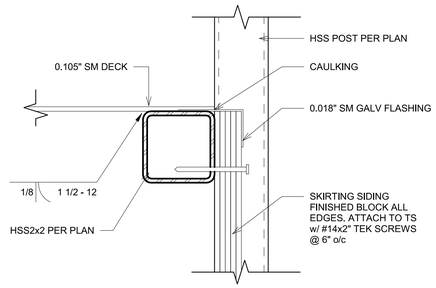

12 *6" = 1'-0"*
Skirt Flashing

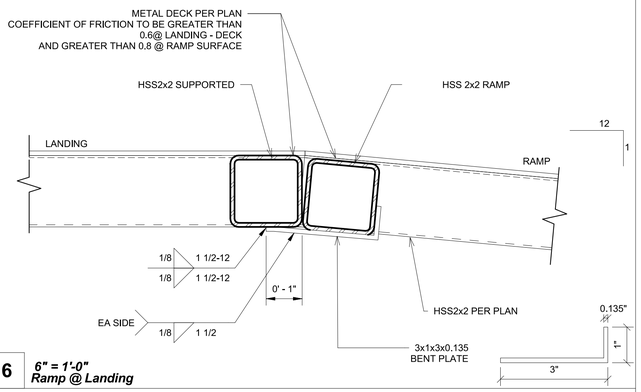

6 *6" = 1'-0"*
Ramp @ Landing

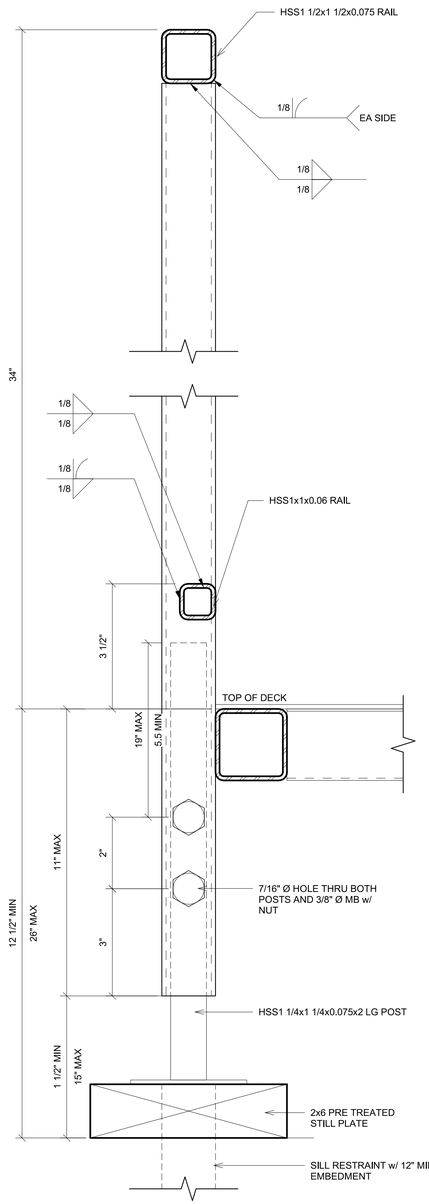

2 *6" = 1'-0"*
Adjustable Leg

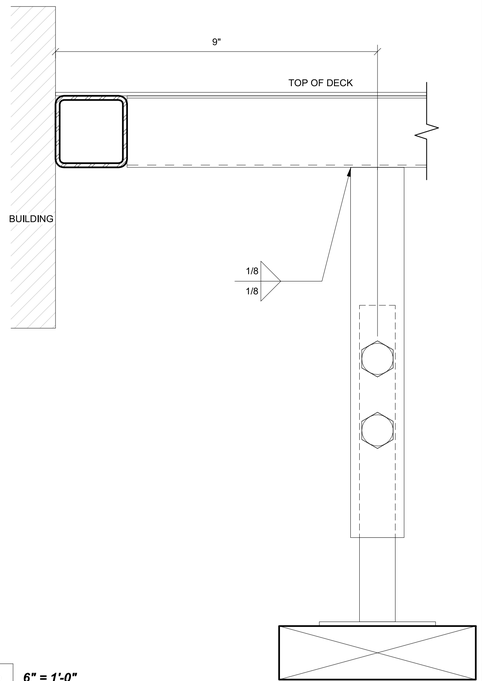

8 *6" = 1'-0"*
Interior Landing Leg Section

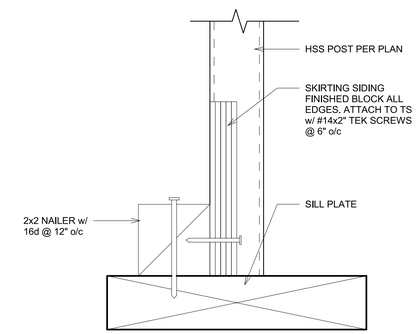

3 *6" = 1'-0"*
Skirt Flashing @ Sill Plate

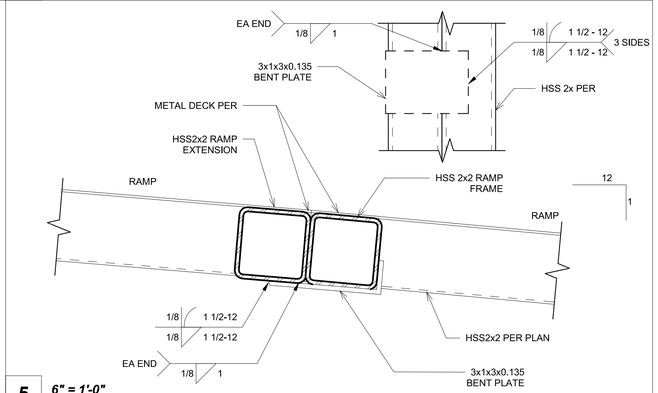

5 *6" = 1'-0"*
Ramp Extension

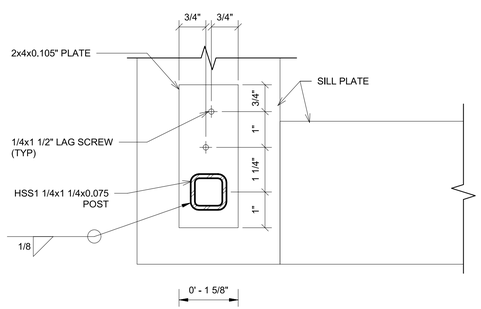

3b *6" = 1'-0"*
Adjustable Leg Base Plate

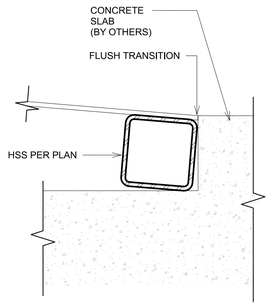

10 *6" = 1'-0"*
Flush Transition @ Bottom of Ramp

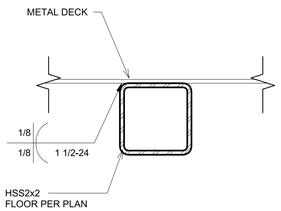

1 *6" = 1'-0"*
Deck to Frame

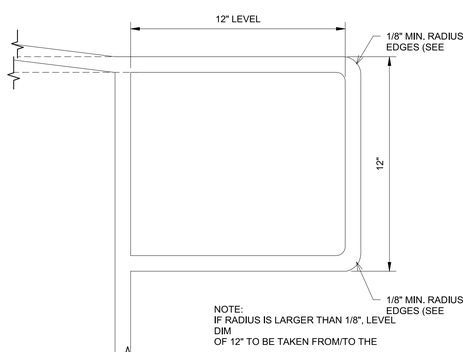

7 *3" = 1'-0"*
Extend Handrail @ Top or Bott. Ends

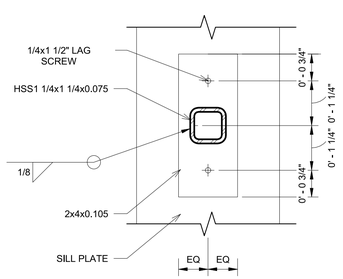

3a *6" = 1'-0"*
Adjustable Leg Plate

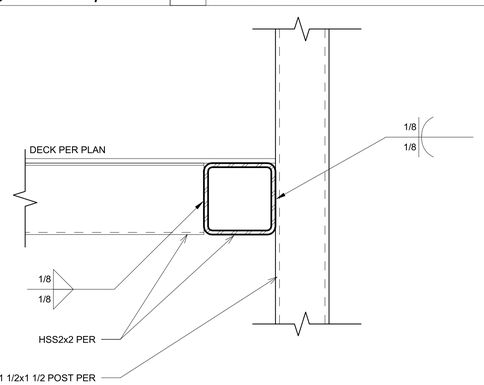

4 *6" = 1'-0"*
Guardrail post Attachment

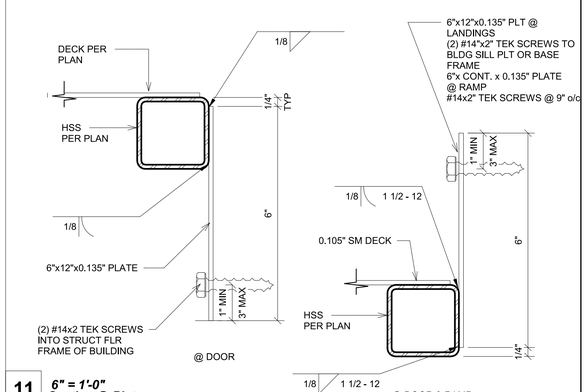

11 *6" = 1'-0"*
Section @ Plate

IDENTIFICATION STAMP
DIV. OF THE STATE ARCHITECT
APP: 01-119031 INC:
REVIEWED FOR
SS ☑ FLS ☑ ACS ☑
DATE: 10/22/2020

PROFESSIONAL STAMP

REGISTERED PROFESSIONAL ENGINEER
MANNY D. FRANCO
C-34380
STRUCTURAL
STATE OF CALIFORNIA

12/19/2017

THE PLANS, IDEAS & DESIGNS SHOWN ON THESE DRAWINGS ARE THE PROPERTY OF R&S TAVARES ASSOCIATES, INC. DEVISED SOLELY FOR THIS CONTRACT. THESE PLANS SHALL NOT BE USED, IN WHOLE OR IN PART, FOR ANY PURPOSE FOR WHICH THEY WERE NOT INTENDED WITHOUT THE EXPRESS WRITTEN CONSENT OF R&S TAVARES ASSOCIATES, INC. ©

CLIENT

CLASS LEASING LLC
1221 Harley Knox Boulevard

ORIGINAL PC STATE AGENCY APPROVAL
FILE NUMBER: PC-128
IDENTIFICATION STAMP
DIVISION OF THE STATE ARCHITECT
04 - 116504 INCR: 0
AC RM FLS EA SSR KER
DATE 07/19/2018

PROJECT TITLE
RAMPS PC

PRE-CHECK (PC) DOCUMENT
Code: [2016] **CBC**
A separate project application for construction is required.

PROJECT SPECIFIC STATE AGENCY

Revision Schedule

#	Description	Date

SHEET TITLE
Ramp Details

PROJECT NUMBER
17016A

DRAWN BY
SM

CHECKED BY
rMc

DATE
05/04/2017

SHEET NO.
SR5

SHEET OF

12/18/2017 5:45:05 PM C:\Users\Lee\Documents\RST#17032 - Aries, Ramps and Stairs PC_Lee.rvt

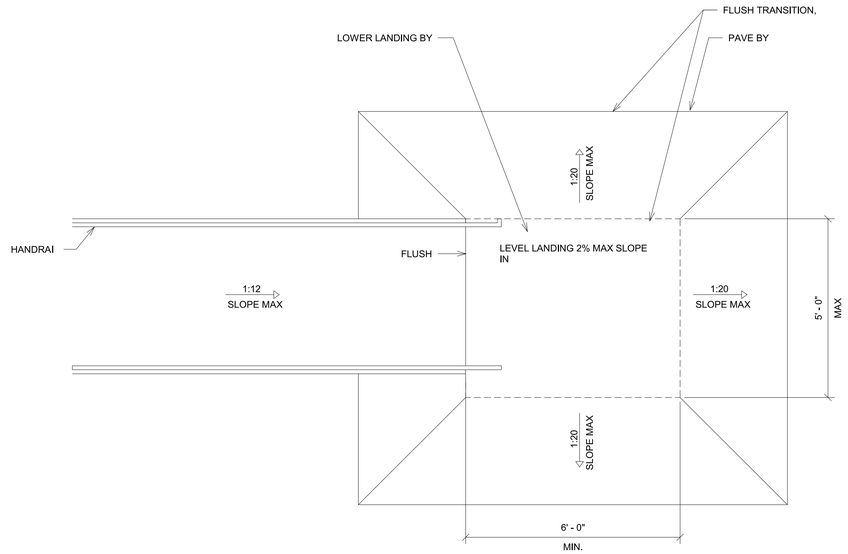

NOTE:
1. 1:20 TRANSITION OFF OF LOWER LANDING REQUIRES NO HANDRAIL.
2. TRANSITIONS EXCEEDING 1:20 BUT NOT EXCEED 1:12 REQUIRE REMOVAL OF 12" HANDRAIL EXTENSION AND ADDITIONAL HANDRAILING BY DISTRICT. (THIS CONDITION REQUIRES A SITE SPECIFIC DETAIL PROVIDED BY ARCHITECT TO DEMOSTRATE ACCESSIBLE RAMP)

7 *1/2" = 1'-0"*
Ramp Transition

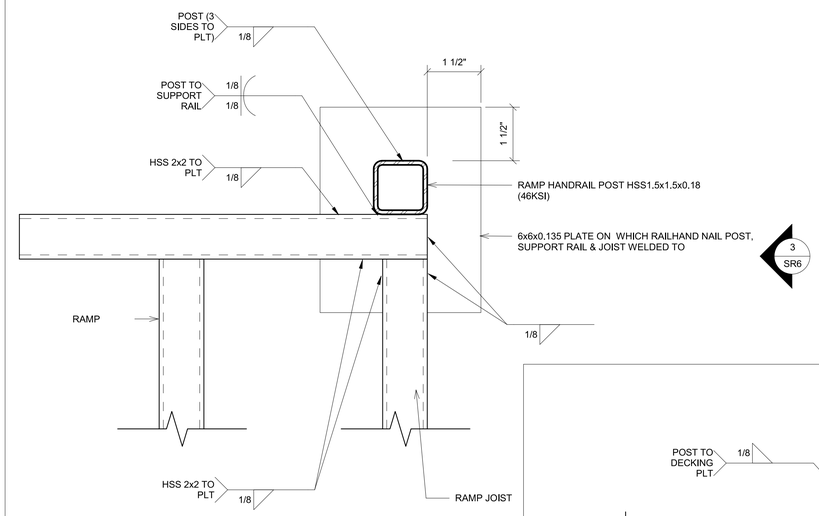

2 *6" = 1'-0"*
Base Plt @ Ramp Toe For Zero Transition

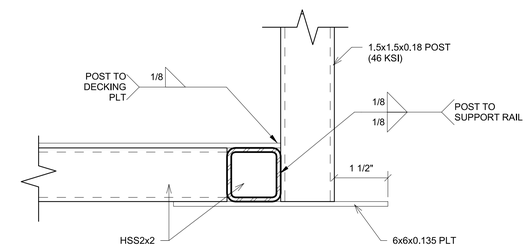

3 *6" = 1'-0"*
Base Plt @ Ramp Toe Low Zero Side View

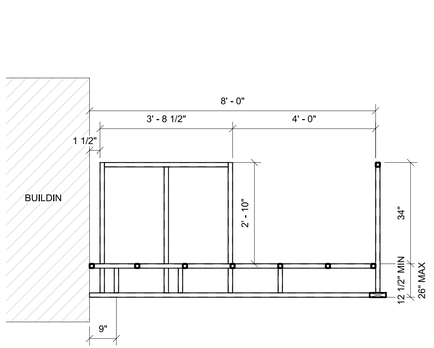

8 *1/2" = 1'-0"*
Section @ Landing

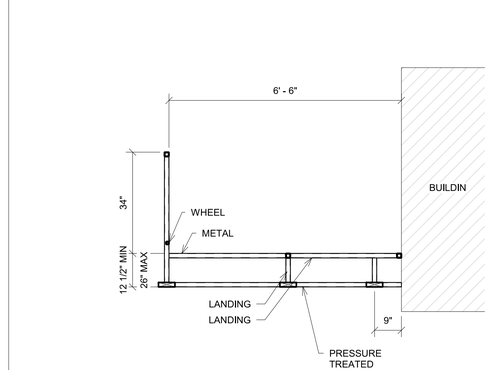

9 *1/2" = 1'-0"*
Section @ Landing Copy 1

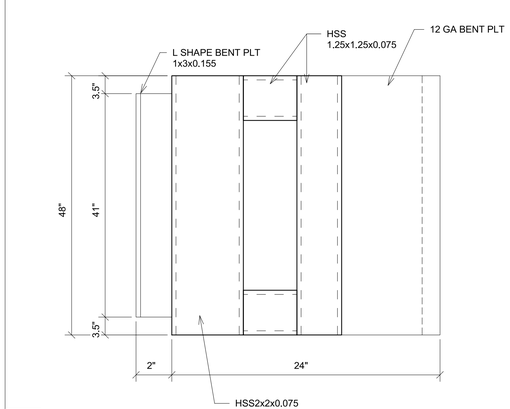

4 *6" = 1'-0"*
Top View Ramp Zero Transition

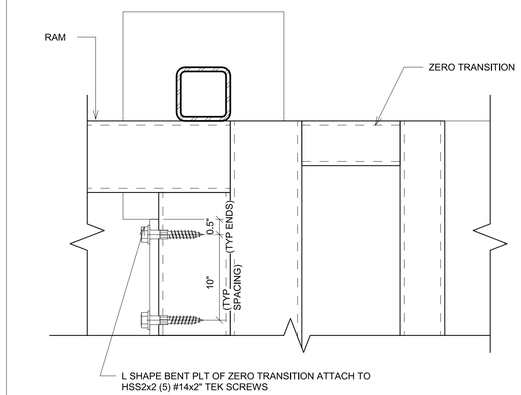

5 *6" = 1'-0"*
Zero Transition Ramp Connection

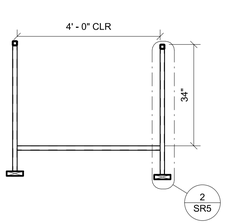

10 *1/2" = 1'-0"*
Section @ Ramp

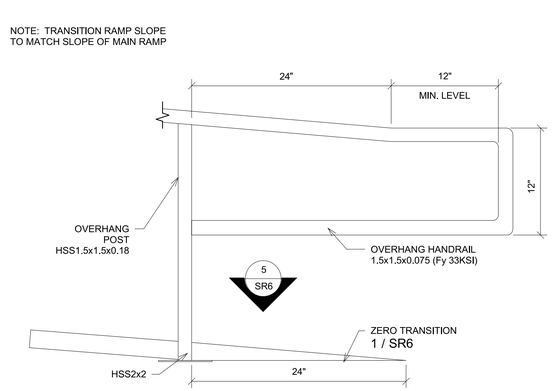

6 *1 1/2" = 1'-0"*
Extend Handrail @ Bottom End For Zero Transition Ramp

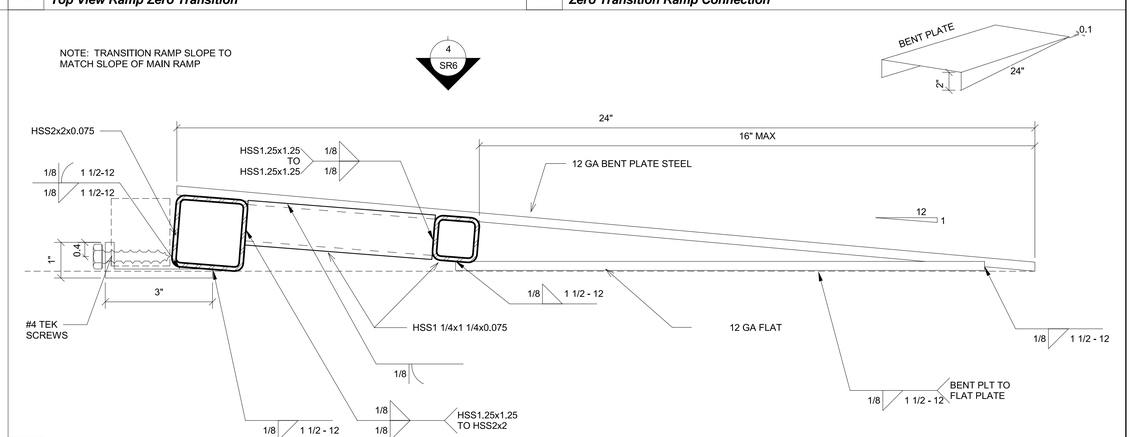

1 *6" = 1'-0"*
Zero Transition Ramp

IDENTIFICATION STAMP
DIV. OF THE STATE ARCHITECT
APP: 01-119031 INC:
REVIEWED FOR
SS ☑ FLS ☑ ACS ☑
DATE: 10/22/2020

PROFESSIONAL STAMP

REGISTERED PROFESSIONAL ENGINEER
MANNY D. FRANCO
C-43801
STRUCTURAL
STATE OF CALIFORNIA

12/19/2017

THE PLANS, IDEAS & DESIGNS SHOWN ON THESE DRAWINGS ARE THE PROPERTY OF R&S TAVARES ASSOCIATES, INC. DEVISED SOLELY FOR THIS CONTRACT. THESE PLANS SHALL NOT BE USED, IN WHOLE OR IN PART, FOR ANY PURPOSE FOR WHICH THEY WERE NOT INTENDED WITHOUT THE EXPRESS WRITTEN CONSENT OF R&S TAVARES ASSOCIATES, INC. ©

CLIENT

CLASS LEASING LLC
1221 Harley Knox Boulevard

ORIGINAL PC STATE AGENCY APPROVAL
FILE NUMBER: PC-128
IDENTIFICATION STAMP
DIVISION OF THE STATE ARCHITECT
04 - 116504 INCR: 0
AC RM FLS EA SSR KER
DATE 07/19/2018

PROJECT TITLE
RAMPS PC

PRE-CHECK (PC) DOCUMENT
Code: [2016] **CBC**
A separate project application for construction is required.

PROJECT SPECIFIC STATE AGENCY

Revision Schedule

#	Description	Date

SHEET TITLE
Ramp Details

PROJECT NUMBER
17016A

DRAWN BY
SM

CHECKED BY
rMc

DATE
05/04/2017

SHEET NO.
SR6

SHEET OF

12/19/2017 5:45:06 PM C:\Users\Lee\Documents\RST#17032 - Aries, Ramps and Stairs PC_Lee.rvt

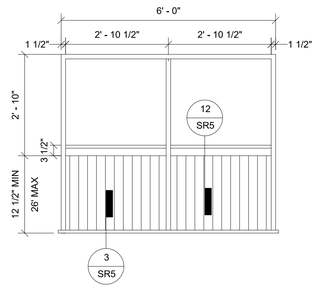

1 *1/2" = 1'-0"*
LANDING ELEVATION VIEW

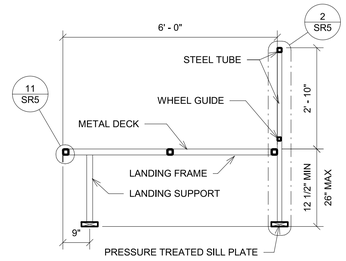

2 *1/2" = 1'-0"*
LANDING SECTION

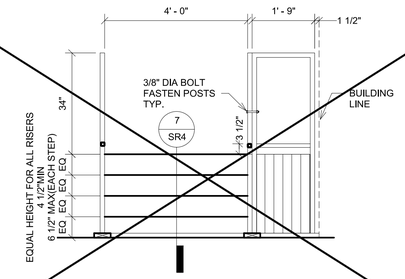

6 *1/2" = 1'-0"*
STEPS ELEVATION

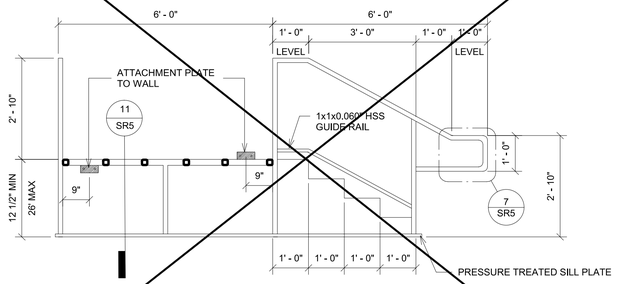

3 *1/2" = 1'-0"*
STEP AND LANDING SECTION

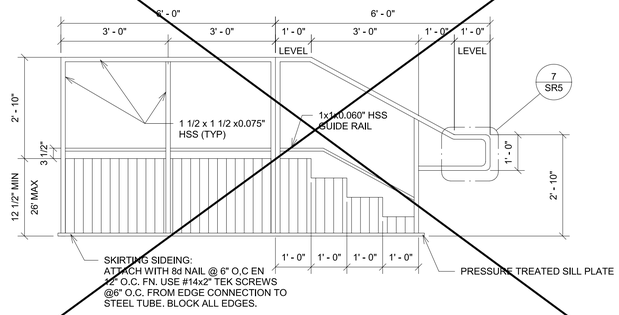

4 *1/2" = 1'-0"*
STEPS AND LANDING SECTION

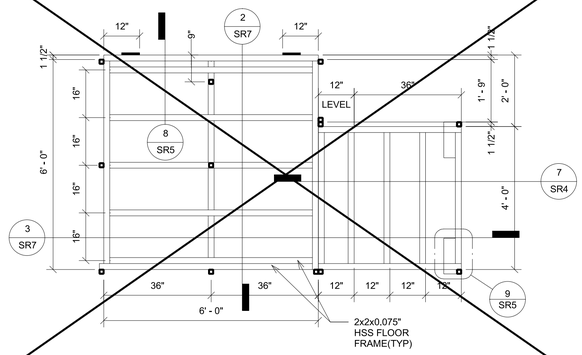

5 *1/2" = 1'-0"*
STEPS/LANDING FRAMING PLAN

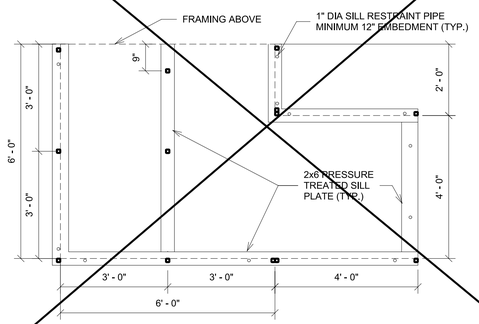

7 *1/2" = 1'-0"*
SILL PLAN

IDENTIFICATION STAMP
DIV. OF THE STATE ARCHITECT
APP: 01-119031 INC:
REVIEWED FOR
SS ☑ FLS ☑ ACS ☑
DATE: 10/22/2020

PROFESSIONAL STAMP

REGISTERED PROFESSIONAL ENGINEER
MANNY D. FRANCO
C-43801
STRUCTURAL
STATE OF CALIFORNIA

12/19/2017

THE PLANS, IDEAS & DESIGNS SHOWN ON THESE DRAWINGS ARE THE PROPERTY OF R&S TAVARES ASSOCIATES, INC. DEVISED SOLELY FOR THIS CONTRACT. THESE PLANS SHALL NOT BE USED, IN WHOLE OR IN PART, FOR ANY PURPOSE FOR WHICH THEY WERE NOT INTENDED WITHOUT THE EXPRESS WRITTEN CONSENT OF R&S TAVARES ASSOCIATES, INC. ©

CLIENT

CLASS LEASING LLC

1221 Harley Knox
Boulevard

ORIGINAL PC STATE AGENCY APPROVAL
FILE NUMBER: PC-128

IDENTIFICATION STAMP
DIVISION OF THE STATE ARCHITECT
04 - 116504 INCR: 0
AC_RM_ FLS_EA_ SSR_KER
DATE 07/19/2018

PROJECT TITLE

RAMPS PC

PRE-CHECK (PC) DOCUMENT
Code: [2016] **CBC**
A separate project application for construction is required.

PROJECT SPECIFIC STATE AGENCY

Revision Schedule

#	Description	Date

SHEET TITLE

Stair Conn

PROJECT NUMBER
17016A

DRAWN BY
rMc

CHECKED BY
BR

DATE
05/04/2017

SHEET NO.
SR7

SHEET OF

12/18/2017 5:45:07 PM C:\Users\Lee\Documents\RST#17032 - Aries, Ramps and Stairs PC_Lee.rvt

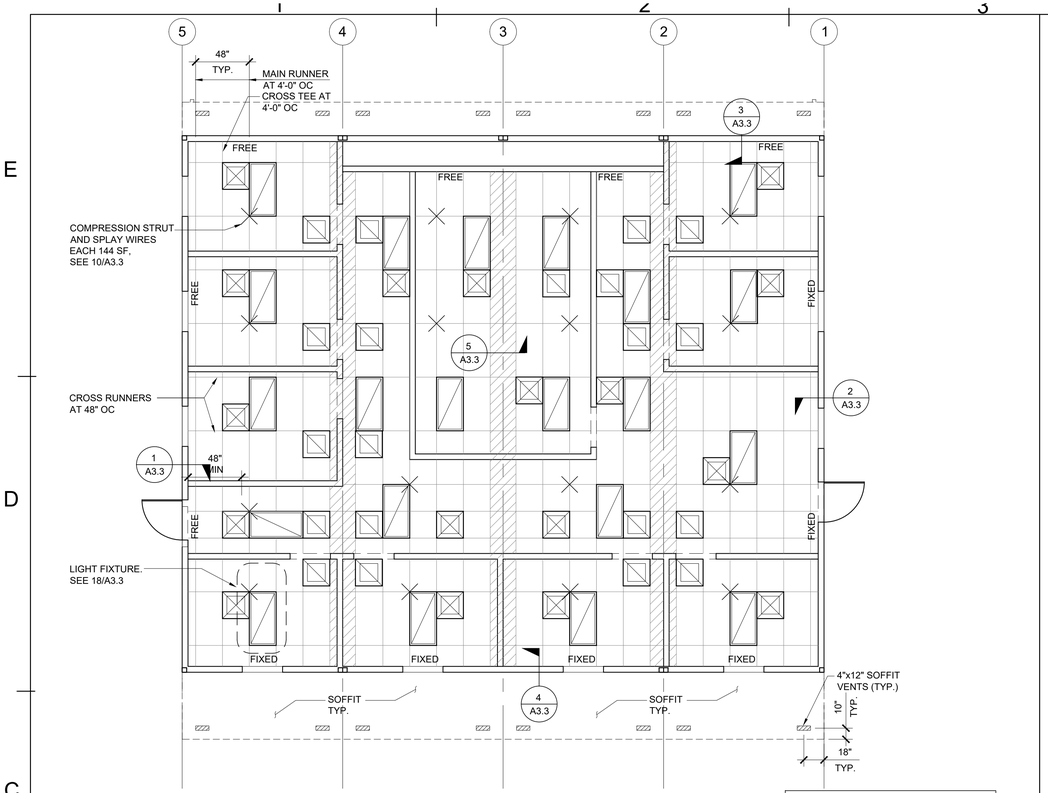

REFERENCE PC SHEET A3.2

REF.: DSA A# - } REFLECTED CEILING PLAN SCALE: 3/16" = 1'-0" 2

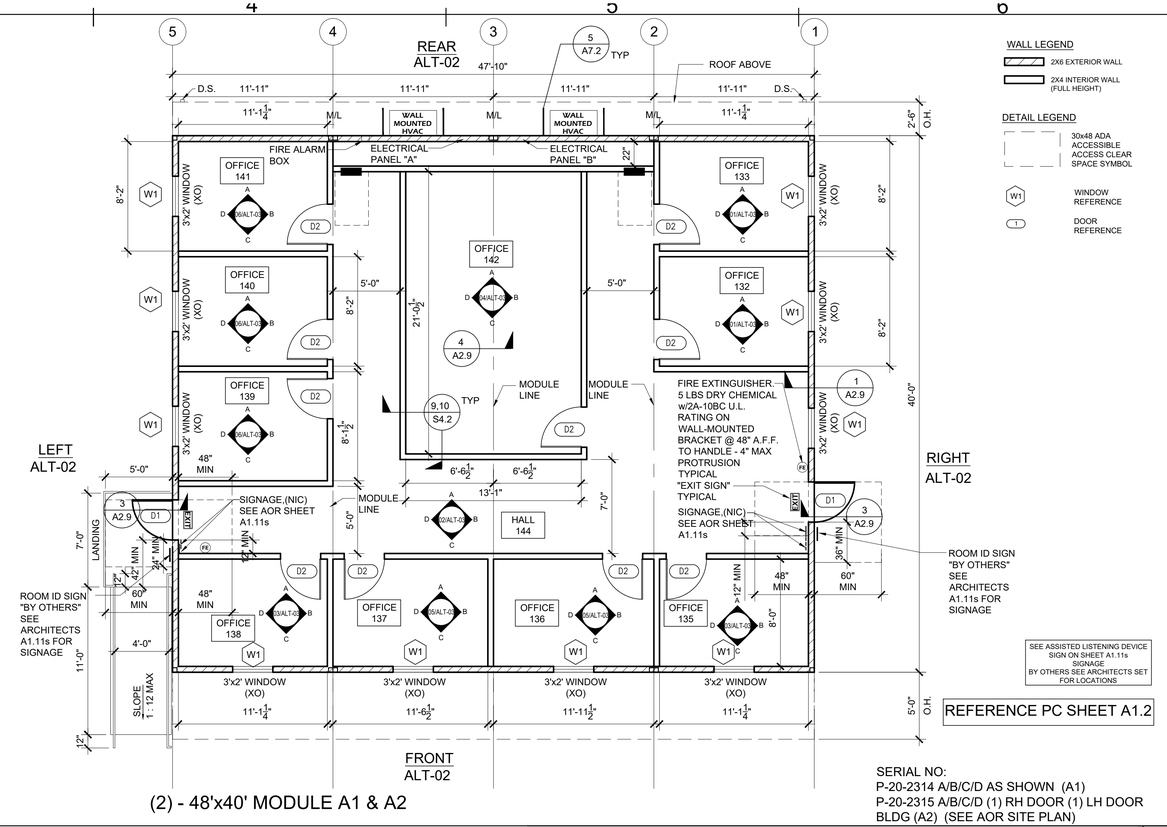

WALL LEGEND
- 2X6 EXTERIOR WALL
- 2X4 INTERIOR WALL (FULL HEIGHT)

DETAIL LEGEND
- 30x48 ADA ACCESSIBLE ACCESS CLEAR SPACE SYMBOL
- W1 WINDOW REFERENCE
- 1 DOOR REFERENCE

SEE ASSISTED LISTENING DEVICE SIGN ON SHEET A1.11s SIGNAGE BY OTHERS SEE ARCHITECTS SET FOR LOCATIONS

REFERENCE PC SHEET A1.2

(2) - 48'x40' MODULE A1 & A2

SERIAL NO:
P-20-2314 A/B/C/D AS SHOWN (A1)
P-20-2315 A/B/C/D (1) RH DOOR (1) LH DOOR
BLDG (A2) (SEE AOR SITE PLAN)

REF.: DSA A# - } FLOOR PLAN SCALE: 3/16" = 1'-0" 1

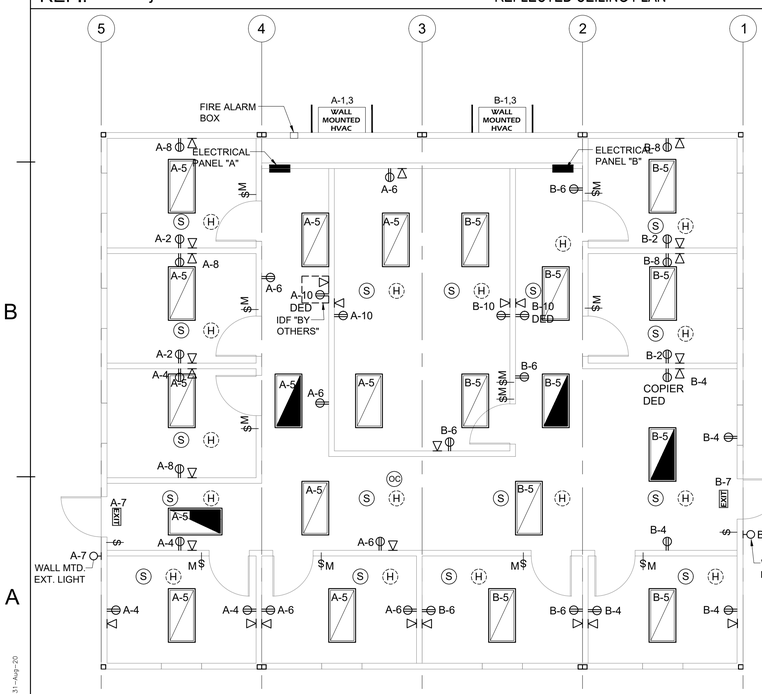

PANEL: A	PHASE:		VOLTS:		BUSS:		MAIN:				LOCATION:		FEED:				MOUNTING:
S/N:	SINGLE		120/240		125 AMP		125 AMP				INTERIOR		REAR				RECESSED
OBJECT DESCRIPTION	WATTS PER	NO. OF	LCL	WATTS A	WATTS B	BRK	POLE	WIRE SIZE	CKT NO	CKT A	CKT B	CKT NO	WIRE SIZE	POLE	BRK	WATTS A	WATTS B	LCL	NO OF	WATTS PER	OBJECT DESCRIPTION
4 TON A/C	5428	1	x	5428		20	1	#12	1	X		2	#12	1	20	360		x	3	180	RECEPTS DUPLEX
4 TON A/C	5428	1	x		5428	20	1	#12	3		X	4	#12	1	20		720	x	4	180	RECEPTS DUPLEX
LIGHTS 2x4(LED)	70	11	x	770		20	1	#12	5	X		6	#12	1	20	900		x	5	180	RECEPTS DUPLEX
EXIT/EXTERIOR LTS	60	2	x		120	20	1	#12	7		X	8	#12	1	20		1500	x	3	500	RECEPT DUPLEX-DATA
				0					9	X		10	#12	1	20	1000		x	2	500	RECEPT DUPLEX-DATA
					0				11		X	12	#12	1	20		40	x	1	40	FIRE ALARM
LEG TOTALS				6198	5548											2320	2320	LEG TOTALS			

LCL=4066.5+16266=20332.5
TOTAL WATTS=20332.5 — LEG BALANCE = 4.0% — TOTAL AMPS: 84.72

PANEL: B	PHASE:		VOLTS:		BUSS:		MAIN:				LOCATION:		FEED:				MOUNTING:
S/N:	SINGLE		120/240		125 AMP		125 AMP				INTERIOR		REAR				RECESSED
OBJECT DESCRIPTION	WATTS PER	NO. OF	LCL	WATTS A	WATTS B	BRK	POLE	WIRE SIZE	CKT NO	CKT A	CKT B	CKT NO	WIRE SIZE	POLE	BRK	WATTS A	WATTS B	LCL	NO OF	WATTS PER	OBJECT DESCRIPTION
4 TON A/C	5428	1	x	5428		20	1	#12	1	X		2	#12	1	20	540		x	3	180	RECEPTS DUPLEX
4 TON A/C	5428	1	x		5428	20	1	#12	3		X	4	#12	1	20		720	x	4	180	RECEPTS DUPLEX
LIGHTS 2x4(LED)	70	10	x	700		20	1	#12	5	X		6	#12	1	20	900		x	5	180	RECEPTS DUPLEX
EXIT/EXTERIOR LTS	60	2	x		120	20	1	#12	7		X	8	#12	1	20		1500	x	3	500	RECEPT DUPLEX-DATA
				0					9	X		10	#12	1	20	500		x	1	500	RECEPT DUPLEX-DATA
					0				11		X	12					0				
LEG TOTALS				6128	5548											1940	2220	LEG TOTALS			

LCL=3959+15836=19795
TOTAL WATTS=19795 — LEG BALANCE = 1.9% — TOTAL AMPS: 82.48

ELECTRICAL LEGEND

MOUNTING HEIGHTS PER 11B-308.1.1 , SWITCHES PER 11B-308.1.2

- 2x4 CEILING LIGHT WITH (3) T-8 LAMPS, LAY-IN FLUORESCENT LIGHT FIXTURE WITH DIMMABLE BALLAST ORACLE LIGHTING MODEL: 24-OT-3-32-T8-EMG-T8-BX-450-A12-L41K-C4 WATTAGE: 79W (3 LAMPS/32W/T8) OR EQUAL. EACH LIGHT FIXTURE WHICH IS INDICATED AS BEING AN EMERGENCY LIGHT SHALL HAVE A BALLAST BATTERY PACK INSTALLED ON THE FIXTURE. THE BATTERY PACK SHALL PROVIDE POWER TO A SINGLE LAMP WITHIN THE FIXTURE FOR NO LESS THAN 90 MINUTES. ANY LIGHT FIXTURE EQUIPPED WITH A BATTERY PACK SHALL BE WIRED IN SUCH A MANNER THAT THE BATTERY WILL BE ACTIVATED IMMEDIATELY UPON LOSS OF POWER TO THE FIXTURE. ADDITIONALLY THE BATTERY PACK SHALL BE OPERATED USING BATTERY POWER.LIGHTING CONTROL SWITCHES AND SENSORS SHALL NOT BE ABLE TO SHUT THE FIXTURE OFF.
- 2x4 CEILING LIGHT WITH (3) T-8 LAMPS, LAY-IN FLUORESCENT LIGHT FIXTURE WITH ELECTRONIC BALLAST
- 1x4 CEILING LIGHT, LAY-IN FLUORESCENT LIGHT FIXTURE WITH ELECTRONIC BALLAST
- ELECTRICAL PANEL AT +60" AFF TO TOP OF PANEL WITH 1-1/2" DIA POWER STUB OUT
- $ LIGHT SWITCH. MOUNT AT +48" AFF TO TOP OF DEVICE (11b-308.1.1)
- $M MOTION LIGHT SWITCH. MOUNT AT +48" AFF TO TOP OF DEVICE (11B-308.1.1)
- SSD J-BOX FOR FUTURE DATA- 1-1/4" CO STUB INTO ATTIC WITH PULLSTRING.
- 4SD J-BOX FOR FIRE ALARM PULLSTATION (DEVICE BY OTHERS). MOUNT AT +48" AFF TO PULL HANDLE OF DEVICE WITH 3/4" CONDUIT TO FIRE ALARM STROBE WITH PULLSTRING
- 4SD J-BOX FOR FIRE ALARM STROBE/HORN (DEVICE BY OTHERS). MOUNT AT +80" AFF TO BOTTOM OF DEVICE WITH 3/4" CONDUIT TO EXTERIOR FIRE ALARM HORN WITH PULLSTRING
- OC CEILING MOUNTED OCCUPANCY SENSOR WATTSTOPPER #LMPC-100 OR EQUAL
- EXIT EXIT SIGN WITH BATTERY BACK UP. EXIT SIGN REQUIRED FOR CLASSROOMS WITH TWO OR MORE EXTERIOR DOORS (CLASSROOMS WITH ONE EXTERIOR DOOR - OPTIONAL)
- RECESSED 4SD J-BOX W / COVER PLATE FOR FUTURE FIRE ALARM SYSTEM BY OTHERS. MOUNT AT +18" AFF U.O.N. TO CENTERLINE OF BOX AND PROVIDE 1" CO STUB TO ATTIC SPACE WITH PULLSTRING
- DUPLEX (WALL MOUNTED) RECEPTACLE 15A - 125V - 3 WIRE. MOUNT AT +18" AFF U.O.N. TO CENTERLINE OF DEVICE
- QUAD PLEX (WALL MOUNTED) RECEPTACLE 15A - 125V - 3 WIRE. MOUNT AT +18" AFF U.O.N. TO CENTERLINE OF DEVICE
- DUPLEX (CEILING MOUNTED) RECEPTACLE 15A - 125V - 3 WIRE.
- EXTERIOR LIGHT FIXTURE. MOUNT AT +93" AFF
- EH 4SD J-BOX FOR EXTERIOR FIRE ALARM HORN (DEVICE BY OTHERS). MOUNT AT +96" AFF TO CENTERLINE OF DEVICE WITH 3/4" CONDUIT TO FIRE ALARM BACKBOX WITH PULLSTRING
- S SMOKE DETECTOR 4-SD J-BOX ONLY - IN CEILING
- H HEAT DETECTOR 4-SD J-BOX ONLY
- SP CEILING MOUNTED SPEAKER
- CEILING MOUNTED DATA OUTLET
- WALL MOUNTED TELEPHONE OUTLET @ +18" A.F.F. UON
- PC CEILING MOUNTED PHOTOCELL, WATTSTOPPER #LMLS-500 OR EQUAL
- C CARBON MONOXIDE PER CBC SECTION 915
- CLOCK MOUNTED AT 90" A.F.F.
- FLOOR MOUNTED QUAD OUTLET & DATA

REFERENCE PC SHEET E1.4

REF.: DSA A# - } ELECTRICAL PLAN SCALE: 3/16" = 1'-0" 4

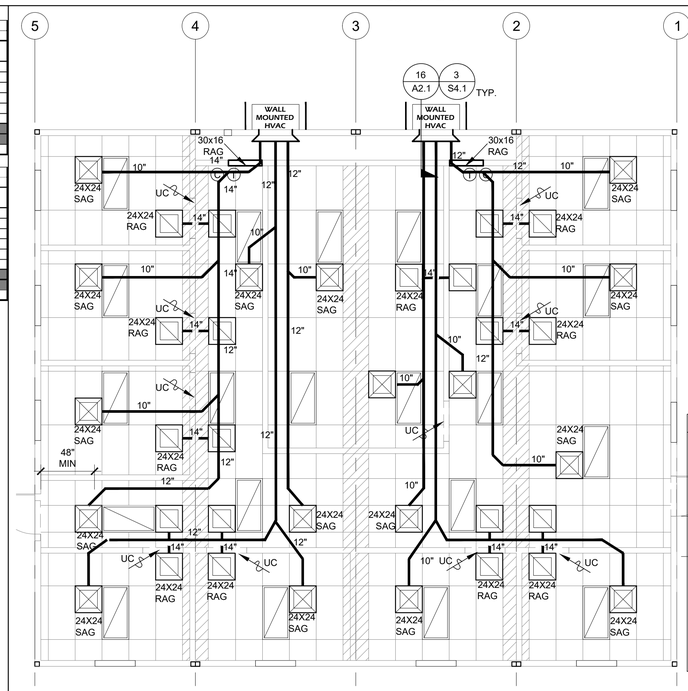

MECHANICAL LEGEND
- SUPPLY DUCT
- RETURN DUCT
- NUMBER INDICATES DUCT SIZE
- SUPPLY REGISTER WITH INTEGRAL DAMPER
- RETURN REGISTER
- EXHAUST FAN
- T THERMOSTAT (TOP OF THERMOSTAT +48" AFF)
- C CARBON MONOXIDE SENSOR
- UNDERCUT DOOR

REFERENCE PC SHEET M7.1

REF.: DSA A# - } MECHANICAL PLAN SCALE: 3/16" = 1'-0" 3

IDENTIFICATION STAMP
DIV. OF THE STATE ARCHITECT
APP: 01-119031 INC:
REVIEWED FOR
SS ☑ FLS ☑ ACS ☑
DATE: 10/22/2020

REVISIONS	BY
1	
2	
3	
4	
5	
6	
7	
8	

Class L Leasing
1320 W. Oleander Ave. Perris, CA 92571-7408
VOICE (951)943-1908 FAX (951)943-5768

ENGINEER

REGISTERED PROFESSIONAL ENGINEER Manny D. Farsch No. S3380 STRUCTURAL STATE OF CALIFORNIA
08/31/2020

AOR

48'x40' OFFICE BUILDING A1 & A2

SHEET TITLE:

DATE: 08-28-2020

DRAWN BY: ELMER / BERNNIE

SCALE: AS SHOWN

JOB:

SHEET NO: ALT-01

Plot by/Date/Time : Bernnie 31-Aug-20

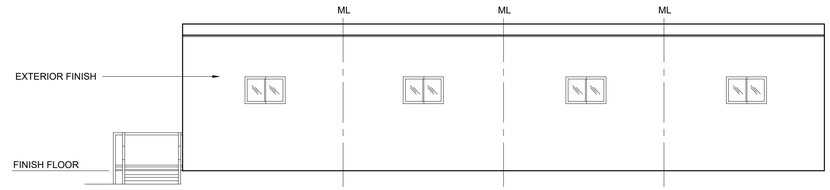

FRONT

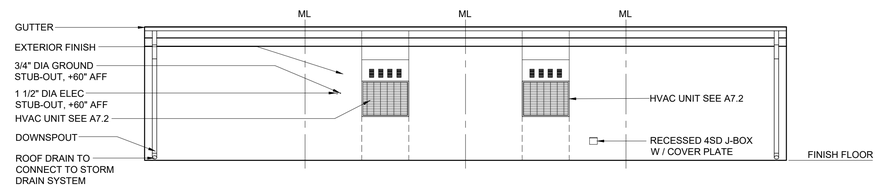

REAR

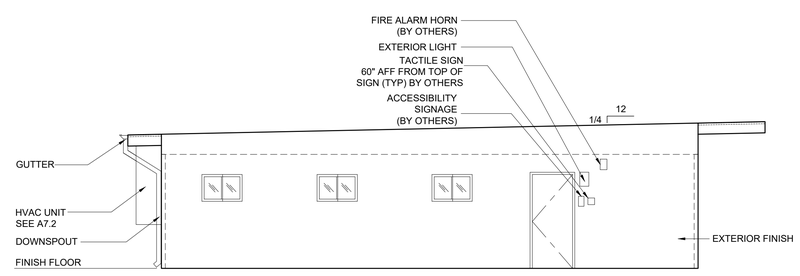

LEFT

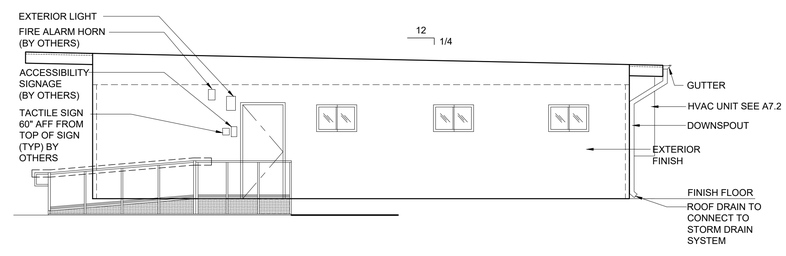

RIGHT

REFERENCE PC SHEET A5.0

REF.: DSA A#- }

EXTERIOR ELEVATIONS

SCALE: 3/16" = 1'-0" | 1

IDENTIFICATION STAMP
DIV. OF THE STATE ARCHITECT
APP: 01-119031 INC:
REVIEWED FOR
SS ☑ FLS ☑ ACS ☑
DATE: 10/22/2020

REVISIONS	BY
1	
2	
3	
4	
5	
6	
7	
8	

Class L Leasing
1320 W. Oleander Ave. Perris, CA 92571-7408
VOICE (951)943-1908 FAX (951)943-5768

ENGINEER

REGISTERED PROFESSIONAL ENGINEER
MANNY D. FARCH
No. S3380
STRUCTURAL
STATE OF CALIFORNIA

08/31/2020

AOR

48'x40' OFFICE
BUILDING A1 & A2

SHEET TITLE:

DATE: 08-28-2020

DRAWN BY: ELMER / BERNNIE

SCALE: AS SHOWN

JOB:

SHEET NO: ALT-02

Plot by/Date/Time : Bernnie 28-Aug-20

REF.: DSA A# - } INTERIOR ELEVATIONS (TYP. OFFICE 135 & 138) SCALE: 3/16" = 1'-0" 3

REF.: DSA A# - } INTERIOR ELEVATIONS (HALL 144) SCALE: 3/16" = 1'-0" 2

REF.: DSA A# - } INTERIOR ELEVATIONS (TYP. OFFICE 132 & 133) SCALE: 3/16" = 1'-0" 1

REF.: DSA A# - } INTERIOR ELEVATIONS (TYP. OFFICE 139, 140 & 141) SCALE: 3/16" = 1'-0" 6

REF.: DSA A# - } INTERIOR ELEVATIONS (TYP. OFFICE 136 & 137) SCALE: 3/16" = 1'-0" 5

REF.: DSA A# - } INTERIOR ELEVATIONS (OFFICE 142) SCALE: 3/16" = 1'-0" 4

IDENTIFICATION STAMP
DIV. OF THE STATE ARCHITECT
APP: 01-119031 INC:
REVIEWED FOR
SS ☑ FLS ☑ ACS ☑
DATE: 10/22/2020

REVISIONS	BY
1	
2	
3	
4	
5	
6	
7	
8	

Class Leasing
1320 W. Oleander Ave. Perris, CA 92571-7408
VOICE (951)943-1908 FAX (951)943-5768

ENGINEER

REGISTERED PROFESSIONAL ENGINEER
No. S3380
STRUCTURAL
STATE OF CALIFORNIA
08/31/2020

AOR

48'x40' OFFICE
BUILDING A1 & A2

SHEET TITLE:

DATE: 08-28-2020

DRAWN BY: ELMER / BERNNIE

SCALE: AS SHOWN

JOB:

SHEET NO: ALT-03

Plot by/Date/Time : Bernnie 26-Aug-20

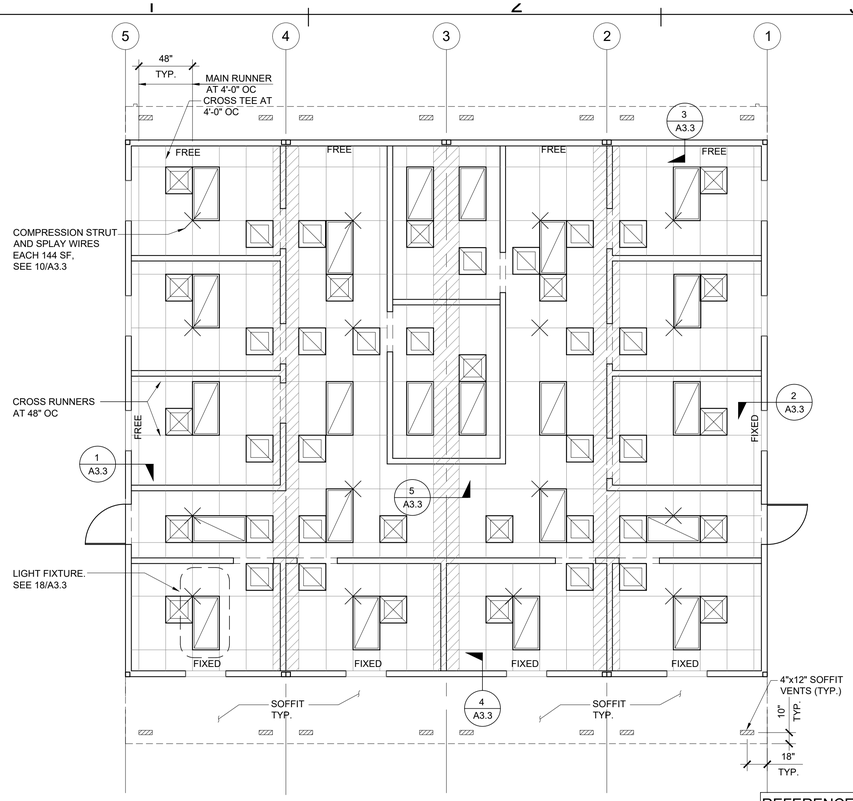

REFERENCE PC SHEET A3.2

REF.: DSA A# - }

REFLECTED CEILING PLAN

SCALE: 3/16" = 1'-0" | 2

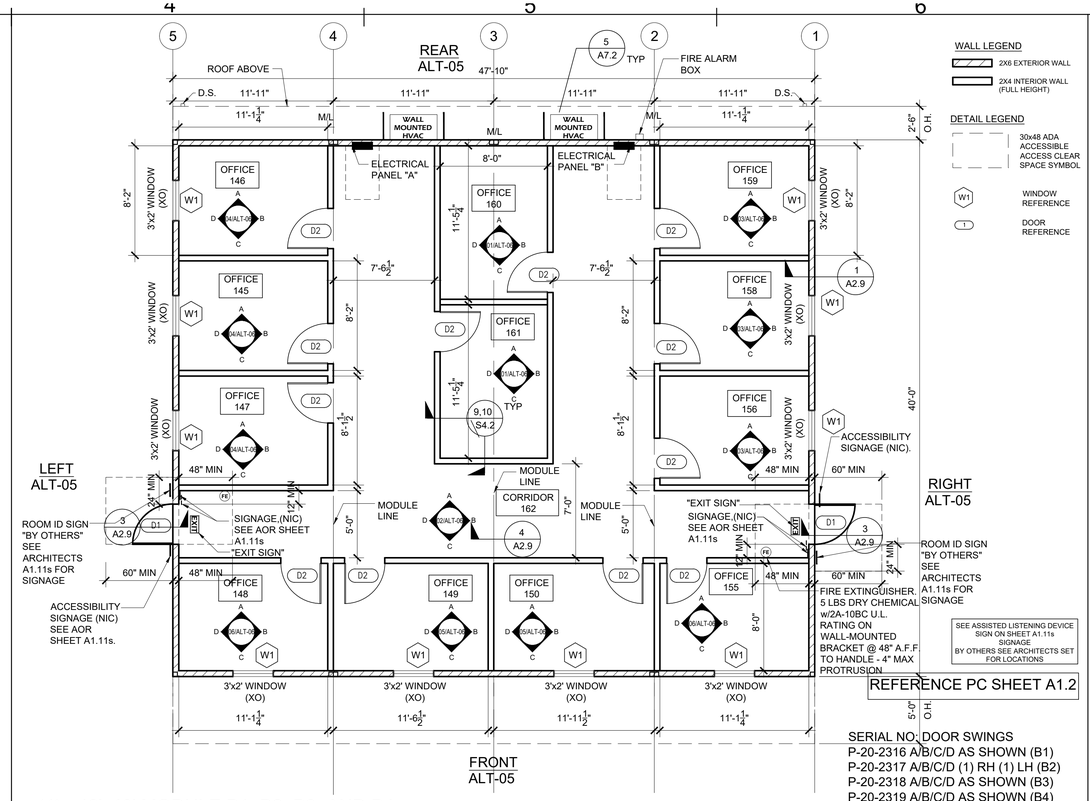

REFERENCE PC SHEET A1.2

(4) - 48'x40' MODULE B1, B2, B3, AND B4

SERIAL NO. DOOR SWINGS
P-20-2316 A/B/C/D AS SHOWN (B1)
P-20-2317 A/B/C/D (1) RH (1) LH (B2)
P-20-2318 A/B/C/D AS SHOWN (B3)
P-20-2319 A/B/C/D AS SHOWN (B4)
(SEE AOR SITE PLAN)

REF.: DSA A# - }

FLOOR PLAN

SCALE: 3/16" = 1'-0" | 1

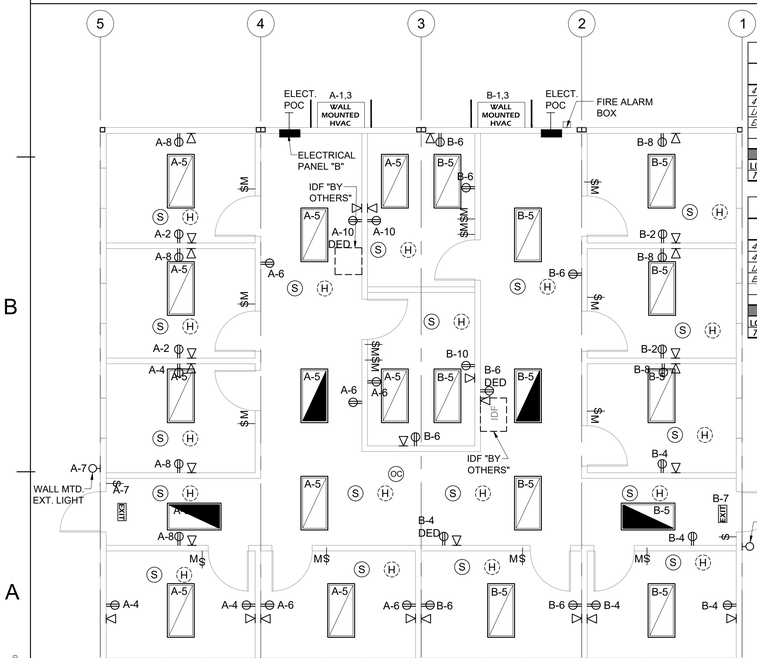

REFERENCE PC SH0EET E1.4

PANEL: A	PHASE:			VOLTS:		BUSS:			MAIN:			LOCATION:			FEED:				MOUNTING:
SUN:	SINGLE			120/240		125 AMP			125 AMP			INTERIOR			REAR				RECESSED
OBJECT DESCRIPTION	WAT PER	NO OF	LCL	WATTS A	WATTS B	BRK	POLE	WIRE SIZE	CKT NO	CKT A	CKT B	CKT NO	WIRE SIZE	POLE	BRK	WATTS A	WATTS B	LCL	NO OF	WAT PER	OBJECT DESCRIPTION
4 TON A/C	5428	1	x	5428		20	1	#12	1	X		2	#12	1	20	380		x	2	190	RECEPTS DUPLEX
4 TON A/C	5428	1	x		5428	20	1	#12	3	X		4	#12	1	20		540	x	3	190	RECEPTS DUPLEX
LIGHTS 2x4 (LED)	70	11	x	770		20	1	#12	5	X		6	#12	1	20	300		x	5	180	RECEPTS DUPLEX
EXIT: EXTERIOR LTS	60	2	x		120	20	1	#12	7	X		8	#12	1	20		2000	x	4	500	RECEPT (DUPLEX)DATA
				0					9	X		10	#12	1	20	500		x	1	500	RECEPT (DUPLEX)DATA
					0				11		X	12	#12	1	20		40	x	1	40	FIRE ALARM
LEG TOTALS				6198	5548											1280	2580	LEG TOTALS	

LCL=4021.5+16086=20107.5 — TOTAL WATTS=20107.5 — LEG BALANCE = 1.1% — TOTAL AMPS: 83.78

PANEL: B	PHASE:			VOLTS:		BUSS:			MAIN:			LOCATION:			FEED:				MOUNTING:
SUN:	SINGLE			120/240		125 AMP			125 AMP			INTERIOR			REAR				RECESSED
OBJECT DESCRIPTION	WAT PER	NO OF	LCL	WATTS A	WATTS B	BRK	POLE	WIRE SIZE	CKT NO	CKT A	CKT B	CKT NO	WIRE SIZE	POLE	BRK	WATTS A	WATTS B	LCL	NO OF	WAT PER	OBJECT DESCRIPTION
4 TON A/C	5428	1	x	5428		20	1	#12	1	X		2	#12	1	20	380		x	2	190	RECEPTS DUPLEX
4 TON A/C	5428	1	x		5428	20	1	#12	3	X		4	#12	1	20		900	x	5	180	RECEPTS DUPLEX
LIGHTS 2x4 (LED)	70	11	x	770		20	1	#12	5	X		6	#12	1	20	1260		x	7	180	RECEPTS DUPLEX
EXIT: EXTERIOR LTS	60	2	x		120	20	1	#12	7	X		8	#12	1	20		1500	x	3	500	RECEPT (DUPLEX)DATA
				0					9	X		10	#12	1	20	500		x	1	500	RECEPT (DUPLEX)DATA
					0				11	X		12					0				
LEG TOTALS				6198	5548											2120	2400	LEG TOTALS	

LCL=4066.5+16266=20332.5 — TOTAL WATTS=20332.5 — LEG BALANCE = 2.3% — TOTAL AMPS: 84.72

ELECTRICAL LEGEND

MOUNTING HEIGHTS PER 11B-308.1.1 , SWITCHES PER 11B-308.1.2

- 2x4 CEILING LIGHT WITH (3) T-8 LAMPS, LAY-IN FLUORESCENT LIGHT FIXTURE WITH DIMMABLE BALLAST ORACLE LIGHTING MODEL: 24-OT-3-32-T8-EMG-T8-BX-600-A12-L41K-C4. WATTAGE: 79W (3 LAMPS/32W/T8) OR EQUAL. EACH LIGHT FIXTURE WHICH IS INDICATED AS BEING AN EMERGENCY LIGHT SHALL HAVE A BALLAST BATTERY PACK INSTALLED ON THE FIXTURE. THE BATTERY PACK SHALL PROVIDE POWER TO A SINGLE LAMP WITHIN THE FIXTURE FOR NO LESS THAN 90 MINUTES. ANY LIGHT FIXTURE EQUIPPED WITH A BATTERY PACK SHALL BE WIRED IN SUCH A MANNER THAT THE BATTERY WILL BE ACTIVATED IMMEDIATELY UPON LOSS OF POWER TO THE FIXTURE. ADDITIONALLY THE BATTERY PACK SHALL BE OPERATED USING BATTERY POWER LIGHTING CONTROL SWITCHES AND SENSORS SHALL NOT BE ABLE TO SHUT THE FIXTURE OFF.
- 2x4 CEILING LIGHT WITH (3) T-8 LAMPS, LAY-IN FLUORESCENT LIGHT FIXTURE WITH ELECTRONIC BALLAST
- 1x4 CEILING LIGHT, LAY-IN FLUORESCENT LIGHT FIXTURE WITH ELECTRONIC BALLAST
- ELECTRICAL PANEL AT +60" AFF TO TOP OF PANEL WITH 1-1/2" DIA POWER STUB OUT
- $ LIGHT SWITCH. MOUNT AT +48" AFF TO TOP OF DEVICE (11b-308.1.1)
- $M MOTION LIGHT SWITCH. MOUNT AT +48" AFF TO TOP OF DEVICE (11B-308.1.1)
- 5SD J-BOX FOR FUTURE DATA- 1-1/4" CO STUB INTO ATTIC WITH PULLSTRING.
- 4SD J-BOX FOR FIRE ALARM PULLSTATION (DEVICE BY OTHERS). MOUNT AT +48" AFF TO PULL HANDLE OF DEVICE WITH 3/4" CONDUIT TO FIRE ALARM STROBE WITH PULLSTRING
- 4SD J-BOX FOR FIRE ALARM STROBE/HORN (DEVICE BY OTHERS). MOUNT AT +80" AFF TO BOTTOM OF DEVICE WITH 3/4" CONDUIT TO EXTERIOR FIRE ALARM HORN WITH PULLSTRING
- OC CEILING MOUNTED OCCUPANCY SENSOR WATTSTOPPER #LMPC-100 OR EQUAL
- EXIT EXIT SIGN WITH BATTERY BACK UP. EXIT SIGN REQUIRED FOR CLASSROOMS WITH TWO OR MORE EXTERIOR DOORS (CLASSROOMS WITH ONE EXTERIOR DOOR - OPTIONAL)
- RECESSED 4SD J-BOX W / COVER PLATE FOR FUTURE FIRE ALARM SYSTEM BY OTHERS. MOUNT AT +18" AFF U.O.N. TO CENTERLINE OF BOX AND PROVIDE 1" CO STUB TO ATTIC SPACE WITH PULLSTRING
- DUPLEX (WALL MOUNTED) RECEPTACLE 15A - 125V - 3 WIRE. MOUNT AT +18" AFF U.O.N. TO CENTERLINE OF DEVICE
- QUAD PLEX (WALL MOUNTED) RECEPTACLE 15A - 125V - 3 WIRE. MOUNT AT +18" AFF U.O.N. TO CENTERLINE OF DEVICE
- DUPLEX (CEILING MOUNTED) RECEPTACLE 15A - 125V - 3 WIRE.
- EXTERIOR LIGHT FIXTURE. MOUNT AT +93" AFF
- 4SD J-BOX FOR EXTERIOR FIRE ALARM HORN (DEVICE BY OTHERS). MOUNT AT +96" AFF TO CENTERLINE OF DEVICE WITH 3/4" CONDUIT TO FIRE ALARM BACKBOX WITH PULLSTRING
- S SMOKE DETECTOR 4-SD J-BOX ONLY - IN CEILING
- H HEAT DETECTOR 4-SD J-BOX ONLY
- SP CEILING MOUNTED SPEAKER
- CEILING MOUNTED DATA OUTLET
- WALL MOUNTED TELEPHONE OUTLET @ +18" A.F.F. UON
- PC CEILING MOUNTED PHOTOCELL, WATTSTOPPER #LMLS-500 OR EQUAL
- © CARBON MONOXIDE PER CBC SECTION 915
- CLOCK MOUNTED AT 90" A.F.F.
- FLOOR MOUNTED QUAD OUTLET & DATA

REF.: DSA A# - }

ELECTRICAL PLAN

SCALE: 3/16" = 1'-0" | 4

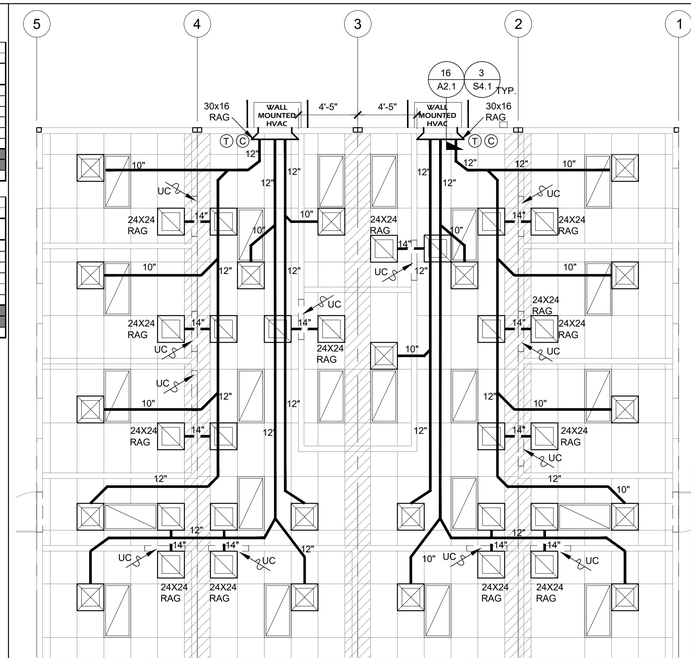

REFERENCE PC SHEET M7.1

REF.: DSA A# - }

MECHANICAL PLAN

SCALE: 3/16" = 1'-0" | 3

IDENTIFICATION STAMP
DIV. OF THE STATE ARCHITECT
APP: 01-119031 INC:
REVIEWED FOR
SS ☑ FLS ☑ ACS ☑
DATE: 10/22/2020

REVISIONS	BY
1	
2	
3	
4	
5	
6	
7	
8	

Class L Leasing
1320 W. Oleander Ave. Perris, CA 92571-7408
VOICE (951)943-1908 FAX (951)943-5768

ENGINEER

AOR

48'x40' OFFICE
BUILDING B1, B2, B3, B4

SHEET TITLE:

DATE: 08-28-2020

DRAWN BY: ELMER / BERNNIE

SCALE: AS SHOWN

JOB:

SHEET NO: ALT-04

Plot by/Date/Time : Bernnie 1--Sep--20

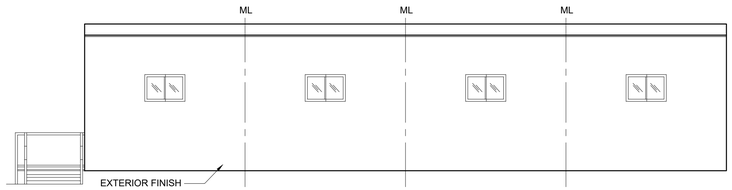

FRONT

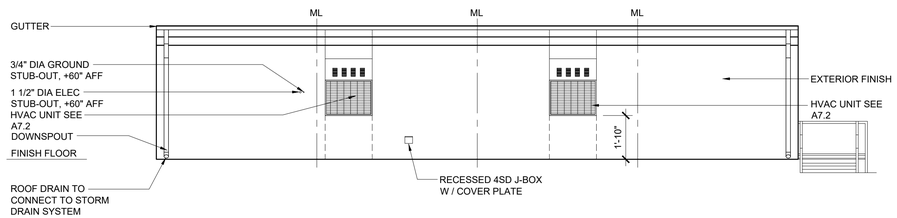

REAR

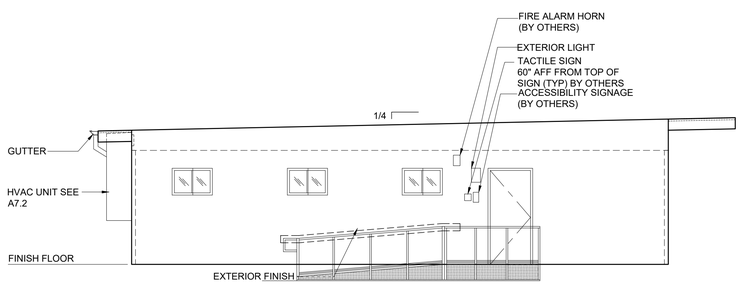

LEFT

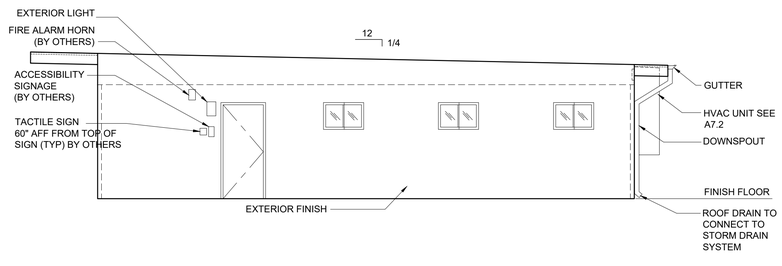

RIGHT

REFERENCE PC SHEET A5.0

REF.: DSA A# - }

EXTERIOR ELEVATIONS

SCALE: 3/16" = 1'-0"

1

IDENTIFICATION STAMP
DIV. OF THE STATE ARCHITECT
APP: 01-119031 INC:
REVIEWED FOR
SS ☑ FLS ☑ ACS ☑
DATE: 10/22/2020

REVISIONS	BY
1	
2	
3	
4	
5	
6	
7	
8	

Class Leasing
1320 W. Oleander Ave. Perris, CA 92571-7408
VOICE (951)943-1908 FAX (951)943-5768

ENGINEER

REGISTERED PROFESSIONAL ENGINEER
MANUEL D. FARCH
No. S3380
STRUCTURAL
STATE OF CALIFORNIA

08/31/2020

AOR

48'x40' OFFICE
BUILDING B1, B2, B3, B4

SHEET TITLE:

DATE: 08-28-2020

DRAWN BY: ELMER / BERNNIE

SCALE: AS SHOWN

JOB:

SHEET NO: ALT-05

Plot by/Date/Time : Bernnie 28-Aug-20

IDENTIFICATION STAMP
DIV. OF THE STATE ARCHITECT
APP: 01-119031 INC:
REVIEWED FOR
SS ☑ FLS ☑ ACS ☑
DATE: 10/22/2020

REVISIONS	BY
1	
2	
3	
4	
5	
6	
7	
8	

Class Leasing
1320 W. Oleander Ave. Perris, CA 92571-7408
VOICE (951)943-1908 FAX (951)943-5768

ENGINEER

REGISTERED PROFESSIONAL ENGINEER
No. S3380
STRUCTURAL
STATE OF CALIFORNIA
08/31/2020

AOR

48'x40' OFFICE
BUILDING B1, B2, B3, B4

SHEET TITLE:

DATE: 08-28-2020

DRAWN BY: ELMER / BERNNIE

SCALE: AS SHOWN

JOB:

SHEET NO: ALT-06

Plot by/Date/Time : Bernnie 26-Aug-20

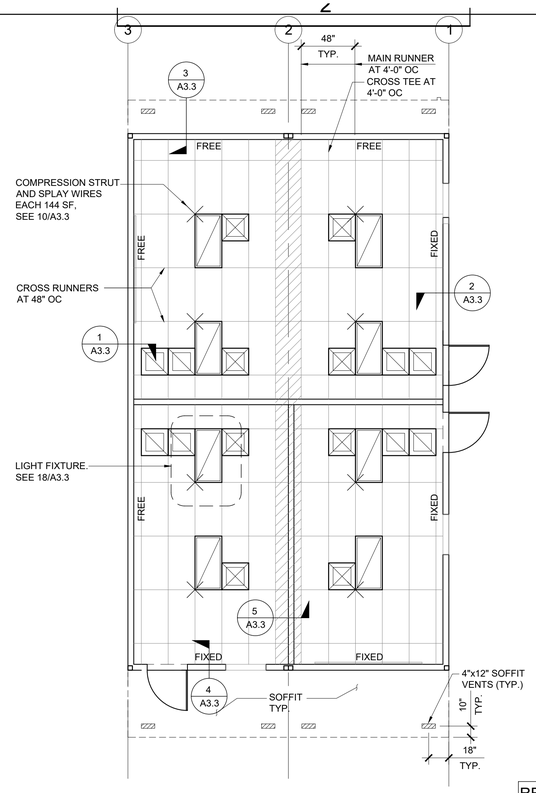

REFERENCE PC SHEET A3.2

REF.: DSA A# - } REFLECTED CEILING PLAN SCALE: 3/16" = 1'-0" 2

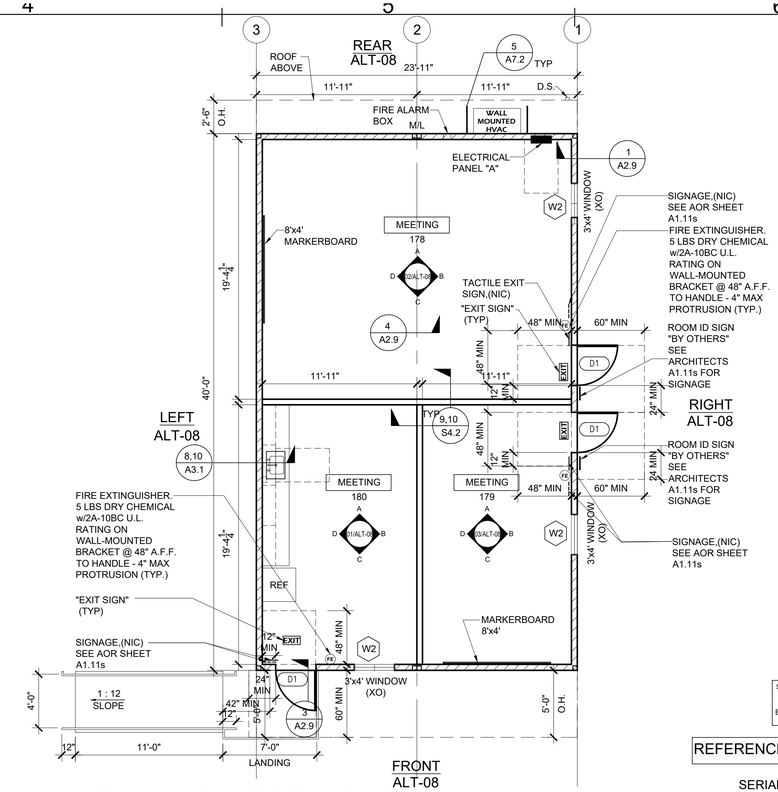

(1) - 28'x40' MULTI PURPOSE MODULE C

WALL LEGEND
- 2X6 EXTERIOR WALL
- 2X4 INTERIOR WALL (FULL HEIGHT)

DETAIL LEGEND
- 30x48 ADA ACCESSIBLE ACCESS CLEAR SPACE SYMBOL
- W1 WINDOW REFERENCE
- 1 DOOR REFERENCE

SEE ASSISTED LISTENING DEVICE SIGN ON SHEET A1.11s SIGNAGE BY OTHERS SEE ARCHITECTS SET FOR LOCATIONS

REFERENCE PC SHEET A1.2

SERIAL NO: DOOR SWINGS P-20-2320 A/B AS SHOWN

REF.: DSA A# - } FLOOR PLAN SCALE: 3/16" = 1'-0" 1

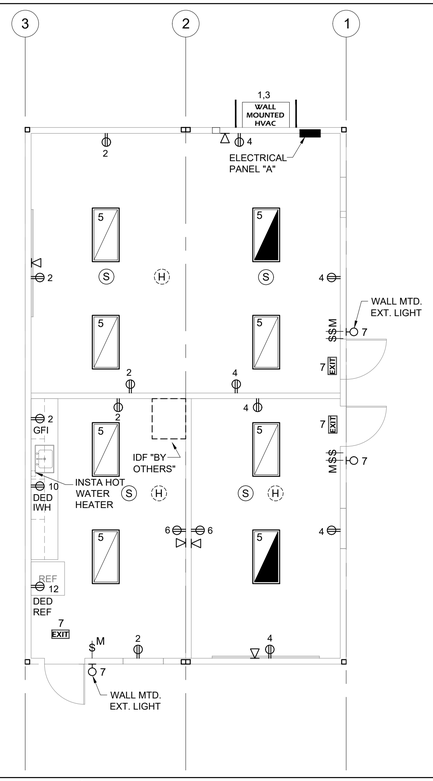

ELECTRICAL LEGEND

MOUNTING HEIGHTS PER 11B-308.1.1 , SWITCHES PER 11B-308.1.2

- 2x4 CEILING LIGHT WITH (3) T-8 LAMPS, LAY-IN FLUORESCENT LIGHT FIXTURE WITH DIMMABLE BALLAST ORACLE LIGHTING MODEL: 24-OT-3-32-T8-EMG-T8-BX-600-A12-L41K-C4 WATTAGE: 79W (3 LAMPS/32W/T8) OR EQUAL. EACH LIGHT FIXTURE WHICH IS INDICATED AS BEING AN EMERGENCY LIGHT SHALL HAVE A BALLAST BATTERY PACK INSTALLED ON THE FIXTURE. THE BATTERY PACK SHALL PROVIDE POWER TO A SINGLE LAMP WITHIN THE FIXTURE FOR NO LESS THAN 90 MINUTES. ANY LIGHT FIXTURE EQUIPPED WITH A BATTERY PACK SHALL BE WIRED IN SUCH A MANNER THAT THE BATTERY WILL BE ACTIVATED IMMEDIATELY UPON LOSS OF POWER TO THE FIXTURE. ADDITIONALLY THE BATTERY PACK SHALL BE OPERATED USING BATTERY POWER LIGHTING CONTROL SWITCHES AND SENSORS SHALL NOT BE ABLE TO SHUT THE FIXTURE OFF.
- 2x4 CEILING LIGHT WITH (3) T-8 LAMPS, LAY-IN FLUORESCENT LIGHT FIXTURE WITH ELECTRONIC BALLAST
- 1x4 CEILING LIGHT, LAY-IN FLUORESCENT LIGHT FIXTURE WITH ELECTRONIC BALLAST
- ELECTRICAL PANEL AT +60" AFF TO TOP OF PANEL WITH 1-1/2" DIA POWER STUB OUT
- $ LIGHT SWITCH. MOUNT AT +48" AFF TO TOP OF DEVICE (11b-308.1.1)
- $M MOTION LIGHT SWITCH. MOUNT AT +48" AFF TO TOP OF DEVICE (11B-308.1.1)
- 5SD J-BOX FOR FUTURE DATA- 1-1/4" CO STUB INTO ATTIC WITH PULLSTRING.
- 4SD J-BOX FOR FIRE ALARM PULLSTATION (DEVICE BY OTHERS). MOUNT AT +48" AFF TO PULL HANDLE OF DEVICE WITH 3/4" CONDUIT TO FIRE ALARM STROBE WITH PULLSTRING
- 4SD J-BOX FOR FIRE ALARM STROBE/HORN (DEVICE BY OTHERS). MOUNT AT +80" AFF TO BOTTOM OF DEVICE WITH 3/4" CONDUIT TO EXTERIOR FIRE ALARM HORN WITH PULLSTRING.
- OC CEILING MOUNTED OCCUPANCY SENSOR WATTSTOPPER #LMPC-100 OR EQUAL
- EXIT EXIT SIGN WITH BATTERY BACK UP. EXIT SIGN REQUIRED FOR CLASSROOMS WITH TWO OR MORE EXTERIOR DOORS (CLASSROOMS WITH ONE EXTERIOR DOOR - OPTIONAL)
- RECESSED 4SD J-BOX W / COVER PLATE FOR FUTURE FIRE ALARM SYSTEM BY OTHERS. MOUNT AT +18" AFF U.O.N. TO CENTERLINE OF BOX AND PROVIDE 1" CO STUB TO ATTIC SPACE WITH PULLSTRING
- DUPLEX (WALL MOUNTED) RECEPTACLE 15A - 125V - 3 WIRE. MOUNT AT +18" AFF U.O.N. TO CENTERLINE OF DEVICE
- QUAD PLEX (WALL MOUNTED) RECEPTACLE 15A - 125V - 3 WIRE. MOUNT AT +18" AFF U.O.N. TO CENTERLINE OF DEVICE
- DUPLEX (CEILING MOUNTED) RECEPTACLE 15A - 125V - 3 WIRE.
- EXTERIOR LIGHT FIXTURE. MOUNT AT +93" AFF
- H 4SD J-BOX FOR EXTERIOR FIRE ALARM HORN (DEVICE BY OTHERS). MOUNT AT +96" AFF TO CENTERLINE OF DEVICE WITH 3/4" CONDUIT TO FIRE ALARM BACKBOX WITH PULLSTRING
- S SMOKE DETECTOR 4-SD J-BOX ONLY - IN CEILING
- H HEAT DETECTOR 4-SD J-BOX ONLY
- SP CEILING MOUNTED SPEAKER
- CEILING MOUNTED DATA OUTLET
- WALL MOUNTED TELEPHONE OUTLET @ +18" A.F.F. UON
- PC CEILING MOUNTED PHOTOCELL, WATTSTOPPER #LMLS-500 OR EQUAL
- CO CARBON MONOXIDE PER CBC SECTION 915
- CLOCK MOUNTED AT 90" A.F.F.
- FLOOR MOUNTED QUAD OUTLET & DATA

PANEL: A	PHASE:			VOLTS:		BUSS:			MAIN:			LOCATION:			FEED:			MOUNTING:
SPA:	SINGLE			120/240		125 AMP			125 AMP			INTERIOR			REAR			RECESSED
OBJECT DESCRIPTION	WATT PER	NO. OF	LCL	WATTS A	WATTS B	BRK	POLE	WIRE SIZE	CKT NO	A	B	CKT NO	WIRE SIZE	POLE	BRK	WATTS A	WATTS B	LCL	NO OF	WATT PER	OBJECT DESCRIPTION
4 TON A/C	5428	1	x	5428		20	1	#12	1	X		2	#12	1	20	900		x	5	180	RECEPT(3)DUPLEX(GF)
4 TON A/C	5428	1	x		5428	20	1	#12	3		X	4	#12	1	20		1080	x	6	180	RECEPTS DUPLEX
LIGHTS:2x4 (LED)	70	8	x	560		20	1	#12	5	X		6	#12	1	20	1000		x	2	500	RECEPT (DUPLEX)DATA
EXIT/ EXTERIOR LTS	60	6	x		300	20	1	#12	7		X	8	#12	1	20		1000	x	1	1000	RECEPT (QUAD) DATA
FIRE ALARM	40	1	x	40		20	1	#12	9	X		10	#12	1	20	1500		x	1	1500	WATER HEATER
					0				11		X	12	#12	1	20		840	x	1	840	REFRIGERATOR
	LEG TOTALS			6028	5728											3440	2920	LEG TOTALS			

LCL=4524+18096=22620

TOTAL WATTS=23620 LEG BALANCE = 4.2% TOTAL AMPS: 94.25

REFERENCE PC SHEET E1.4

REF.: DSA A# - } ELECTRICAL PLAN SCALE: 3/16" = 1'-0" 4

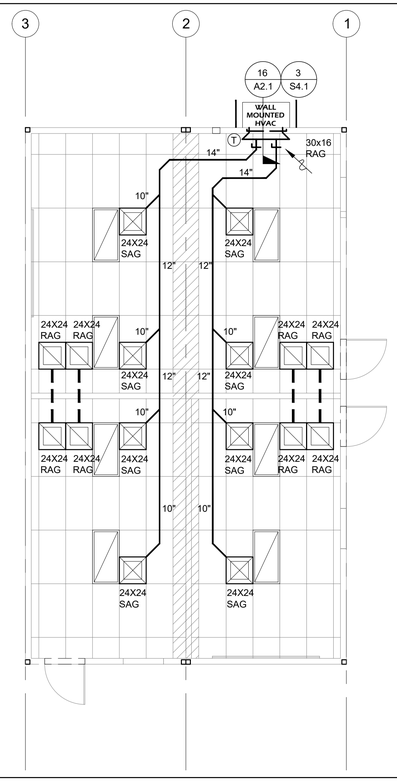

MECHANICAL LEGEND
- SUPPLY DUCT
- RETURN DUCT
- 12" NUMBER INDICATES DUCT SIZE
- SUPPLY REGISTER WITH INTEGRAL DAMPER
- RETURN REGISTER
- EXHAUST FAN
- T THERMOSTAT (TOP OF THERMOSTAT +48" AFF)
- DAMPER

REFERENCE PC SHEET M7.1

REF.: DSA A# - } MECHANICAL PLAN SCALE: 3/16" = 1'-0" 3

IDENTIFICATION STAMP
DIV. OF THE STATE ARCHITECT
APP: 01-119031 INC:
REVIEWED FOR
SS ☑ FLS ☑ ACS ☑
DATE: 10/22/2020

REVISIONS	BY
1	
2	
3	
4	
5	
6	
7	
8	

Class Leasing
1320 W. Oleander Ave. Perris, CA 92571-7408
VOICE (951)943-1908 FAX (951)943-5768

ENGINEER

REGISTERED PROFESSIONAL ENGINEER Manuel D. Fonseca No. S3380 STRUCTURAL STATE OF CALIFORNIA

08/31/2020

AOR

24'x40'
MULTI-PURPOSE BUILDING-C

SHEET TITLE:

DATE: 08-28-2020

DRAWN BY: ELMER / BERNNIE

SCALE: AS SHOWN

JOB:

SHEET NO: ALT-07

Plot by/Date/Time : Bernnie 26-Aug-20

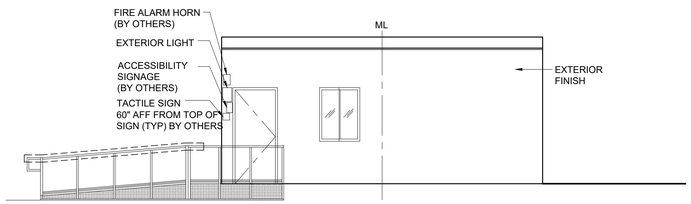

SEE ARCHITECTS SHEET A1.11s FOR SIGNAGE

FRONT

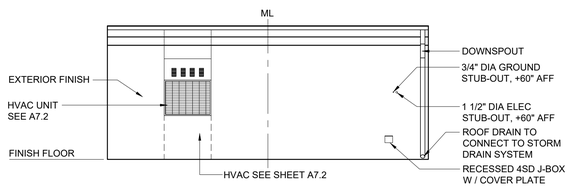

REAR

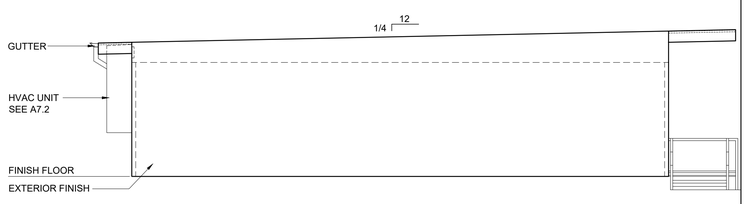

LEFT

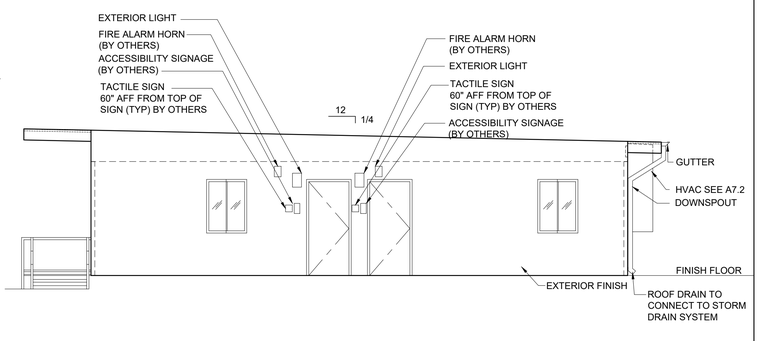

REFERENCE PC SHEET A5.1

RIGHT

REF.: DSA A# - } EXTERIOR ELEVATIONS SCALE: 3/16" = 1'-0" 5

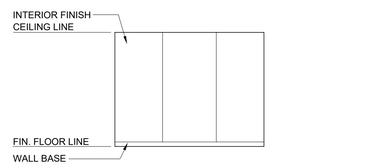

A

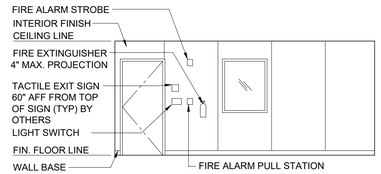

B

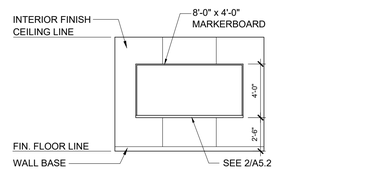

C

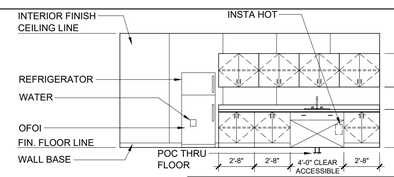

REFERENCE PC SHEET A5.2

D

REF.: DSA A# - } INTERIOR ELEVATIONS (MEETING 179) SCALE: 3/16" = 1'-0" 3

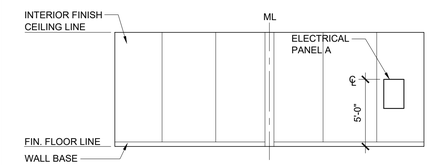

A

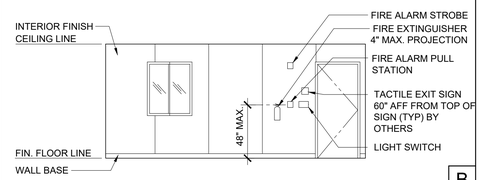

B

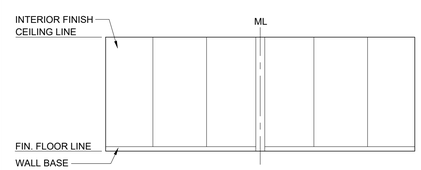

C

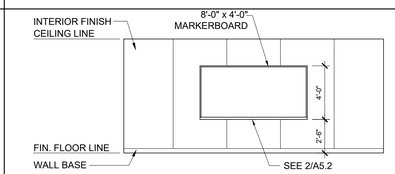

REFERENCE PC SHEET A5.2

D

REF.: DSA A# - } INTERIOR ELEVATIONS (MEETING 178) SCALE: 3/16" = 1'-0" 2

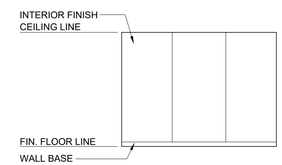

A

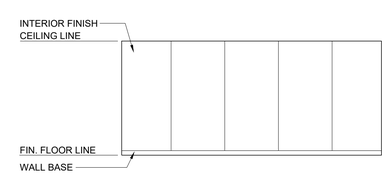

B

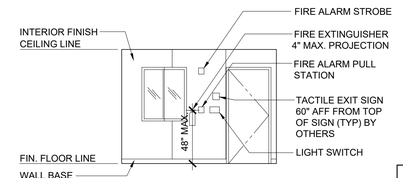

C

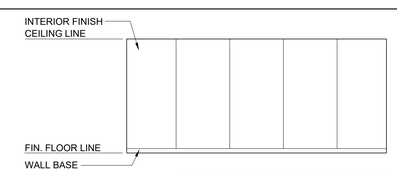

REFERENCE PC SHEET A5.2

D

REF.: DSA A# - } INTERIOR ELEVATIONS (MEETING 180) SCALE: 3/16" = 1'-0" 1

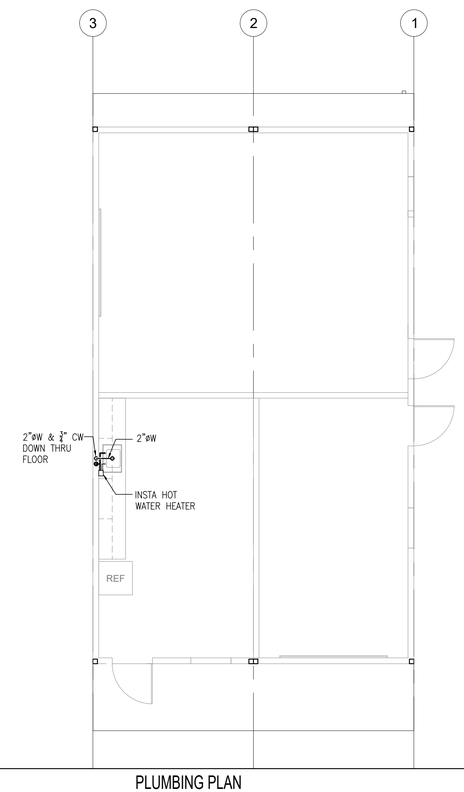

PLUMBING LEGEND

- WASTE
- VENT
- COLD WATER
- HOT WATER

REF.: DSA A# - } PLUMBING PLAN SCALE: 3/16" = 1'-0" 4

IDENTIFICATION STAMP
DIV. OF THE STATE ARCHITECT
APP: 01-119031 INC: N/A
REVIEWED FOR
SS ☑ FLS ☑ ACS ☑
DATE: 10/22/2020

REVISIONS	BY
1	
2	
3	
4	
5	
6	
7	
8	

Class L Leasing
1320 W. Oleander Ave. Perris, CA 92571-7408
VOICE (951)943-1908 FAX (951)943-5768

ENGINEER

REGISTERED PROFESSIONAL ENGINEER
MARK D. SCHUCH
No. S3380
STRUCTURAL
STATE OF CALIFORNIA

08/31/2020

AOR

24'x40'
MULTI-PURPOSE BUILDING-C

SHEET TITLE:

DATE: 08-28-2020

DRAWN BY: ELMER / BERNNIE

SCALE: AS SHOWN

JOB:

SHEET NO: ALT-08

Plot by/Date/Time : Bernnie 31-Aug-20

DOOR SCHEDULE

1

MARK	TYPE	WIDTH	HEIGHT	DOOR MATERIAL	FRAME TYPE	WALL THICKNESS	HARDWARE	QTY.
D1	D1	3'-0"	7'-0"	18GA HOLLOW METAL	WELDED FRAMING HOLLOW METAL	6"	HW1	7
D2	D2	3'-0"	7'-0"	SOLID CORE LEGACY WALNUT	KNOCKDOWN HOLLOW METAL	5"	HW2	22

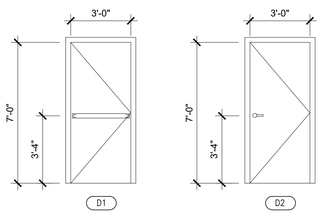

1. ALL DOORS SHALL COMPLY WITH CBC SECTION 11B-404 AND 1-3/4" THK (UNO)
2. CENTER ALL DOOR LEVERS FOR ACCESS AND LOCKING @ 40" ABOVE FINISH FLOOR. ALL HARDWARE SHALL OPEN FROM THE INTERIOR AND NOT REQUIRE ANY SPECIFIC KNOWLEDGE OF THE HARDWARE OR REQUIRE ANY SPECIAL EFFORT FOR EGRESS. THE LEVER OF LEVER-ACTUATED LEVERS OR LOCKS SHALL BE CURVED WITH A RETURN TO WITHIN 1/2" OF THE FACE OF THE DOOR TO PREVENT CATCHING ON THE CLOTHING (ETC.) OF PERSONS DURING EGRESS. THE LEVER OF LEVER-ACTUATED LEVERS OR LOCKS SHALL EXTEND AT A MINIMUM OF ONE-HALF THE DOOR WIDTH.
3. PER CBC 1010.1.10 FOR ANY ROOM CONFIGURATION WHICH PROVIDES AN OCCUPANT LOAD OF 50 OR GREATER SHALL NOT BE PROVIDED WITH A LATCH OR LOCK UNLESS IT IS PANIC HARDWARE OR FIRE EXIT HARDWARE AND COMPLY WITH ALL REQUIREMENTS OF SECTION 11B-309 OF THE CBC. ALL HARDWARE SHALL COMPLY WITH HARDWARE SCHEDULE THIS SHEET.
4. PER CBC 11B-309.4 THE FORCE REQUIRED TO ACTIVATE OPERABLE PARTS SHALL BE 5 POUNDS (22.2N) MAX.
5. PER CBC 11B-404.2.8.2 DOOR SPRING HINGES SHALL BE ADJUSTED SO THAT FROM THE OPEN POSITION OF 70 DEGREES. THE DOOR SHALL MOVE TO THE CLOSE POSITION IN 1.5 SECONDS MINIMUM. ALL CLOSER MUST COMPLY WITH CBC 11B-404.2.8.1 - DOOR CLOSER AND GATE CLOSERS SHALL BE ADJUSTED SO THAT FROM AN OPEN POSITION OF 90 DEGREES, THE TIME REQUIRED TO MOVE THE DOOR TO A POSITION OF 12 DEGREES FROM THE LATCH IS 5 SECONDS MINIMUM.
6. THE MAXIMUM AREA OF EXTERIOR WALL OPENING PER CBC TABLE 705.8 AND THE FIRE PROTECTION FOR EXTERIOR WALL PER CBC TABLE 602. ALL FIRE PROTECTION BASED ON THE FIRE SEPARATION DISTANCE.
7. DOOR LOCATION MAY VARY BASED ON PROJECT REQUIREMENTS.
8. (PH) ON PLANS THE SHEET INDICATED REQUIRED PANIC HARDWARE.
9. PROVIDE EXIT SIGNS AS REQUIRED PER CBC SECTION 1013.4. SEE DETAILS PER A0.2
10. ALL EXIT DOORS SHALL BE OPENABLE FROM INSIDE W/O ANY USE OF SPECIAL TOOLS, KNOWLEDGE OR EFFORT.

WINDOWS SCHEDULE

3

TYPE MARK	HEIGHT x WIDTH	FUNCTION	TYPE COMMENTS	GLAZING	WALL THICKNESS	QTY.	REMARKS
W1	2'-0" X 3'-0"	XOX	CLEAR ANODIZED ALUM. FRAME	*DP	6"	24	
W2	4'-0" X 3'-0"	XO	CLEAR ANODIZED ALUM. FRAME	*DP	6"	3	

WINDOW LOCATION MAY VARY BASED ON PROJECT REQUIREMENTS.

WINDOW - 3/4" INSULATING GLASS UNIT PERFORMANCE
U-VALUE: 0.35
SHGC: 0.24
VT: 0.5

NEW BUILDINGS THAT ARE INCLUDED IN PUBLIC SCHOOLS (KINDERGARTEN THROUGH 12TH GRADE) SHALL INCLUDE LOCKS THAT ALLOW DOORS TO CLASSROOMS AND ANY ROOM WITH AN OCCUPANCY OF FIVE OR MORE PERSONS TO BE LOCKED FROM THE INSIDE. THE LOCKS SHALL CONFORM TO THE SPECIFICATIONS AND REQUIREMENTS FOUND IN SECTION 1010.1.9 EDUCATION CODE 17.075.50.

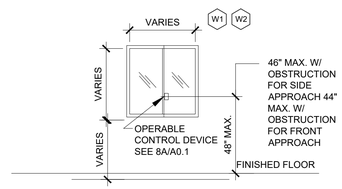

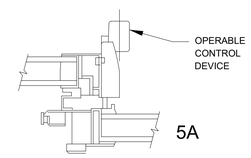

FINISH SCHEDULE

BUILDING	ROOM	FLOORING: FLOOR	FLOORING: BASE	WALL FINISH: WALL FINISH TYPE	CEILING: HEIGHT
48x40 OFFICE BLDG A1 & A2	132 - OFFICE	CARPET	4" RUBBER	½" VINYL TACKBOARD OVER GYP	8'-6"
	133 - OFFICE	CARPET	4" RUBBER	½" VINYL TACKBOARD OVER GYP	8'-6"
	135 - OFFICE	CARPET	4" RUBBER	½" VINYL TACKBOARD OVER GYP	8'-6"
	136 - OFFICE	CARPET	4" RUBBER	½" VINYL TACKBOARD OVER GYP	8'-6"
	137 - OFFICE	CARPET	4" RUBBER	½" VINYL TACKBOARD OVER GYP	8'-6"
	138 - OFFICE	CARPET	4" RUBBER	½" VINYL TACKBOARD OVER GYP	8'-6"
	139 - OFFICE	CARPET	4" RUBBER	½" VINYL TACKBOARD OVER GYP	8'-6"
	140 - OFFICE	CARPET	4" RUBBER	½" VINYL TACKBOARD OVER GYP	8'-6"
	141 - OFFICE	CARPET	4" RUBBER	½" VINYL TACKBOARD OVER GYP	8'-6"
	142 - OFFICE	CARPET	4" RUBBER	½" VINYL TACKBOARD OVER GYP	8'-6"
	144 - HALL	CARPET	4" RUBBER	½" VINYL TACKBOARD OVER GYP	8'-6"
48x40 OFFICE BLDG B1, B2, B3 & B4	145 - OFFICE	CARPET	4" RUBBER	½" VINYL TACKBOARD OVER GYP	8'-6"
	146 - OFFICE	CARPET	4" RUBBER	½" VINYL TACKBOARD OVER GYP	8'-6"
	147 - OFFICE	CARPET	4" RUBBER	½" VINYL TACKBOARD OVER GYP	8'-6"
	148 - OFFICE	CARPET	4" RUBBER	½" VINYL TACKBOARD OVER GYP	8'-6"
	149 - OFFICE	CARPET	4" RUBBER	½" VINYL TACKBOARD OVER GYP	8'-6"
	150 - OFFICE	CARPET	4" RUBBER	½" VINYL TACKBOARD OVER GYP	8'-6"
	155 - OFFICE	CARPET	4" RUBBER	½" VINYL TACKBOARD OVER GYP	8'-6"
	156 - OFFICE	CARPET	4" RUBBER	½" VINYL TACKBOARD OVER GYP	8'-6"
	158 - OFFICE	CARPET	4" RUBBER	½" VINYL TACKBOARD OVER GYP	8'-6"
	159 - OFFICE	CARPET	4" RUBBER	½" VINYL TACKBOARD OVER GYP	8'-6"
	160 - OFFICE	CARPET	4" RUBBER	½" VINYL TACKBOARD OVER GYP	8'-6"
	161 - OFFICE	CARPET	4" RUBBER	½" VINYL TACKBOARD OVER GYP	8'-6"
	162 - CORR.	CARPET	4" RUBBER	½" VINYL TACKBOARD OVER GYP	8'-6"
24x40 MULTI-PURPOSE BLDG C	178 - MEETING ROOM	CARPET	4"	½" VINYL TACKBOARD OVER GYP	8'-6"
	179 - MEETING ROOM	CARPET	4"	½" VINYL TACKBOARD OVER GYP	8'-6"
	180 - BREAK ROOM	CARPET	4"	½" VINYL TACKBOARD OVER GYP	8'-6"

REFERENCE PC SHEET A0.1

CLASS LEASING
JOB# LAS POSITAS COLLEGE
******* PRIMUS CORES BY OTHERS *******

QTY	DESCRIPTION
	(2) 48 X 40 MODULE A
	EXT CLASSROOM DOORS D1
2	**HMD 507 3070 1-3/4 18GA PF/CUR 345 X 161**
2	**HMF C KDDW 3070 8-1/4" 16GA PF/CUR 345 X ASA X CLOSER REINF**
6	TAH BB179 4.5 X 4.5 NRP 626
2	SCHLAGE ND91JD RHO 626
2	NORTON 8501DA 689
2	PEMCO 315CN 36
2	HAGER 891SAV 3684
2	HAGER 428SA 36
2	SCHLAGE 23-030 C123 626 1-BITTED
	INT OFFICES DOORS D2
10	LEG WAL 3070 1-3/4" SC PF/CUR 345 X 161
10	HMF C KDDW 3070 6-5/8" 16GA PF/CUR 345 X ASA X CLOSER REINF
30	TAH BB179 4.5 X 4.5 NRP 626
10	SCHLAGE ND91JD RHO 626
10	NORTON 8501DA 689
10	HAGER 236W 630
10	SCHLAGE 23-030 C123 626 1-BITTED
	(4) 48 X 40 MODULE B
	EXT CLASSROOM DOORS D1
2	**HMD 507 3070 1-3/4 18GA PF/CUR 345 X 161**
2	**HMF C KDDW 3070 8-1/4" 16GA PF/CUR 345 X ASA X CLOSER REINF**
6	TAH BB179 4.5 X 4.5 NRP 626
2	SCHLAGE ND91JD RHO 626
2	NORTON 8501DA 689
2	PEMCO 315CN 36
2	HAGER 891SAV 3684
2	HAGER 428SA 36
2	SCHLAGE 23-030 C123 626 1-BITTED
	INT OFFICES DOORS D2
12	LEG WAL 3070 1-3/4" SC PF/CUR 345 X 161
12	HMF C KDDW 3070 6-5/8" 16GA PF/CUR 345 X ASA X CLOSER REINF
36	TAH BB179 4.5 X 4.5 NRP 626
12	SCHLAGE ND91JD RHO 626
12	NORTON 8501DA 689
12	HAGER 236W 630
12	SCHLAGE 23-030 C123 626 1-BITTED
	(1) 28 X 40 MODULE C
	EXT CLASSROOM DOORS D1
3	**HMD 507 3070 1-3/4 18GA PF/CUR 345 X 161**
3	**HMF C KDDW 3070 8-1/4" 16GA PF/CUR 345 X ASA X CLOSER REINF**
9	TAH BB179 4.5 X 4.5 NRP 626
3	SCHLAGE ND91JD RHO 626
3	NORTON 8501DA 689
3	PEMCO 315CN 36
3	HAGER 891SAV 3684
3	HAGER 428SA 36
3	SCHLAGE 23-030 C123 626 1-BITTED

DOOR HARDWARE 2

Plot by/Date/Time : Bernnie 26-Aug-20

IDENTIFICATION STAMP
DIV. OF THE STATE ARCHITECT
APP: 01-119031 INC:
REVIEWED FOR
SS ☑ FLS ☑ ACS ☑
DATE: 10/22/2020

REVISIONS	BY
1	
2	
3	
4	
5	
6	
7	
8	

Class Leasing
1320 W. Oleander Ave. Perris, CA 92571-7408
VOICE (951)943-1908 FAX (951)943-5768

ENGINEER
REGISTERED PROFESSIONAL ENGINEER Manny D. Fonseca No. S3380 STRUCTURAL STATE OF CALIFORNIA
08/31/2020

AOR

ALTERATION

SHEET TITLE:

DATE: 08-28-2020

DRAWN BY: ELMER / BERNNIE

SCALE: AS SHOWN

JOB:

SHEET NO: ALT-D1